PART 2: STANDARD DETAILS
TABLE OF CONTENTS

NAME	NUMBER
GENERAL DETAILS	
BANNER DETAIL	G-01
TEMPORARY CONSTRUCTION SITE SIGN BOARD (4'x4')	G-02
TEMPORARY H.U.D. CONSTRUCTION SITE SIGN BOARD (4'x4')	G-04
TEMPORARY CONSTRUCTION SITE SIGN BOARD (4'x8')	G-05
WSDOT STANDARD PLANS (INCLUDED BY REFERENCE ONLY)	
PULL BOX (CITY TELECOMMUNCATIONS PULL BOX)	J-90.10
SMALL CABLE VAULT (CITY TELECOMMUNCATIONS SPLICE VAULT)	J-90.20
TEMPORARY EROSION AND SEDIMENT CONTROL (TESC) DETAILS **For additional TESC details and figures see the City of Auburn SWMM**	
TEMPORARY CONSTRUCTION ENTRANCE/EXIT	E-01
SILT CONTROL FENCE	E-02
CATCH BASIN INLET PROTECTION	E-03
ALTERNATE CATCH BASIN INLET PROTECTION	E-04
GRADING/EROSION DISCHARGE CONTROL STRUCTURE	E-05
TRAFFIC DETAILS	
TYPICAL PIPE TRENCH BACKFILL	T-01
EXISTING ROADWAY RESTORATION OF UTILITY TRENCHES	T-02
TYPICAL BOLLARD INSTALLATION	T-03
DRIVEWAY WIDTHS AND LOCATION	T-04
ADJUSTMENT OF NEW AND EXISTING UTILITY STRUCTURES TO FINISH GRADE	T-05
STREET TREE IN LANDSCAPE STRIP	T-06
NEIGHBORHOOD DELIVERY AND COLLECTION BOX UNIT (N.D.C.B.U.) INSTALLATION	T-07
NEIGHBORHOOD DELIVERY & COLLECTION BOX UNIT (N.D.C.B.U.) SINGLE UNIT	T-08
NEIGHBORHOOD DELIVERY & COLLECTION BOX UNIT (N.D.C.B.U.) MULTIPLE UNITS	T-09
POURED IN PLACE MONUMENT TYPE 'B' MODIFIED	T-11
DOUBLE CENTERLINE WITH RAISED PAVEMENT MARKERS	T-12
SIDEWALK WITH LANDSCAPE STRIP	T-13
PERVIOUS SIDEWALK WITH LANDSCAPE STRIP	T-14
CEMENT CONCRETE SIDEWALK WITHOUT LANDSCAPE STRIP	T-15
BICYCLE LANE MARKINGS	T-17
LUMINAIRE AND CONDUIT LAYOUT DETAIL	T-18
LUMINAIRE POLE	T-19
UNIFORM LUMINAIRE WIRING DETAIL	T-20
POWER SERVICE CABINET DETAIL	T-21
TRAFFIC SIGNAL CONTROLLER & FOUNDATION DETAIL	T-22
TELLECOMMUNICATION AND LUMINAIRE ELECTRICAL TRENCH DETAIL	T-23
TYPICAL SIGN POST INSTALLATION	T-24
MAST ARM MOUNTED, STREET NAME SIGN DETAIL	T-25
POST MOUNTED, STREET NAME SIGN DETAIL	T-26

NAME	NUMBER
REPAIR OF EXISTING CEMENT CONCRETE PANEL IN ROADWAY	T-27
DOWNTOWN PEDESTRIAN POLE MOUNT LIGHTING STANDARD	T-28,28A,28B
LOCAL RESIDENTIAL ORNAMENTAL STREET LIGHTING STANDARD	T-29
TYPICAL PLAN FOR TREE GRATE	T-30
PRIVATE ACCESS ROAD / SHARED DRIVEWAY	T-31
PRECAST CONCRETE DUAL FACED SLOPED MOUNTABLE CURB	T-32
WSDOT STANDARD PLANS (INCLUDED BY REFERENCE ONLY)	
BEAM GUARDRAIL TYPES 1 - 4 (W BEAM)	C-1
BEAM GUARDRAIL ANCHOR TYPE 1	C-6
CEMENT CONCRETE CURBS	F-10.12
PARALELL CURB RAMP	F-40.12
PERPENDICULAR CURB RAMP	F-40.15
SINGLE DIRECTION CURB RAMP	F-40.16
DETECTABLE WARNING SURFACE	F-45.10
CEMENT CONCRETE DRIVEWAY ENTRANCE TYPES 1, 2,3, & 4	F-80.10
LOCKING LID STANDARD JUNCTION BOX TYPES 1 & 2	J-40.10
TYPE 3 BARRICADE	K-80.20
LEFT TURN CHANNELIZATION REDUCED TAPERS	M-3.20
TWO-WAY LEFT TURN AND MEDIAN CHANNELIZATION	M-3.40
DOUBLE LEFT-TURN CHANNELIZATION	M-3.50
RIGHT TURN CHANNELIZATION	M-5.10
BICYCLE LANE SYMBOL LAYOUT	M-9.50
RAILROAD CROSSING LAYOUT	M-11.10
CROSSWALK LAYOUT	M-15.10
LONGITUDINAL MARKING PATTERNS	M-20.10
SYMBOL MARKINGS - TRAFFIC ARROWS FOR LOW-SPEED ROADWAYS	M-24.40
SANITARY SEWER AND STORM DRAIN DETAILS	
SIDE SEWER STUB	S-01
PRIVATE SANITARY SIDE SEWER CLEAN OUT	S-02
PUBLIC SIDE SEWER CLEANOUT (8" OR LARGER)	S-03
24" DIA. MANHOLE FRAME AND COVER	S-04
RETROFIT EXISTING MANHOLE WITH INSIDE DROP	S-05
EXTRA SHALLOW MANHOLE DETAIL	S-06
MANHOLE AT END OF SANITARY SEWER LINE	S-07
MANHOLE CHANNEL CONSTRUCTION	S-08
FLOW RESTRICTOR (TEE)	S-09,9a
WSDOT STANDARD PLANS (INCLUDED BY REFERENCE ONLY)	
CATCH BASIN TYPE 1	B-5.20
CATCH BASIN TYPE 2	B-10.20
MANHOLE TYPE 1	B-15.20
MANHOLE TYPE 2	B-15.40
COMBINATION INLET	B-25.20
CONCRETE INLET	B-25.60

NAME	NUMBER
CEMENT CONCRETE CURB AND GUTTER PAN	F-10.16
WATER DETAILS	
WATER MAIN BLOCKING	W-01
TYPICAL AIR AND VACUUM RELIEF VALVE DETAIL	W-02
2" PERMANENT BLOW OFF ASSEMBLY	W-03
TEMPORARY BLOW OFF DETAIL	W-04
WATER SAMPLING STATIONING DETAIL	W-05
IRRIGATION FROM DOMESTIC SERVICE LINE WITH DCVA UP TO 2" (SINGLE FAMILY)	W-06
5 1/4" M.V.O. HYDRANT SETTING DETAIL	W-07
FIRE HYDRANT LOCATION IN CUT OR FILL W/ GUARD POSTS	W-08
3/4" TO 3" FIRE SPRINKLER LINES WITH DOMESTIC SERVICE LINE	W-09
PRESSURE REDUCING VALVE STATION FOR 8" DIA. WATER LINE	W-10,10a,10b
PRESSURE REDUCING VALVE STATION FOR 10" DIA. WATER LINE	W-11,11a,11b
PRESSURE REDUCING VALVE STATION FOR 12" DIA. WATER LINE	W-12,12a,12b
1" WATER METER INSTALLATION	W-13
1 1/2" & 2" WATER METER INSTALLATION	W-14
WATER METER LOCATION & MATERIAL SCHEDULE	W-15
3" OR LARGER WATER METER INSTALLATION	W-16,16a
VALVE WRENCH EXTENSION BOX	W-17
C.I. VALVE BOX TOP & VALVE BOX COVER	W-18
5" C.I. SOIL PIPE VALVE BOX EXTENSION & C.I. VALVE BOX BOTTOM	W-19
NON-SINGLE FAMILY SERVICE LINES	W-20
TEMP. COMBINATION HYDRANT METER/ REDUCED PRESSURE BACKFLOW ASSY.	W-21
REDUCED PRESSURE BACKFLOW ASSY. (OUTSIDE INSTALLATION)	W-22
REDUCED PRESSURE BACKFLOW ASSY. (INSIDE INSTALLATION)	W-23
DOUBLE CHECK VALVE ASSEMBLY (OUTSIDE INSTALLATION)	W-24
DOUBLE CHECK VALVE ASSEMBLY (INSIDE INSTALLATION)	W-25

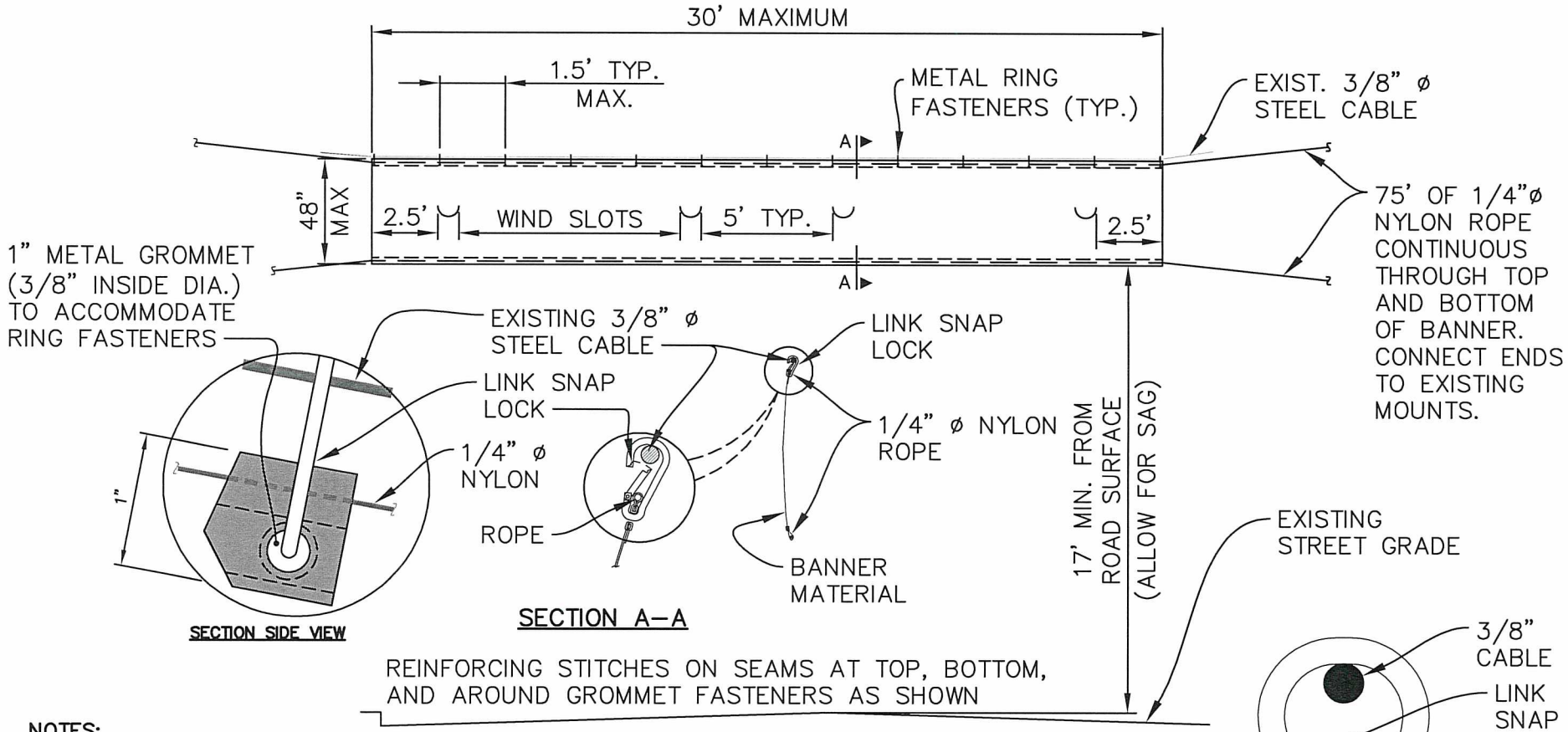

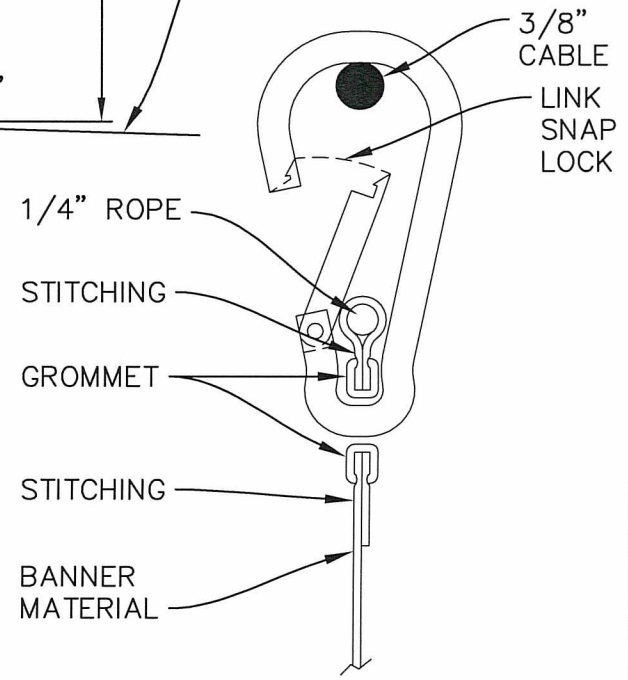

3-1/4" LINK SNAP LOCK (20)
NOT TO SCALE

NOTES:

1. WIND SLOT SHALL BE 6" DIAMETER HALF CIRCLE, MINIMUM. THEY MAY BE LOCATED IN AREAS WHICH DO NOT DETRACT FROM THE BANNER.
2. WIND SLOTS SHALL BE SPACED ONE SLOT PER 5 FT. OF BANNER LENGTH.
3. BANNER SHALL BE DURABLE TEARING RESISTANT MATERIAL, I.E., NYLON, ETC.
4. BANNER SHALL BE CONNECTED TO EXISTING CABLE WITH DETACHABLE METAL METAL RINGS, CURTAIN TYPE RINGS WILL NOT BE ALLOWED.
5. REINFORCING STITCHES SHALL BE PROVIDED ON SEAMS AT TOP, BOTTOM, AND AROUND GROMMET FASTENERS AS SHOWN.
6. WIND SLOTS SHALL HAVE REINFORCING SEAMS AROUND FULL SLOT LENGTH TO PREVENT TEARING.
7. METAL RINGS SHALL BE SUBMITTED FOR APPROVAL AT TIME OF APPLICATION FOR PERMIT.
8. BANNER CONSTRUCTION SHALL BE APPROVED BY THE CITY ENGINEER PRIOR TO ISSUANCE OF PERMIT.

APPROVED BY CITY ENGINEER:

DATE: 8/5/2016

CITY OF AUBURN WASHINGTON

BANNER DETAIL

COMMUNITY DEVELOPMENT & PUBLIC WORKS DEPT.

STANDARD DETAIL: G-01.1

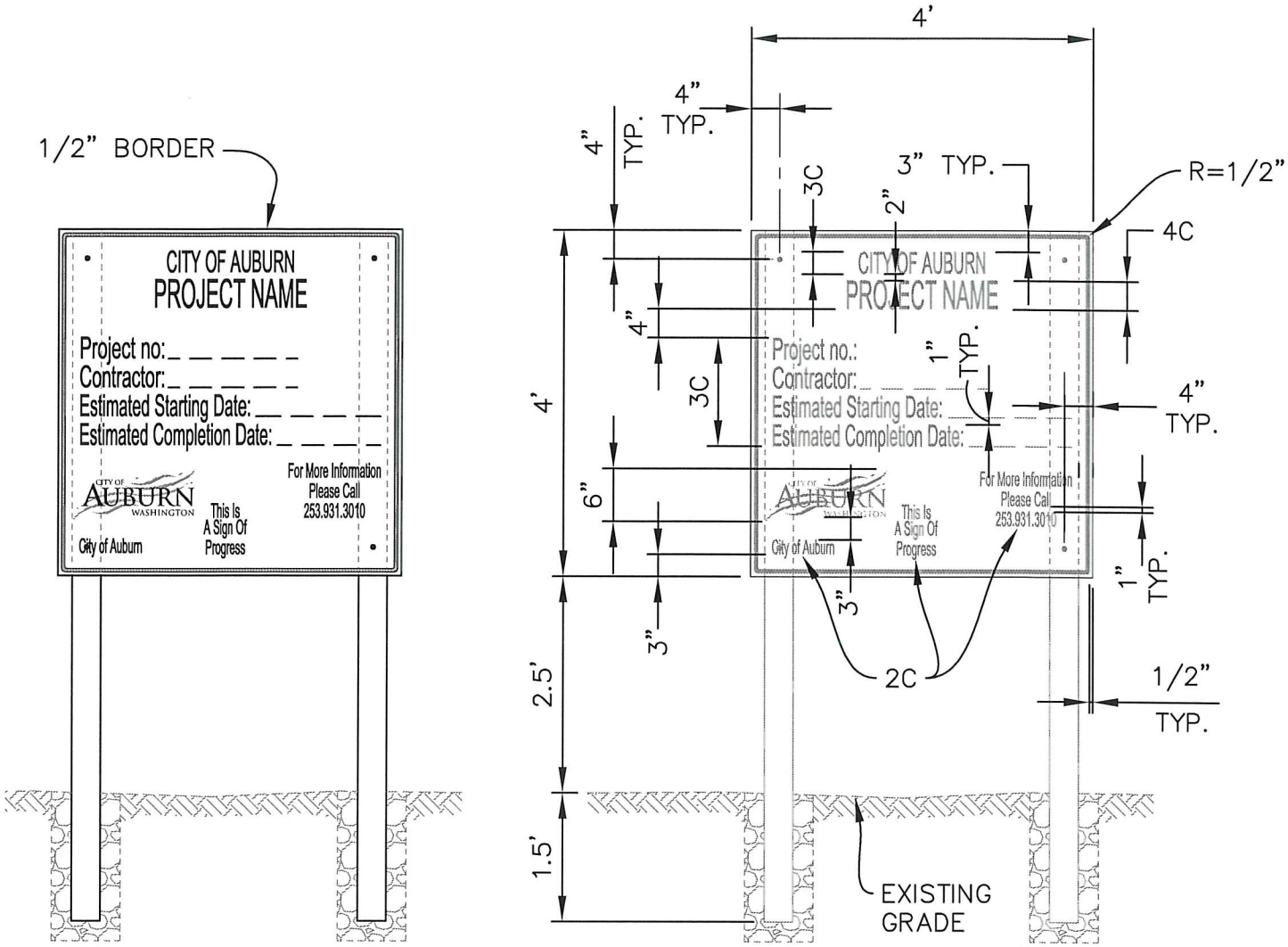

CONSTRUCTION NOTES:

1. SIGN BOARD SHALL BE CONSTRUCTED FROM 4'x4'x3/4" EXTERIOR MARINE PLYWOOD.
2. ALL LETTERS AND NUMERALS SHALL BE SERIES C.
3. LETTERING SHALL BE BLACK ON WHITE BACKGROUND USING 3M SCOTCHLITE EC FILM SERIES 1700 OVER 3M DIAMOND GRADE VIP OR BETTER.
4. SIGN AND POSTS SHALL BE PLANTED INTO AN UNYIELDING SOIL AND REINFORCED BY TAMPING GRAVEL OR SMALL ROCKS WHEN NECESSARY TO ASSURE RESISTANCE AGAINST STRONG WIND. BRACING MAY BE REQUIRED AT SOME LOCATIONS AS DIRECTED BY THE ENGINEER.
5. SIGN BOARD SHALL BE FABRICATED AND MOUNTED ON 2 EACH 4"x4"x8' POSTS WITH THE FOLLOWING GALVANIZED FASTENERS AND SIZES AS INDICATED:

   4 EA. 1/4" DIA.x6"

   4 EA. 1/4" NUTS

   8 EA. 1/4" WASHERS

APPROVED BY CITY ENGINEER:	DATE: 8/5/2016	CITY OF AUBURN WASHINGTON	TEMPORARY CONSTRUCTION SITE SIGN BOARD (4'x4')
COMMUNITY DEVELOPMENT & PUBLIC WORKS DEPT.			STANDARD DETAIL: G-02.1

Plotted by: Craig Dobyne on 7/13/2016 File location: M:\Construction Standard Details\Approved Drawing Files (dwg)\General\STDETL-G-02.1

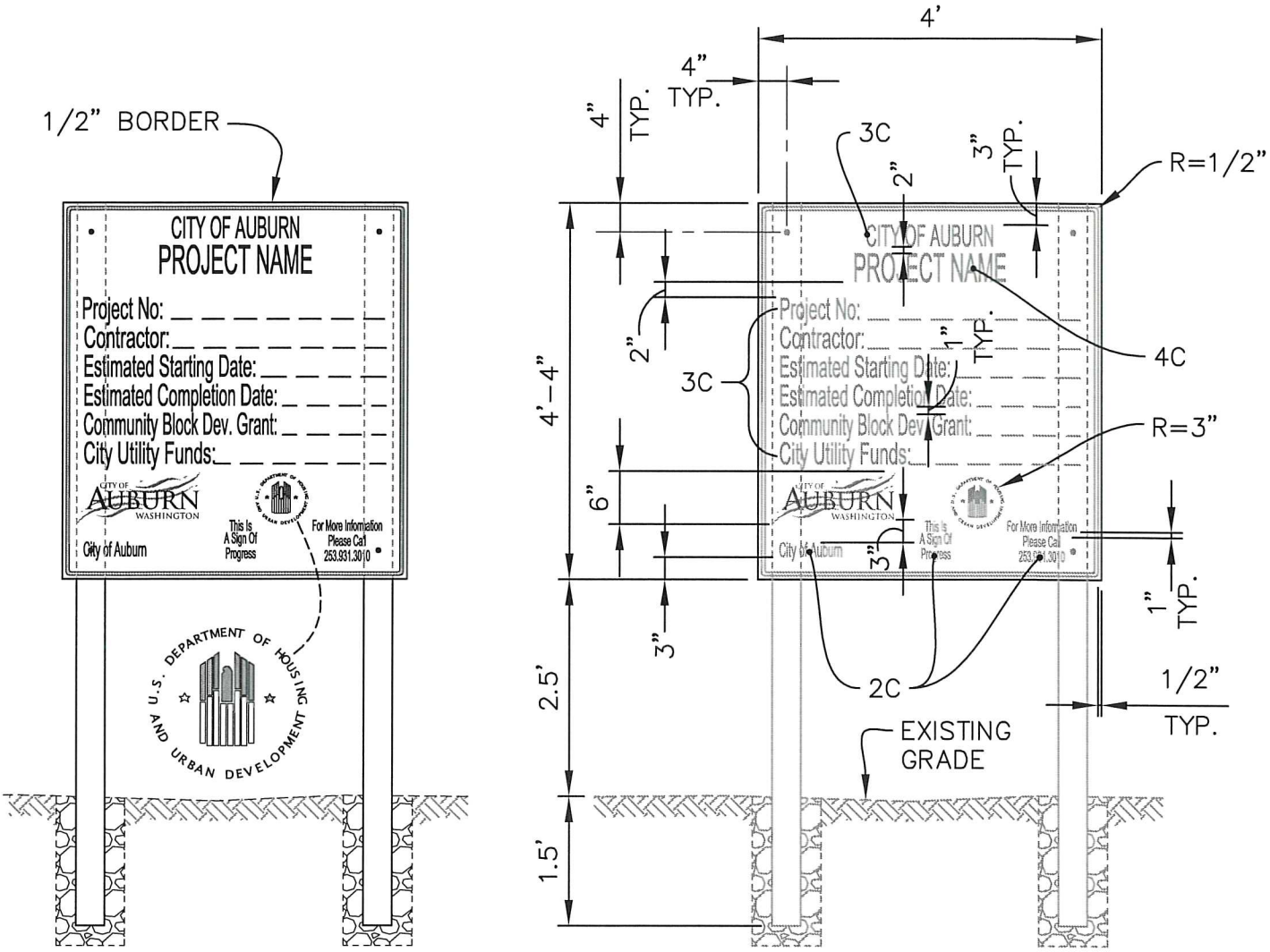

CONSTRUCTION NOTES:

1. SIGN BOARD SHALL BE CONSTRUCTED FROM 3/4" EXTERIOR MARINE PLYWOOD.
2. ALL LETTERS AND NUMERALS SHALL BE SERIES C.
3. LETTERING SHALL BE BLACK ON WHITE BACKGROUND USING 3M SCOTCHLITE EC FILM SERIES 1700 OVER 3M DIAMOND GRADE VIP OR BETTER.
4. SIGN AND POSTS SHALL BE PLANTED INTO AN UNYIELDING SOIL AND REINFORCED BY TAMPING GRAVEL OR SMALL ROCKS WHEN NECESSARY TO ASSURE RESISTANCE AGAINST STRONG WIND. BRACING MAY BE REQUIRED AT SOME LOCATIONS AS DIRECTED BY THE ENGINEER.
5. SIGN BOARD SHALL BE FABRICATED AND MOUNTED ON 2 EACH 4"x4"x8' POSTS WITH THE FOLLOWING GALVANIZED FASTENERS AND SIZES AS INDICATED:

   4 EA. 1/4" DIA.x6"

   4 EA. 1/4" NUTS

   8 EA. 1/4" WASHERS

APPROVED BY CITY ENGINEER:	DATE: 8/5/2016	CITY OF AUBURN WASHINGTON	TEMPORARY H.U.D. CONSTRUCTION SITE SIGN BOARD (4'x4')
COMMUNITY DEVELOPMENT & PUBLIC WORKS DEPT.			STANDARD DETAIL: G-04.1

Plotted by: Craig Dobyns on 7/13/2016 File location: M:\Construction Standard Details\Approved Drawing Files (dwg)\General\STDETL-G-04.1

Plotted by: Craig Dobyns on 7/13/2016 File location: M:\Construction Standard Details\Approved Drawing Files (dwg)\General\STDETL-G-05.1

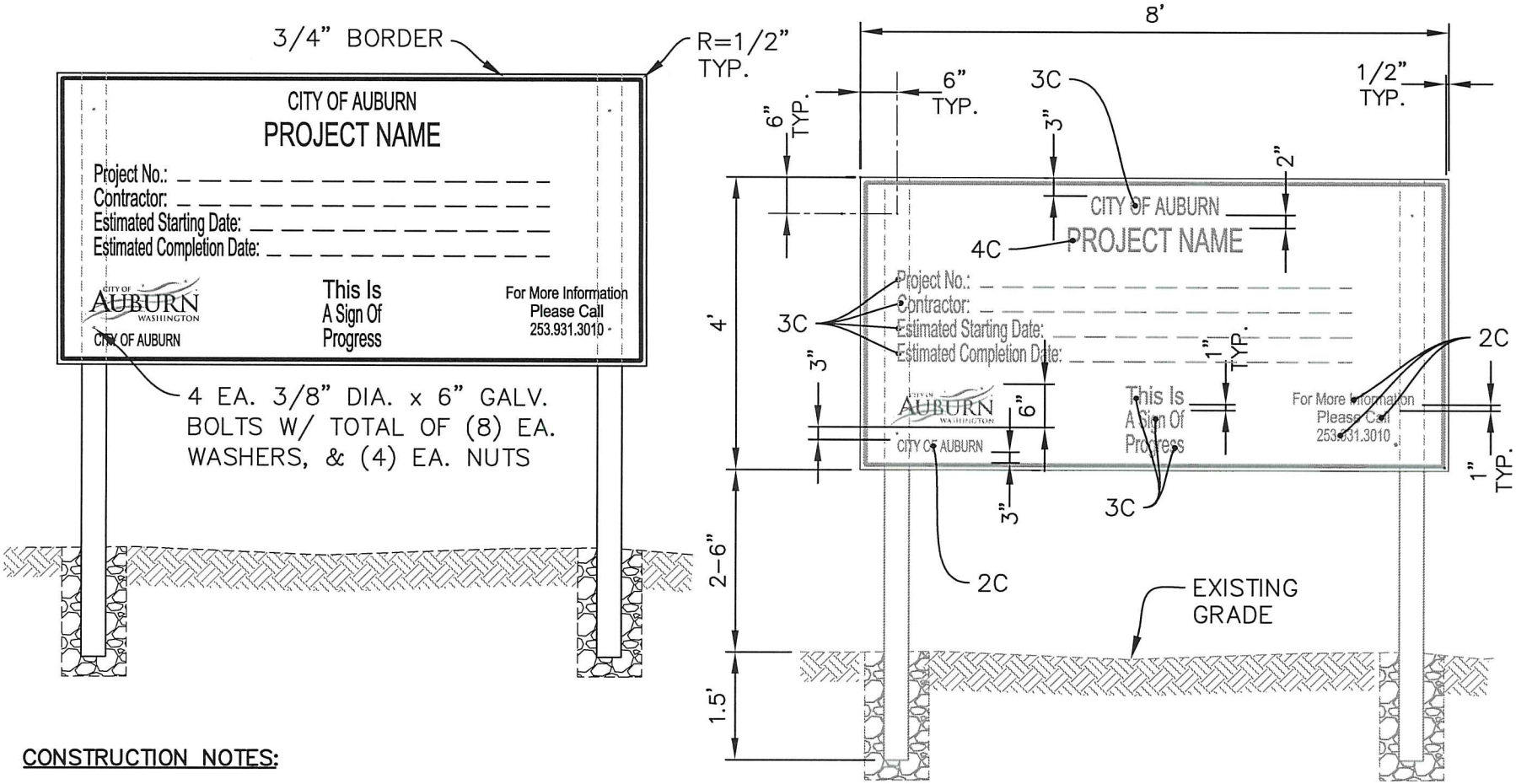

CONSTRUCTION NOTES:

1. SIGN BOARD SHALL BE CONSTRUCTED FROM 4'x4'x3/4" EXTERIOR MARINE PLYWOOD.
2. ALL LETTERS AND NUMERALS SHALL BE SERIES C.
3. LETTERING SHALL BE BLACK ON WHITE BACKGROUND USING 3M SCOTCHLITE EC FILM SERIES 1700 OVER 3M DIAMOND GRADE VIP OR BETTER.
4. SIGN AND POSTS SHALL BE PLANTED INTO AN UNYIELDING SOIL AND REINFORCED BY TAMPING GRAVEL OR SMALL ROCKS WHEN NECESSARY TO ASSURE RESISTANCE AGAINST STRONG WIND. BRACING MAY BE REQUIRED AT SOME LOCATIONS AS DIRECTED BY THE ENGINEER.
5. SIGN BOARD SHALL BE FABRICATED AND MOUNTED ON 2 EACH 4"x4"x8' POSTS WITH THE FOLLOWING GALVANIZED FASTENERS AND SIZES AS INDICATED:

   4 EA. 3/8" DIA.x6"
   4 EA. 3/8" NUTS
   8 EA. 3/8" WASHERS

APPROVED BY CITY ENGINEER: [signature]

DATE: 8/5/2016

CITY OF AUBURN WASHINGTON

TEMPORARY CONSTRUCTION SITE SIGN BOARD (8'x4')

COMMUNITY DEVELOPMENT & PUBLIC WORKS DEPT.

STANDARD DETAIL: G-05.1

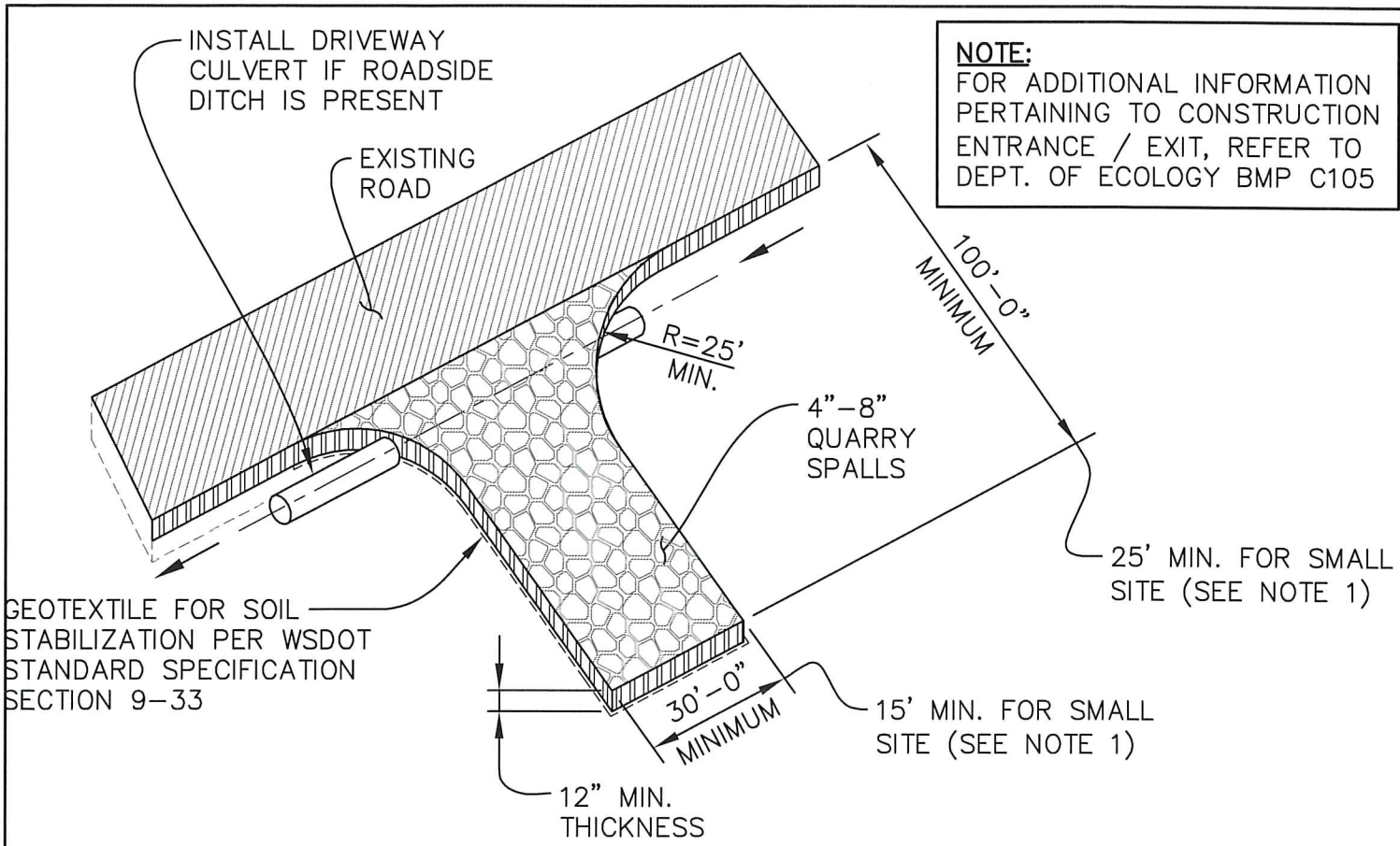

NOTE:
FOR ADDITIONAL INFORMATION PERTAINING TO CONSTRUCTION ENTRANCE / EXIT, REFER TO DEPT. OF ECOLOGY BMP C105

MAINTENANCE STANDARDS:

1. SMALL SITE IS DEFINED AS A SITE THAT ADDS OR REPLACES LESS THAN 5,000 SQUARE FEET OF IMPERVIOUS SURFACE & DISTURBS LESS THAN ONE ACRE.
2. QUARRY SPALLS PLUS WOVEN GEOTEXTILE FABRIC UNDER ROCK SHALL BE ADDED AS NEEDED TO KEEP THE ENTRANCE IN CONFORMANCE WITH THESE STANDARDS.
3. IF THE ENTRANCE IS NOT PREVENTING SEDIMENT FROM BEING TRACKED ONTO PAVEMENT, THEN ALTERNATIVE MEASURES TO KEEP THE STREETS FREE OF SEDIMENT SHALL BE USED. THIS MAY INCLUDE SHOVELING, PICKUP SWEEPING, & HAND SWEEPING, AN INCREASE IN THE ENTRANCE DIMENSIONS, OR THE INSTALLATION OF A SELF-CONTAINED WHEEL WASH STATION, (REFER TO DOE BMP C-106 FOR MORE INFORMATION).
4. ANY SEDIMENT THAT IS TRACKED ONTO STREET PAVEMENT SHALL BE REMOVED IMMEDIATELY BY SHOVELING, PICKUP SWEEPING, & HAND SWEEPING. THE SEDIMENT COLLECTED BY SWEEPING SHALL BE REMOVED OR STABILIZED ONSITE. PAVEMENT SHALL NOT BE CLEANED BY WASHING DOWN THE STREET, EXCEPT WHEN SWEEPING IS INEFFECTIVE & THERE IS A THREAT TO PUBLIC SAFETY. IF IT IS NECESSARY TO WASH THE STREETS, A CONSTRUCTION OF A SMALL SUMP SHALL BE CONSIDERED. SEDIMENT WOULD THEN BE WASHED INTO THE SUMP.
5. ANY ROCK SPALLS THAT ARE LOOSENED FROM THE DRIVEWAY PAD & ONTO THE ROADWAY SHALL BE REMOVED IMMEDIATELY. VACTOR TRUCK MUST BE USED TO CLEAN CATCH BASIN IF IT BECOMES PLUGGED.
6. VEHICLES SHALL NOT ENTER OR EXIT THE SITE OTHER THAN THE CONSTRUCTION ENTRANCE(S).
7. REMOVE TEMPORARY CONSTRUCTION ENTRANCE/EXIT UPON COMPLETION OF THE ON-SITE WORK.

APPROVED BY CITY ENGINEER:	DATE:	CITY OF AUBURN WASHINGTON	TEMPORARY CONSTRUCTION ENTRANCE / EXIT
	8/5/2016		
COMMUNITY DEVELOPMENT & PUBLIC WORKS DEPT.			STANDARD DETAIL: E-01.1

Plotted by: Craig Dobyns on 7/13/2016 File location: M:\Construction Standard Details\Approved Drawing Files (dwg)\Erosion Control\STDETL-E-01.1

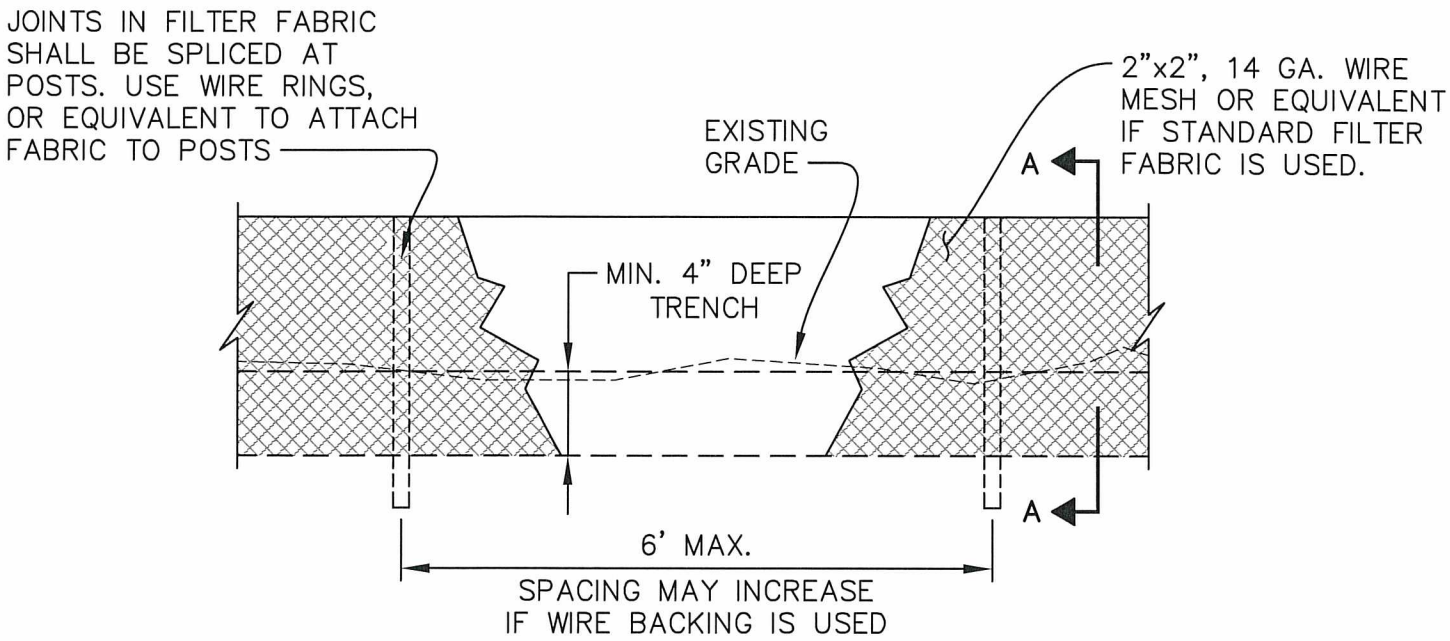

SILT FENCE
NOT TO SCALE

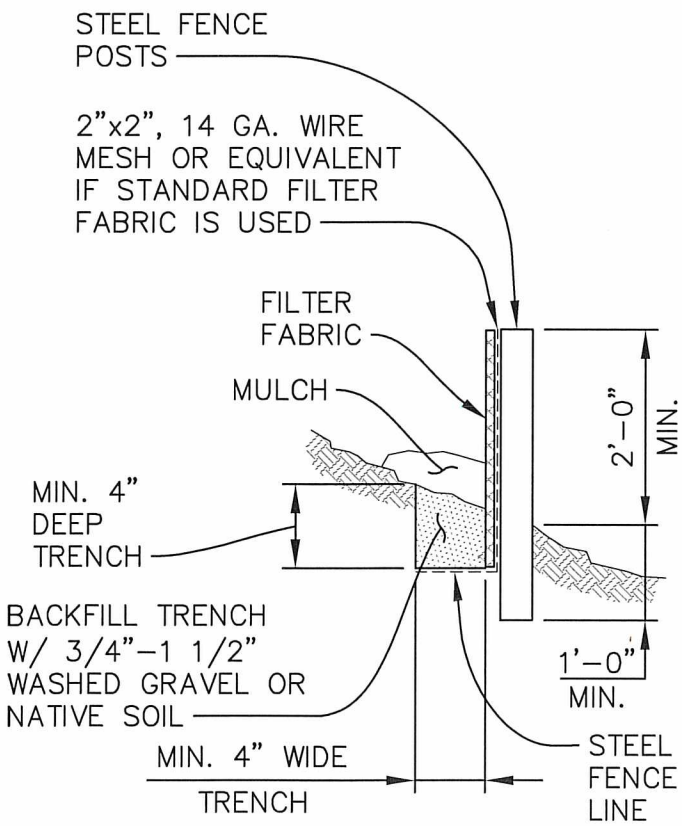

SECTION A-A
NOT TO SCALE

MAINTENANCE STANDARDS:

1. INSPECT WEEKLY ON ACTIVE SITES, MONTHLY ON INACTIVE SITES, & AFTER EACH STORM EVENT TO VERIFY PROTECTION IS STILL ADEQUATE. ANY DAMAGE SHALL BE REPAIRED IMMEDIATELY.
2. IF CONCENTRATED FLOWS ARE EVIDENT UPHILL OF THE FENCE, THEY MUST BE INTERCEPTED AND CONVEYED TO A SEDIMENT POND.
3. THE UPHILL SIDE OF THE FENCE SHALL BE PERIODICALLY CHECKED FOR SIGNS OF CLOGGING CAUSING CHANNELIZATION OF THE FLOWS PARALLEL TO THE FENCE. IN SUCH CASE, REPLACE THE FENCE AND OR REMOVE THE TRAPPED DEBRIS AND SEDIMENT.
4. SEDIMENT AND DEBRIS BUILD UP MUST BE REMOVED WHEN 6" HIGH.
5. REMOVE AND REPLACE DETERIORATED FILTER FABRIC DUE TO ULTRAVIOLET BREAKDOWN.
6. UPON COMPLETION OF WORK AND WHEN ALLOWED BY THE CITY OF AUBURN, THE CONTRACTOR SHALL REMOVE ALL FILTER FABRIC FENCE AND GRAVEL. PROVIDE FINISH GRADES WITH SURFACING MATERIAL AND LANDSCAPING AS REQUIRED.

NOTES:

1. FILTER FABRIC FENCES SHALL BE INSTALLED ALONG CONTOUR WHENEVER POSSIBLE.
2. FOR ADDITIONAL TECHNICAL INFORMATION, REFER TO WSDOE BMP C233.

APPROVED BY CITY ENGINEER:	DATE: 8/5/2016	CITY OF AUBURN WASHINGTON	SILT CONTROL FENCE
COMMUNITY DEVELOPMENT & PUBLIC WORKS DEPT.			STANDARD DETAIL: E-02.1

Plotted by: Craig Dobyns on 7/13/2016 File location: M:\Construction Standard Details\Approved Drawing Files (dwg)\Erosion Control\STDETL-E-02.1

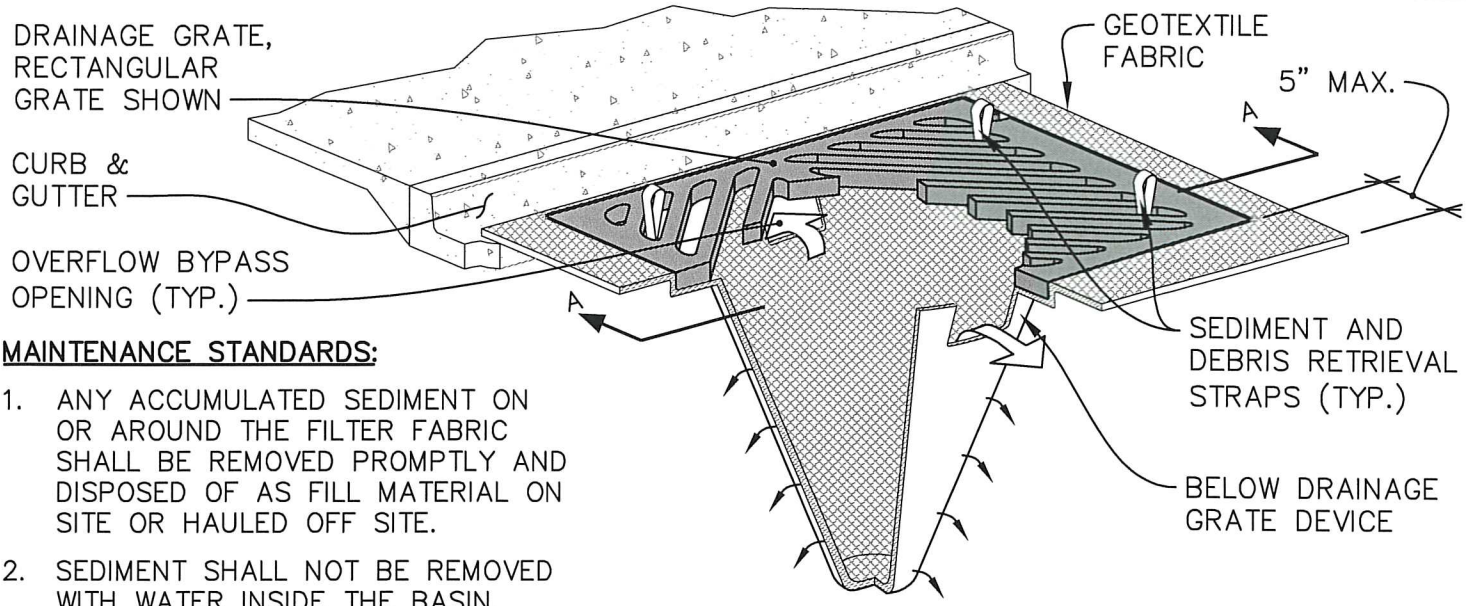

BAG FILTER
SCHEMATIC DETAIL VIEW
NOT TO SCALE

MAINTENANCE STANDARDS:

1. ANY ACCUMULATED SEDIMENT ON OR AROUND THE FILTER FABRIC SHALL BE REMOVED PROMPTLY AND DISPOSED OF AS FILL MATERIAL ON SITE OR HAULED OFF SITE.
2. SEDIMENT SHALL NOT BE REMOVED WITH WATER INSIDE THE BASIN.
3. REGULAR MAINTENANCE IS REQUIRED. INSPECT WEEKLY ON ACTIVE SITES, MONTHLY ON INACTIVE SITES, & AFTER EACH STORM EVENT TO VERIFY PROTECTION IS STILL ADEQUATE. REPLACE AS NEEDED.
4. ANY SEDIMENT IN THE CATCH BASIN INSERT SHALL BE REMOVED WHEN IT HAS FILLED 1/3 OF THE STORAGE CAPACITY OF THE FILTER DEVICE.
5. THE GEOTEXTILE FABRIC FILTER MEDIA SHALL BE INSPECTED AFTER EACH STORM EVENT & CLEANED OR REPLACED WHEN 1/3 OF STORAGE CAPACITY IS REACHED, OR MONTHLY, UNDER NORMAL WEATHER CONDITIONS, WHICHEVER OCCURS FIRST.
6. REMOVE CATCH BASIN INLET PROTECTION DEVICE UPON COMPLETION OF THE WORK.

NOTES:

1. THIS DEVICE IS APPLICABLE TO WHERE PONDING OF WATER ABOVE THE CATCH BASIN WILL NOT CAUSE TRAFFIC PROBLEMS AND WHERE OVERFLOW WILL NOT RESULT
2. THIS INSERT DEVICE SHALL HAVE A MINIMUM OF 0.5 C.F. OF STORAGE. IT SHALL ALSO PROVIDE FOR DE-WATERING STORED SEDIMENT, AN OVERFLOW, AND EASE OF MAINTENANCE.
3. FOR ADDITIONAL TECHNICAL INFORMATION, REFER TO WSDOE BMP C220.

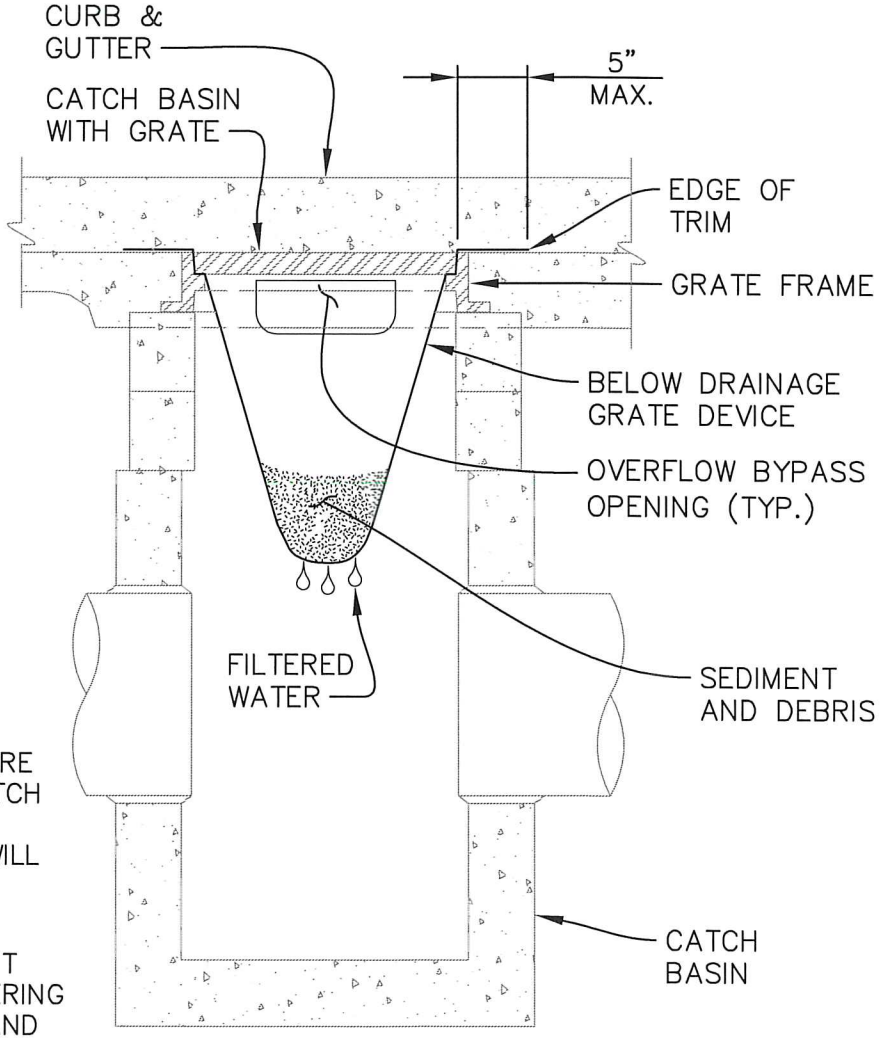

CATCH BASIN PROTECTION
SECTION VIEW
NOT TO SCALE

APPROVED BY CITY ENGINEER:	DATE: 8/5/2016	CITY OF AUBURN WASHINGTON	CATCH BASIN INLET PROTECTION
COMMUNITY DEVELOPMENT & PUBLIC WORKS DEPT.			STANDARD DETAIL: E-03.1

Plotted by: Craig Dobyns on 7/13/2016 File location: M:\Construction Standard Details\Approved Drawing Files (dwg)\Erosion Control\STDETL-E-03.1

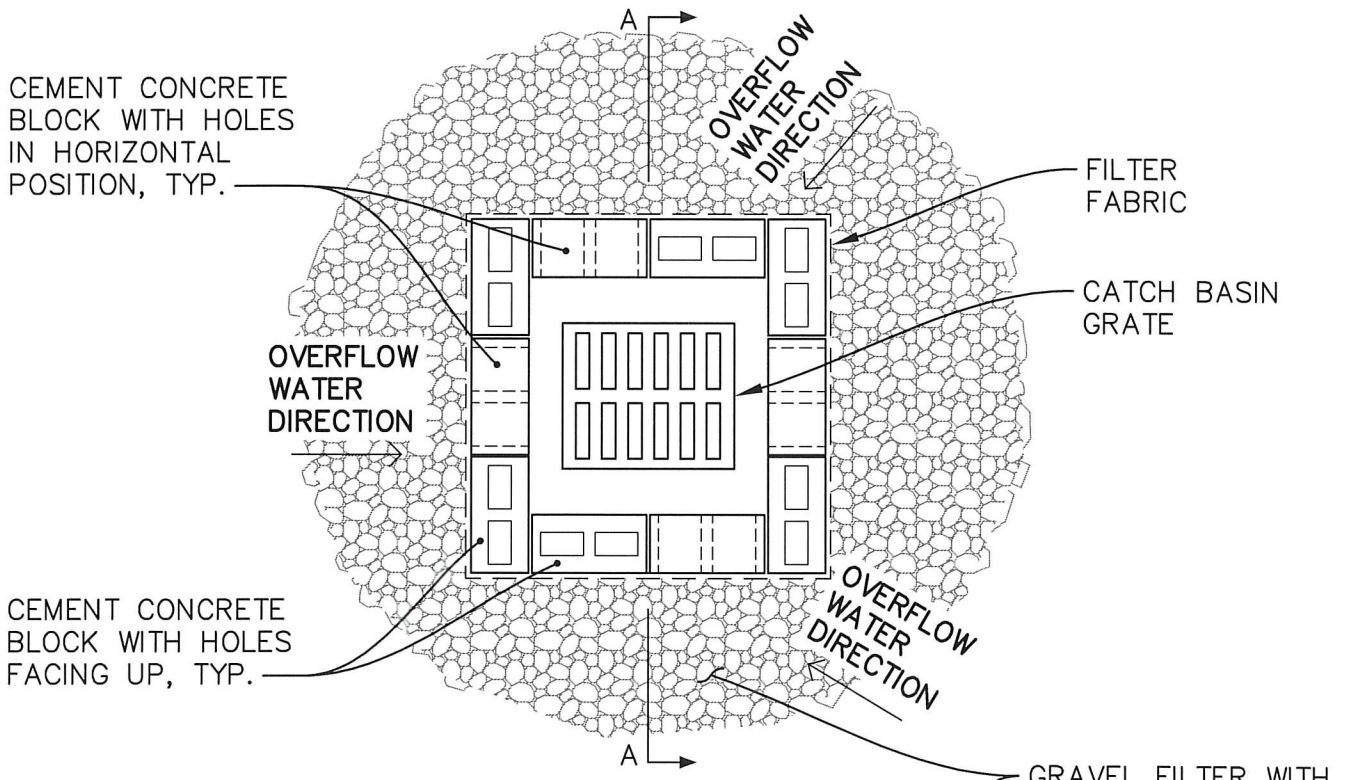

AREA DRAIN
PLAN VIEW
NTS

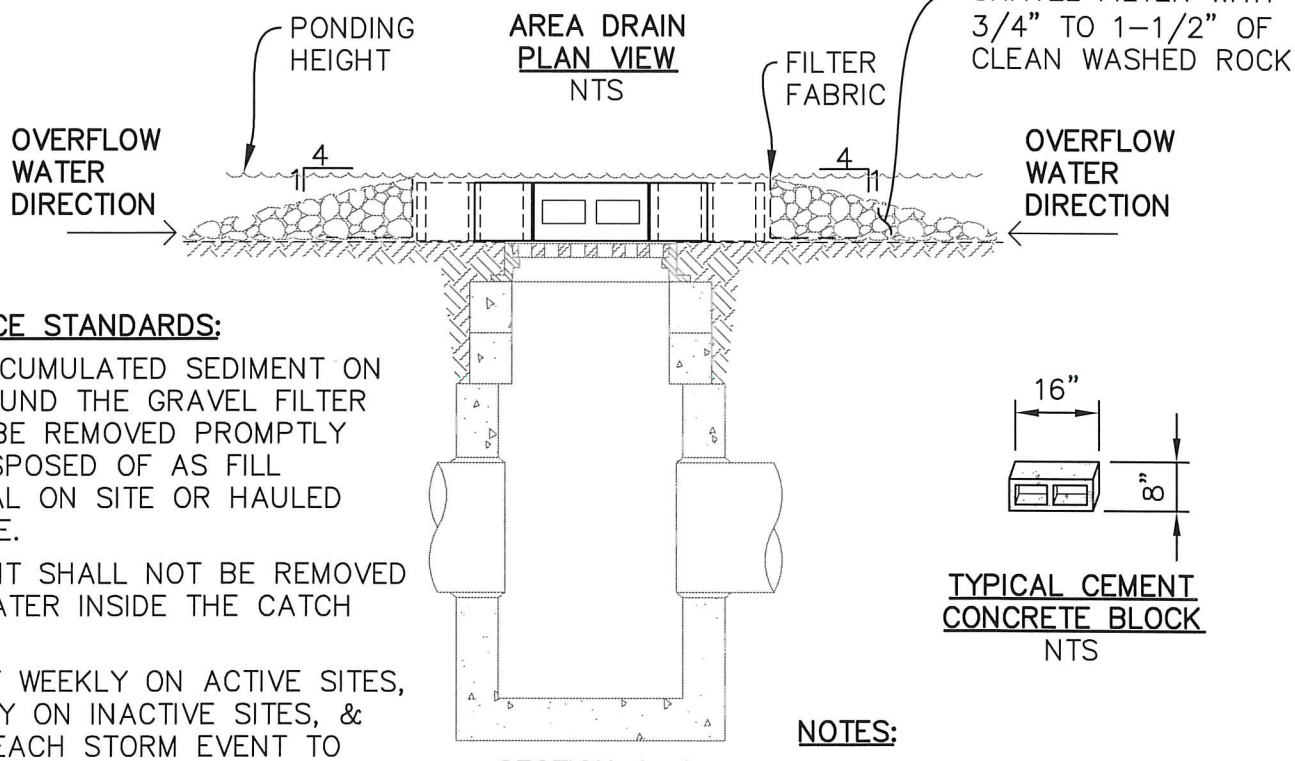

SECTION A–A
NTS

TYPICAL CEMENT CONCRETE BLOCK
NTS

MAINTENANCE STANDARDS:

1. ANY ACCUMULATED SEDIMENT ON OR AROUND THE GRAVEL FILTER SHALL BE REMOVED PROMPTLY AND DISPOSED OF AS FILL MATERIAL ON SITE OR HAULED OFF SITE.
2. SEDIMENT SHALL NOT BE REMOVED WITH WATER INSIDE THE CATCH BASIN.
3. INSPECT WEEKLY ON ACTIVE SITES, MONTHLY ON INACTIVE SITES, & AFTER EACH STORM EVENT TO VERIFY PROTECTION IS STILL ADEQUATE. REPLACE AS NEEDED.
4. REMOVE CATCH BASIN PROTECTION UPON COMPLETION OF PROJECT.
5. THIS DETAIL IS APPLICABLE ONLY WHERE PAVEMENT DOES NOT EXIST AROUND THE CATCH BASINS.

NOTES:

1. BASIN INLET IN SOME AREAS MAY REQUIRE (2) STACKS OF CEMENT CONCRETE BLOCKS, AS DIRECTED BY THE ENGINEER.
2. FOR ADDITIONAL TECHNICAL INFORMATION, REFER TO WSDOE BMP C220.

APPROVED BY CITY ENGINEER:	DATE:	CITY OF AUBURN WASHINGTON	ALTERNATE CATCH BASIN INLET PROTECTION
	8/5/2016		
COMMUNITY DEVELOPMENT & PUBLIC WORKS DEPT.			STANDARD DETAIL: E–04.1

Plotted by: Craig Dobyne on 7/13/2016 File location: M:\Construction Standard Details\Approved Drawing Files (dwg)\Erosion Control\STDETL-E-04.1

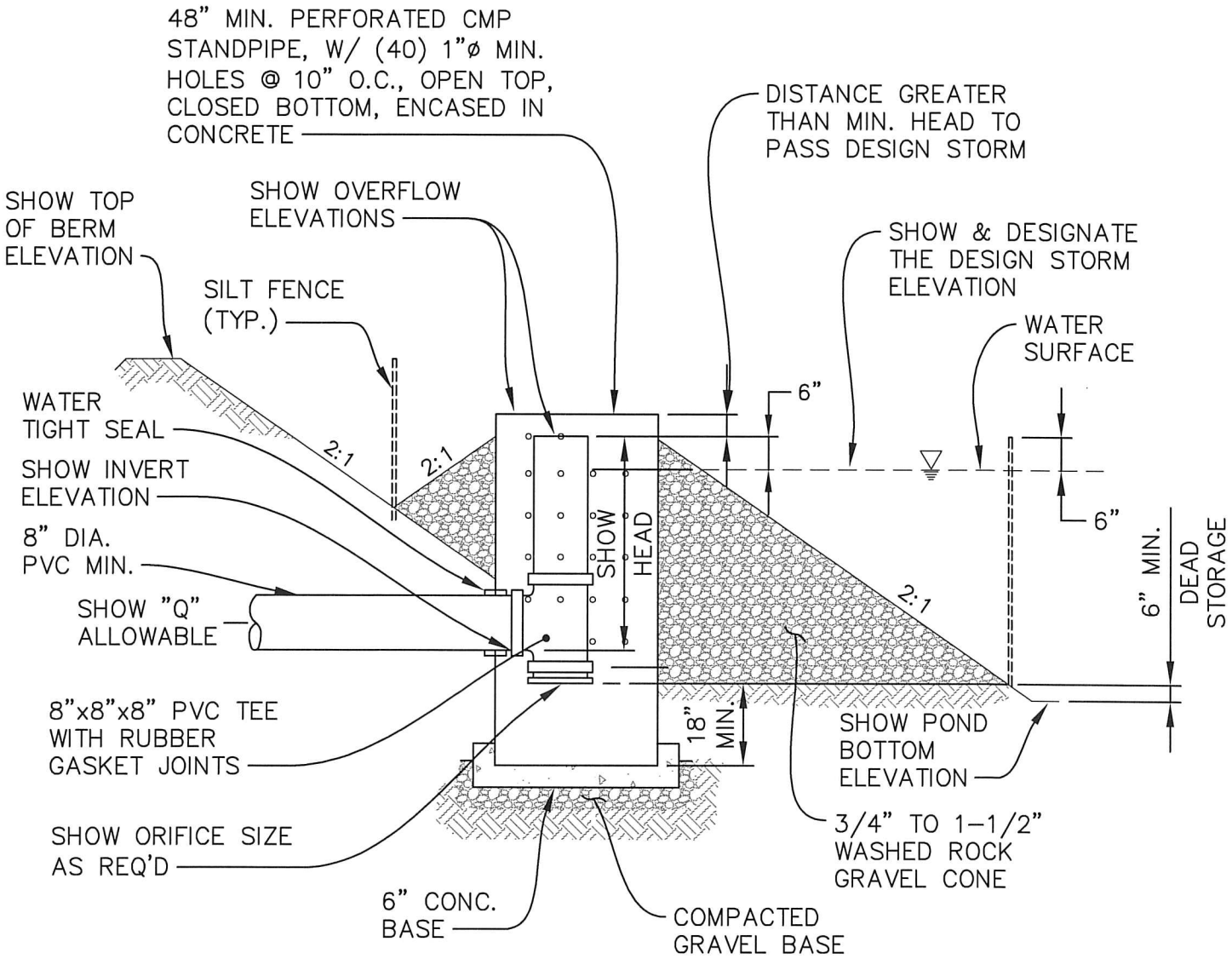

NOTES:

1. PROVIDE A RIP RAP LINED SPILLWAY, 6" MINIMUM ABOVE STANDPIPE, OPEN TOP.
2. A MULTIPLE PHASE POND SEPARATED BY PERVIOUS GRAVEL WINDOW MAY BE REQUIRED TO CONTROL AND TRAP SEDIMENT, AND TO REDUCE DISCHARGE ENERGY.
3. POND CHARACTERISTICS SUCH AS DESIGN VOLUME, INFLOW, OUTFLOW, AND MAXIMUM HEAD SHALL BE SHOWN ON PLANS.
4. THE OUTLET PIPE SHALL BE A MINIMUM OF 8" DIAMETER.
5. INDICATE SEASONAL HIGH GROUND WATER ELEVATION.
6. THIS DETAIL IS FOR DESIGN GUIDANCE ONLY, THE ENGINEER IS RESPONSIBLE FOR PROVIDING THE NECESSARY ELEVATIONS AND ORIFICE SIZES.
7. REFER TO WSDOE BMP 220 FOR ADDITIONAL INFORMATION.

APPROVED BY CITY ENGINEER:	DATE: 8/5/2016	CITY OF AUBURN WASHINGTON	GRADING/EROSION DISCHARGE CONTROL STRUCTURE
COMMUNITY DEVELOPMENT & PUBLIC WORKS DEPT.			STANDARD DETAIL: E-05.1

Plotted by: Craig Dobyns on 7/13/2016 File location: M:\Construction Standard Details\Approved Drawing Files (dwg)\Erosion Control\STDETL-E-05.1

CRUSHED SURFACING BASE COURSE (CSBC) PER SECTION 9-03.9(3) BETWEEN TRENCH BACKFILL AND PAVEMENT. MATCH EXISTING THICKNESS (4" MIN.)

SAW CUT FULL DEPTH 12" MIN. FROM EDGE OF TRENCH EXCAVATION, TYP.

FOR RESTORATION OF EXISTING ROADWAY SEE STD DETAIL T-02

ASPHALT TACK APPLIED TO ALL EXISTING PAVEMENT SURFACES PER SECTION 5-04.3(5)A. TACK COAT SHALL BE CSS-1 OR CSS-1H EMULSIFIED ASPHALT OR APPROVED EQUAL

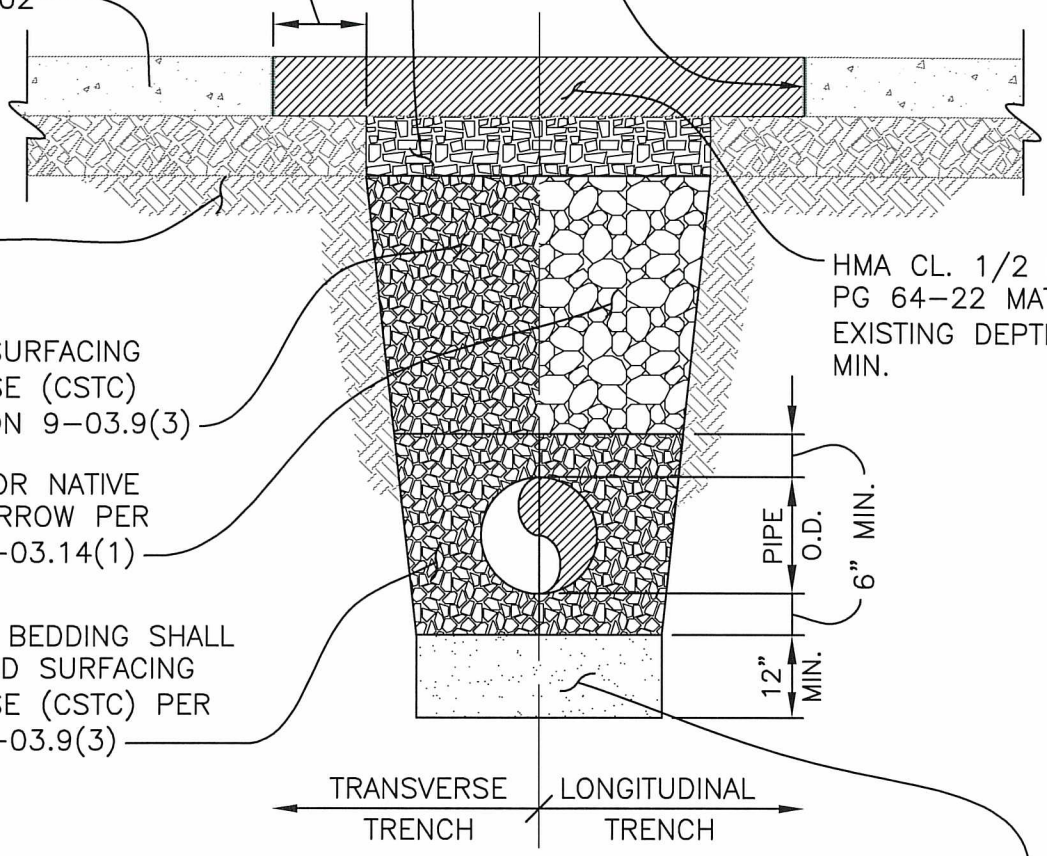

EXISTING SUBGRADE

HMA CL. 1/2 IN. PG 64-22 MATCH EXISTING DEPTH 4" MIN.

CRUSHED SURFACING TOP COURSE (CSTC) PER SECTION 9-03.9(3)

IMPORTED OR NATIVE GRAVEL BORROW PER SECTION 9-03.14(1)

PIPE ZONE BEDDING SHALL BE CRUSHED SURFACING TOP COURSE (CSTC) PER SECTION 9-03.9(3)

IF THE TRENCH BOTTOM IS DETERMINED TO BE UNSUITABLE BY THE ENGINEER, THE UNSUITABLE FOUNDATION MATERIAL SHALL BE REMOVED & REPLACED IN ACCORDANCE WITH THE FOLLOWING SECTIONS OF THE STANDARD SPECIFICATIONS: WATER 7-09.3(8), STORM SEWER & SANITARY SEWER 7-08.3(1)A.
MAX. WIDTH SHALL BE IN ACCORDANCE WITH WATER SECTION 7-09.3(7), STORM & SANITARY SEWER 7-08.3(1)A & 2-09.4

NOTES:

1. TRANSVERSE TRENCHES ARE TRENCHES THAT RUN PERPENDICULAR OR DIAGONAL ACROSS THE TRAVELED WAY OF THE ROAD. LONGITUDINAL TRENCHES ARE TRENCHES THAT RUN PARALLEL WITH THE TRAVELED WAY OF THE ROAD.
2. ALL BACKFILL SHALL BE COMPACTED TO 95% MAXIMUM DENSITY.

APPROVED BY CITY ENGINEER:	DATE:	CITY OF AUBURN WASHINGTON	TYPICAL PIPE TRENCH BACKFILL
	8/5/2016		
COMMUNITY DEVELOPMENT & PUBLIC WORKS DEPT.			STANDARD DETAIL: T-01.1

Plotted by: Craig Dobyns on 8/1/2016 File location: M:\Construction Standard Details\Approved Drawing Files (dwg)\Traffic\STDETL-T-01.1

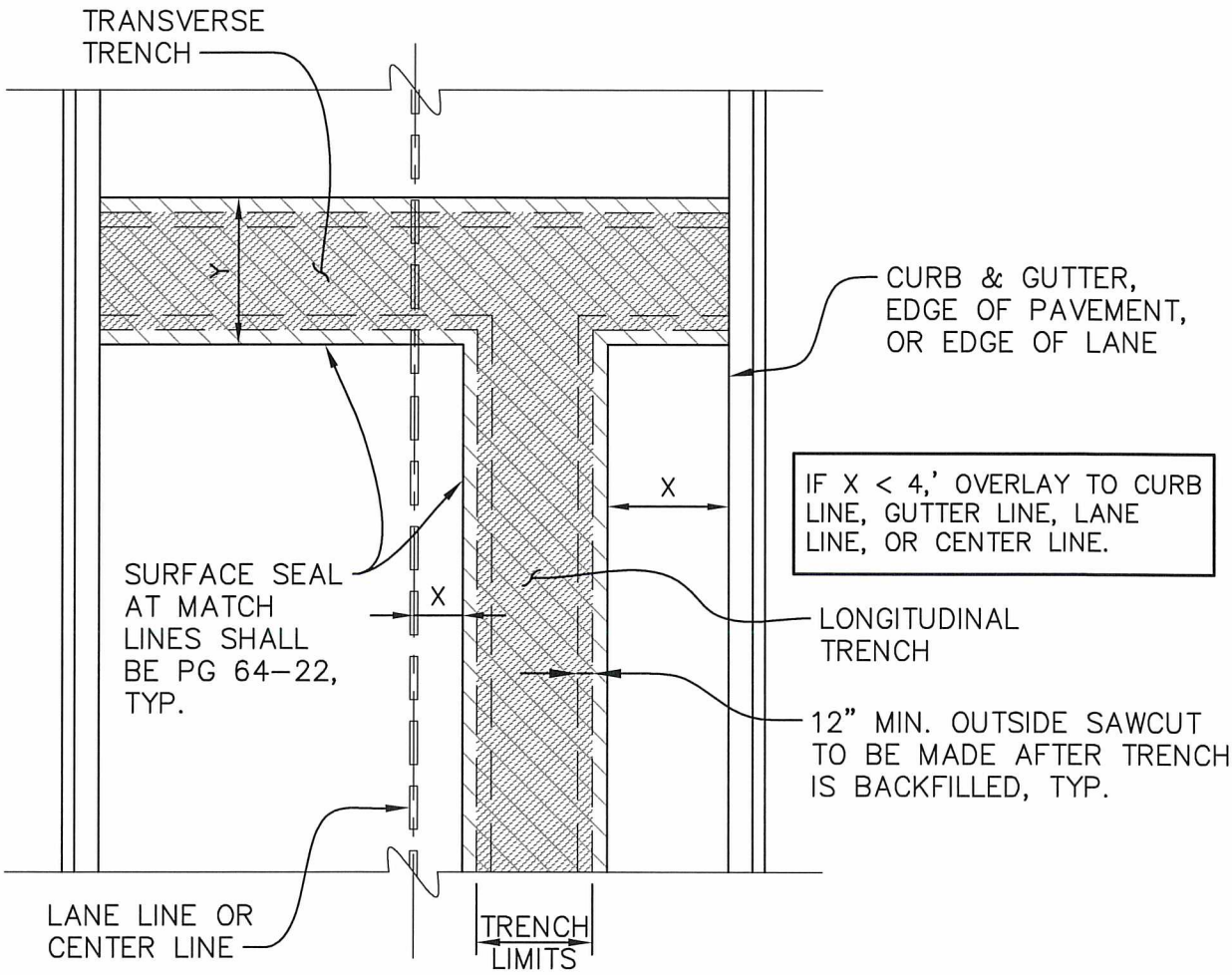

TYPE OF STREET	Y
PRINCIPAL ARTERIAL	50'
MINOR ARTERIAL	40'
COLLECTOR	30'
LOCAL	20'

LEGEND:

GRIND AND OVERLAY (2" MIN. DEPTH)

TRENCH LIMITS (SEE STD. DETAIL T-01)

FULL DEPTH SAWCUT

NOTES:

1. ADDITIONAL RESTORATION OVERLAY MAY BE REQUIRED AS DIRECTED BY ENGINEER.
2. OFFSET PAVEMENT JOINTS 6" FROM LANE LINES.
3. TRENCHES IN/ACROSS INTERSECTIONS SHALL BE CONSIDERED "TRANSVERSE".
4. ASPHALT PAVEMENT SHALL BE HMA CL 1/2" PG 64-22.

APPROVED BY CITY ENGINEER: DATE: 8/5/2016

CITY OF AUBURN WASHINGTON

EXISTING ROADWAY RESTORATION OF UTILITY TRENCHES

COMMUNITY DEVELOPMENT & PUBLIC WORKS DEPT. STANDARD DETAIL: T-02.1

Plotted by: Craig Dobyns on 8/1/2016 File location: M:\Construction Standard Details\Approved Drawing Files (dwg)\Traffic\STDETL-T-02.1

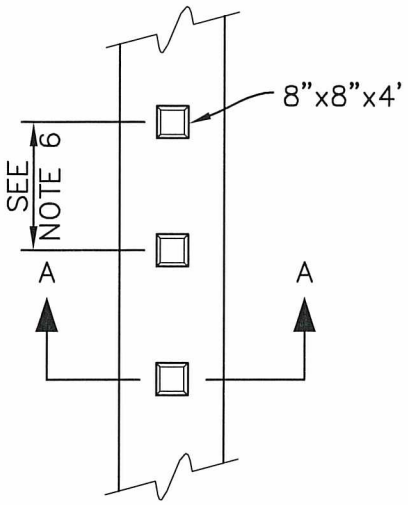

REMOVABLE BOLLARD
NOT TO SCALE

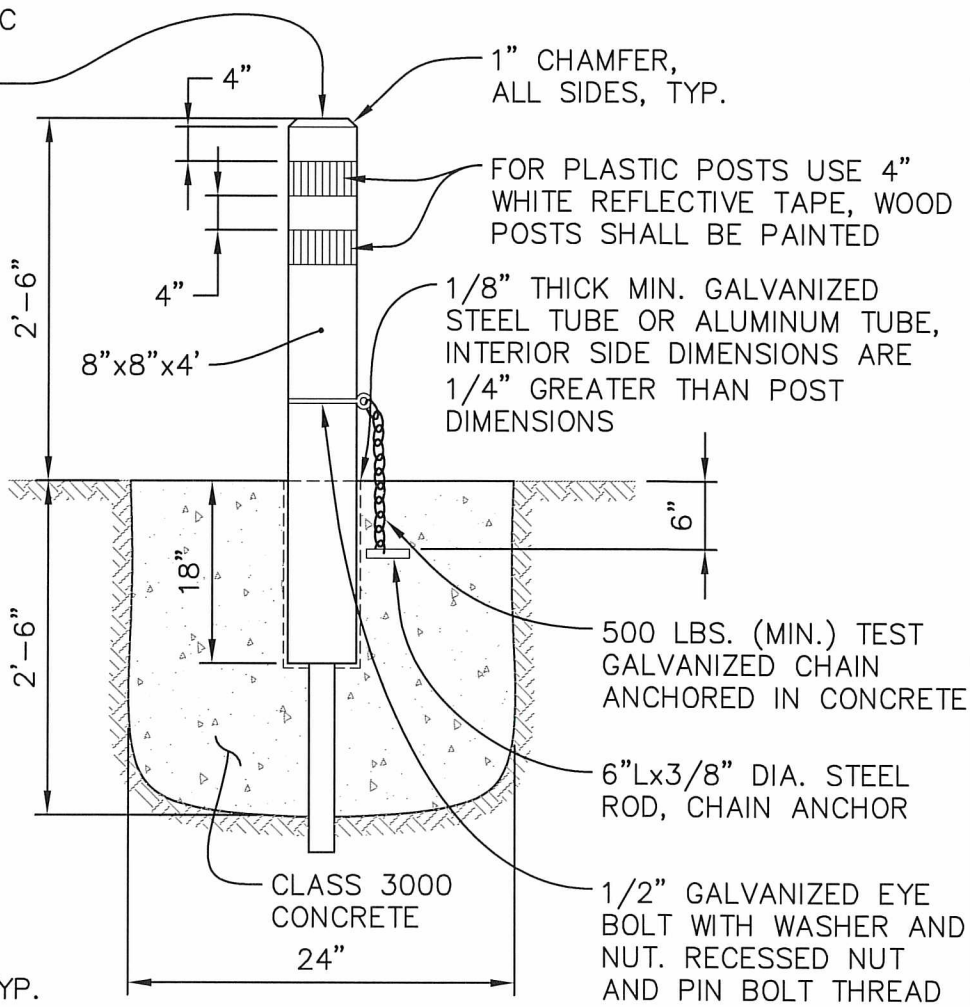

SECTION A–A
NOT TO SCALE

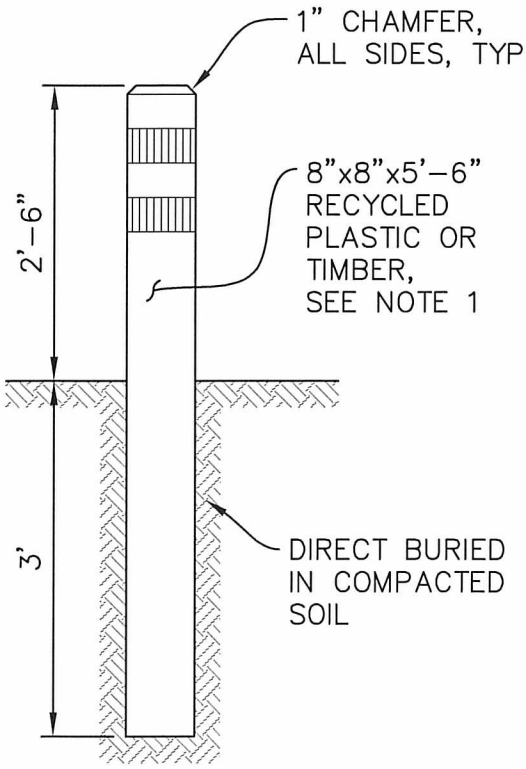

FIXED BOLLARD
NOT TO SCALE

NOTES:

1. RECYCLED PLASTIC BOLLARDS SHALL BE WHITE. TIMBER SHALL BE DOUGLAS FIR OF DENSE CONSTRUCTION GRADE, AND SHALL BE PRESSURE TREATED WITH WEATHER BORNE PRESERVATIVE (ACA, CCA, ACZA) IN ACCORDANCE WITH REQUIREMENTS OF SEC. 9–09.3(1) (GENERAL REQUIREMENTS) OF WSDOT STANDARD SPECIFICATIONS AND CITY'S AMENDMENTS THERETO. TOP 5" OF TIMBER SHALL BE PAINTED WHITE.
2. GALVANIZED STEEL TUBE SHALL CONFORM TO ASTM A53 GRADE A.
3. NUTS, BOLTS, & WASHERS SHALL CONFORM TO ASTM A307.
4. ALL STEEL PARTS SHALL BE GALVANIZED.
5. CEMENT CONCRETE SHALL BE CLASS 3000.
6. MINIMUM OF 5'–0" O.C. SPACING.
7. BOLLARD SHALL BE PLUMBED VERTICALLY IN ALL DIRECTIONS.

APPROVED BY CITY ENGINEER:	DATE:	CITY OF AUBURN WASHINGTON	TYPICAL BOLLARD INSTALLATION
	8/5/2016		
COMMUNITY DEVELOPMENT & PUBLIC WORKS DEPT.			STANDARD DETAIL: T–03.1

Plotted by: Craig Dobyns on 7/13/2016 File location: M:\Construction Standard Details\Approved Drawing Files (dwg)\Traffic\STDETL-T-03.1

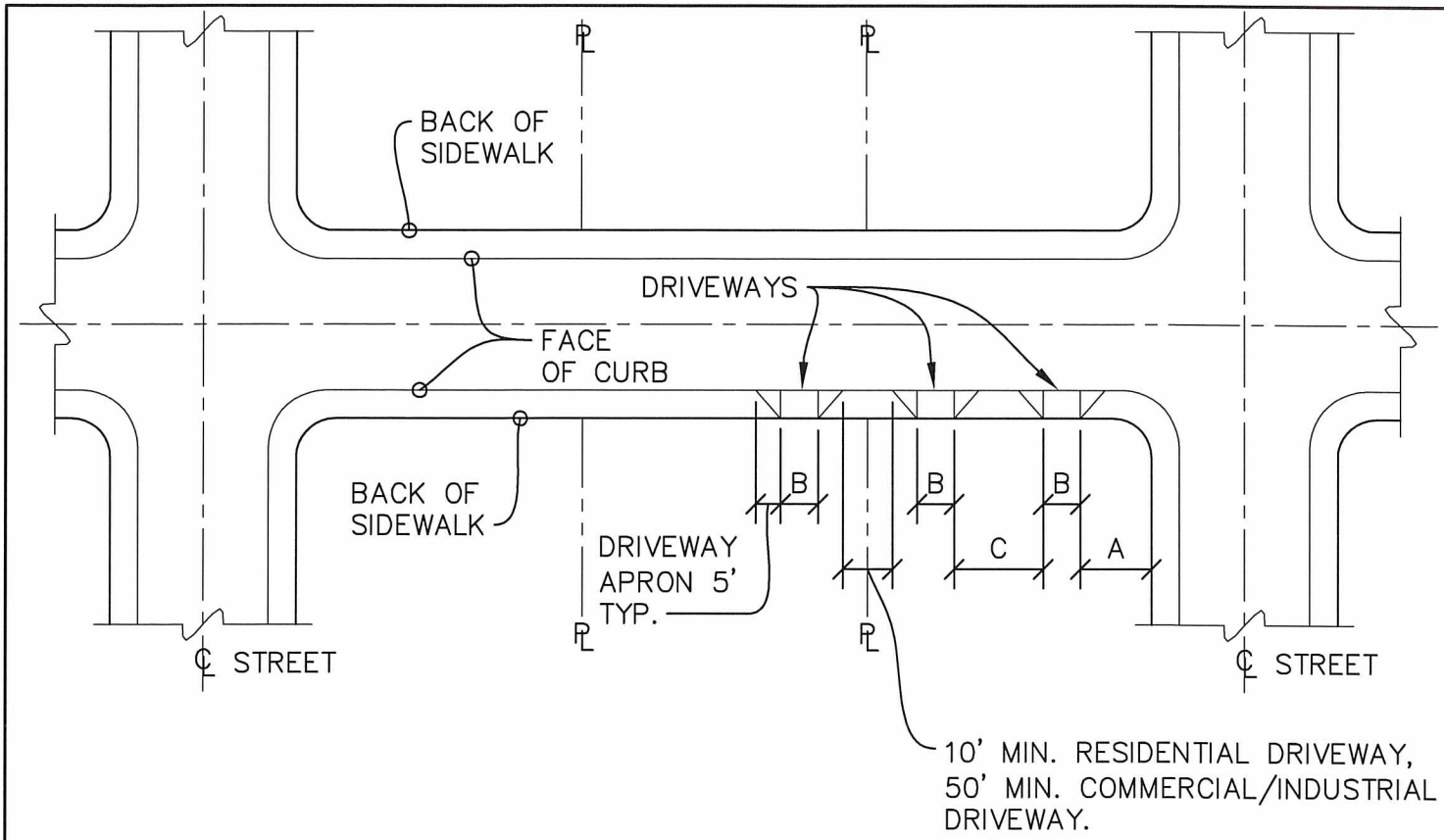

DRIVEWAY WIDTHS		
	MINIMUM B	MAXIMUM B
RESIDENTIAL	11'	24'
LIGHT COMMERCIAL / INDUSTRIAL	24'	36'
MEDIUM COMMERCIAL / INDUSTRIAL	24'	42'
HEAVY COMMERCIAL / INDUSTRIAL	24'	32'

RESIDENTIAL DRIVEWAYS SERVING 4 OR MORE LIVING UNITS SHALL BE DESIGNATED COMMERCIAL / INDUSTRIAL DRIVEWAYS.

NOTES:

1. DRIVEWAY WIDTHS AND LOCATIONS ARE AS DETERMINED BY THE REQUIREMENTS OF DESIGN STANDARDS 10.04.
2. DISTANCE 'A' SHALL BE DETERMINED BY DESIGN STANDARD 10.04.4.1 TO DESIGN STANDARD 10.04.4.1.4.
3. DISTANCE 'B' SHALL BE DETERMINED BY DESIGN STANDARD 10.04.4.4.
4. DISTANCE 'C' SHALL BE DETERMINED BY DESIGN STANDARD 10.04.4.2.
5. REFER TO WSDOT STANDARD PLAN F-80.10 FOR CEMENT CONCRETE DRIVEWAY CONSTRUCTION.

APPROVED BY CITY ENGINEER:	DATE:	CITY OF AUBURN WASHINGTON	DRIVEWAY WIDTHS AND LOCATION
	8/5/2016		
COMMUNITY DEVELOPMENT & PUBLIC WORKS DEPT.			STANDARD DETAIL: T-04.1

Plotted by: Craig Dobyns on 7/25/2016 File location: M:\Construction Standard Details\Approved Drawing Files (dwg)\Traffic\STDETL-T-04.1

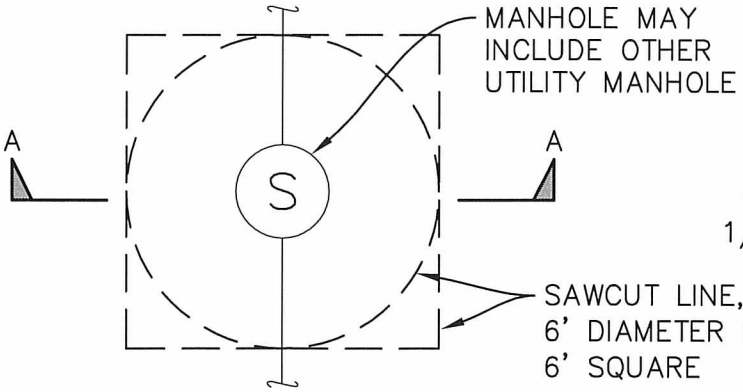

TYPICAL PLAN VIEW OF MANHOLE (OR CB) IN ASPAHLT AREA
NOT TO SCALE

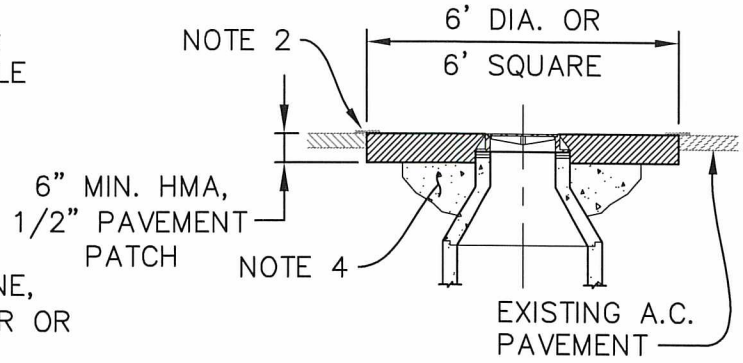

SECTION A–A
NOT TO SCALE

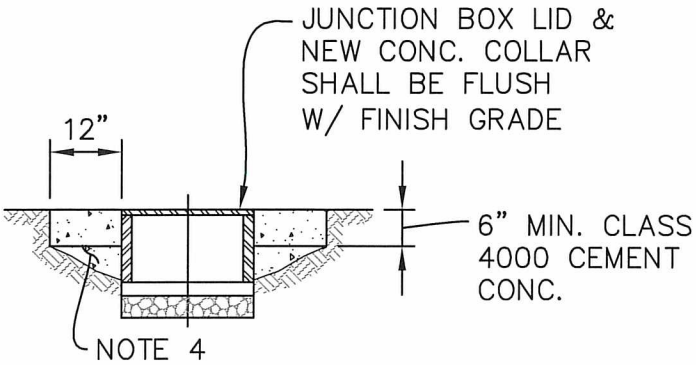

JUNCTION BOX IN UNIMPROVED OR PARTIAL ASPHALT AREAS
NOT TO SCALE

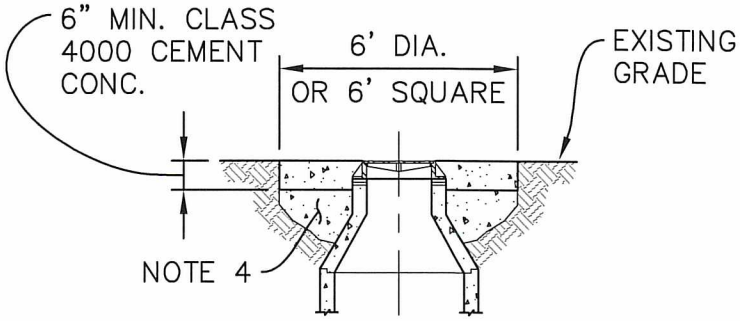

MANHOLE OR CATCH BASIN IN UNIMPROVED AREA
NOT TO SCALE

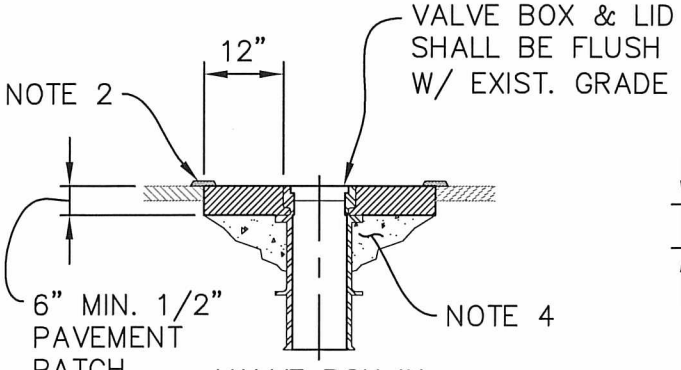

VALVE BOX IN ASPHALT AREA
NOT TO SCALE

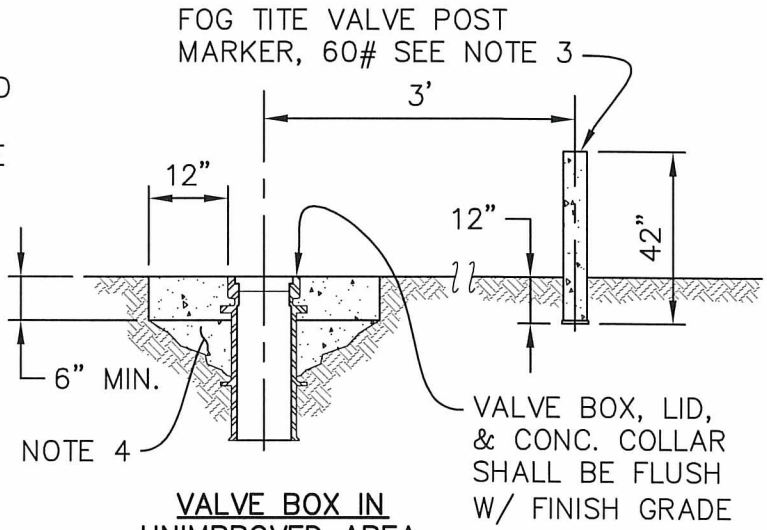

VALVE BOX IN UNIMPROVED AREA
NOT TO SCALE

NOTES:

1. ADJUSTMENT OF UTILITY STRUCTURES SHALL BE PER SPECIFICATIONS SECTION 7–05.3(1).
2. SURFACE SEAL AT MATCHLINE SHALL BE AR–4000.
3. VALVE IN UNIMPROVED AREAS SHALL HAVE A VALVE POST MARKER.
4. FILL ANY VOIDS OR DISTURBED AREAS BELOW 6" WITH QUICK SETTING CEMENT CONCRETE, DEPTH AS REQUIRED.

APPROVED BY CITY ENGINEER:	DATE: 8/5/2016	CITY OF AUBURN WASHINGTON	ADJUSTMENT OF NEW AND EXISTING UTILITY STRUCTURES TO FINISH GRADE
COMMUNITY DEVELOPMENT & PUBLIC WORKS DEPT.			STANDARD DETAIL: T–05.1

Plotted by: Craig Dobyns on 7/13/2016 File location: M:\Construction Standard Details\Approved Drawing Files (dwg)\Traffic\STDETL-T-05.1

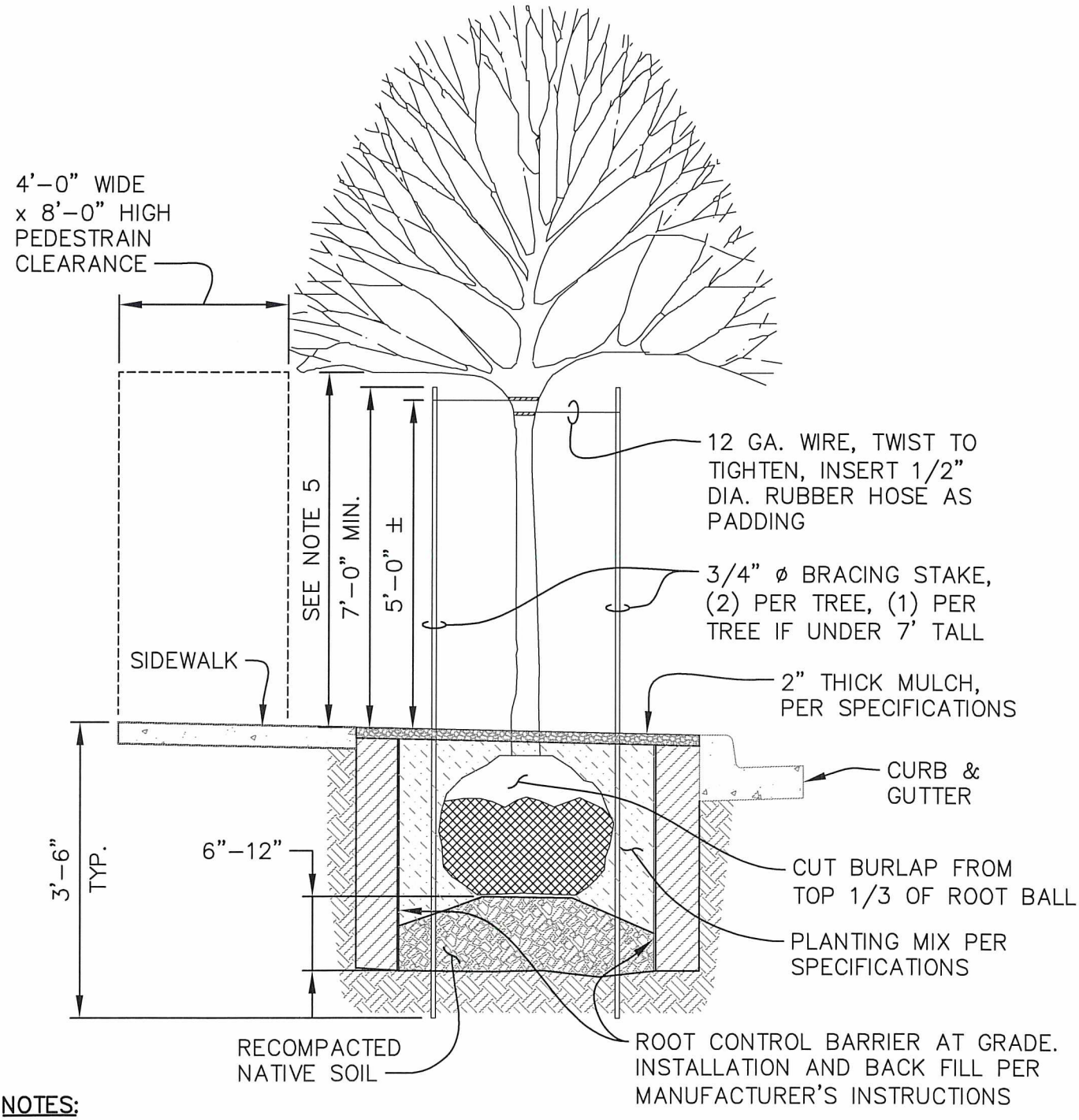

NOTES:

1. PLANT TREES 1" HIGHER THAN GROWN IN NURSERY.
2. TREE PIT SHALL NOT BE LESS THAN 2 TIMES THE ROOT BALL DIAMETER.
3. STREET TREES SHALL NOT BE PLACED WITHIN SIGHT DISTANCE TRIANGLE PER DESIGN STANDARDS SECTION 10.03.1.2.2.
4. AT TIME OF PLANTING, MAINTAIN LOWER BRANCHES OF TREE AT 5' MIN. CLEARANCE ABOVE THE SIDEWALK.
5. STREET TREES SHALL BE SELECTED FROM THE CITY APPROVED LIST OF STREET TREES PER TABLE 10-5A, SECTION 10.08.7 OF THE DESIGN STANDARD.

APPROVED BY CITY ENGINEER:	DATE:	CITY OF AUBURN WASHINGTON	STREET TREE IN LANDSCAPE STRIP
COMMUNITY DEVELOPMENT & PUBLIC WORKS DEPT.			STANDARD DETAIL: T-06.1

Plotted by: Craig Dobyns on 7/13/2016 File location: M:\Construction Standard Details\Approved Drawing Files (dwg)\Traffic\STDETL-T-06.1

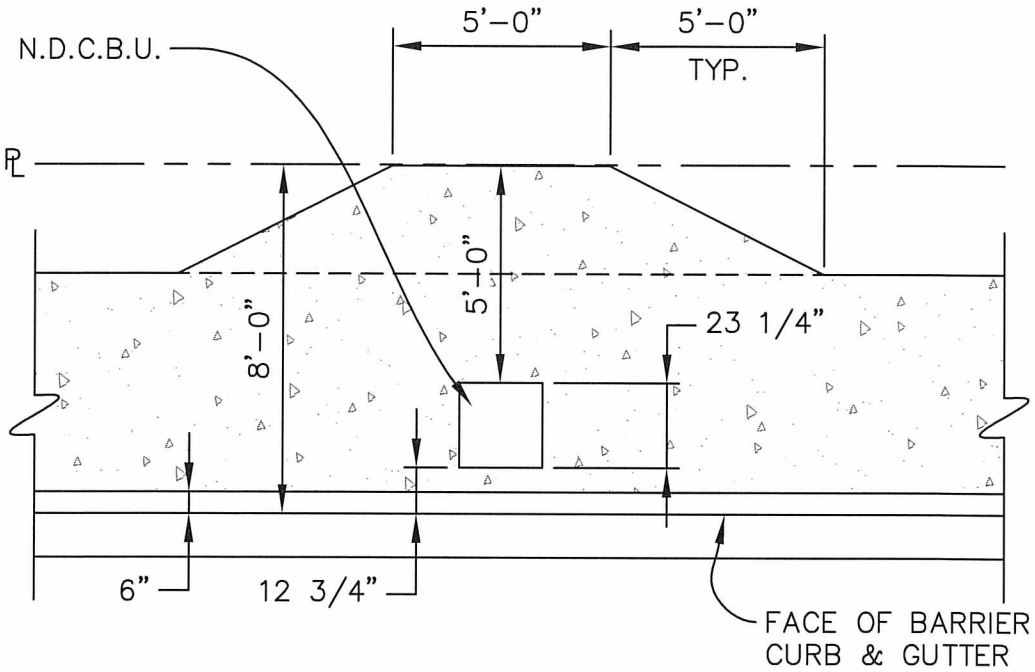

PLAN VIEW

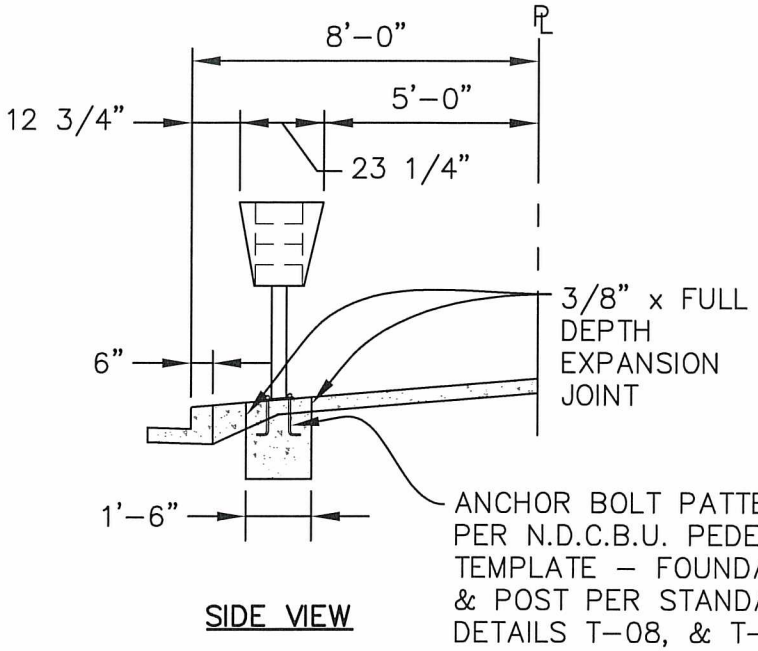

SIDE VIEW

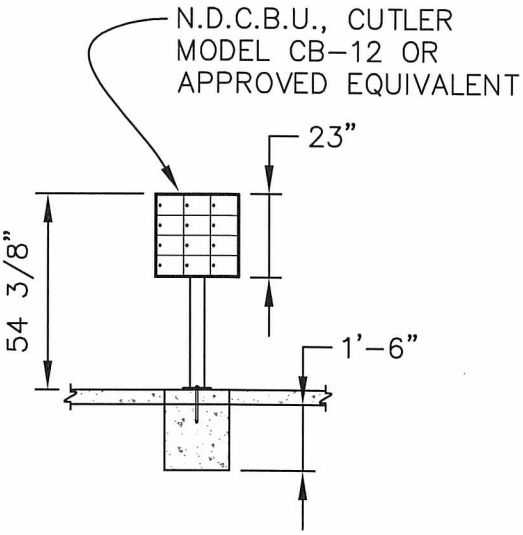

FRONT VIEW

NOTE:

MAILBOX LOCATIONS SHALL BE COORDINATED WITH THE SERVING POST OFFICE AND APPROVED BY THE CITY OF AUBURN.

APPROVED BY CITY ENGINEER:	DATE: 8/5/2016	CITY OF AUBURN WASHINGTON	NEIGHBORHOOD DELIVERY & COLLECTION BOX UNIT (N.D.C.B.U.) INSTALLATION
COMMUNITY DEVELOPMENT & PUBLIC WORKS DEPT.			STANDARD DETAIL: T-07.1

Plotted by: Craig Dobyns on 7/13/2016 File location: M:\Construction Standard Details\Approved Drawing Files (dwg)\Traffic\STDETL-T-07.1

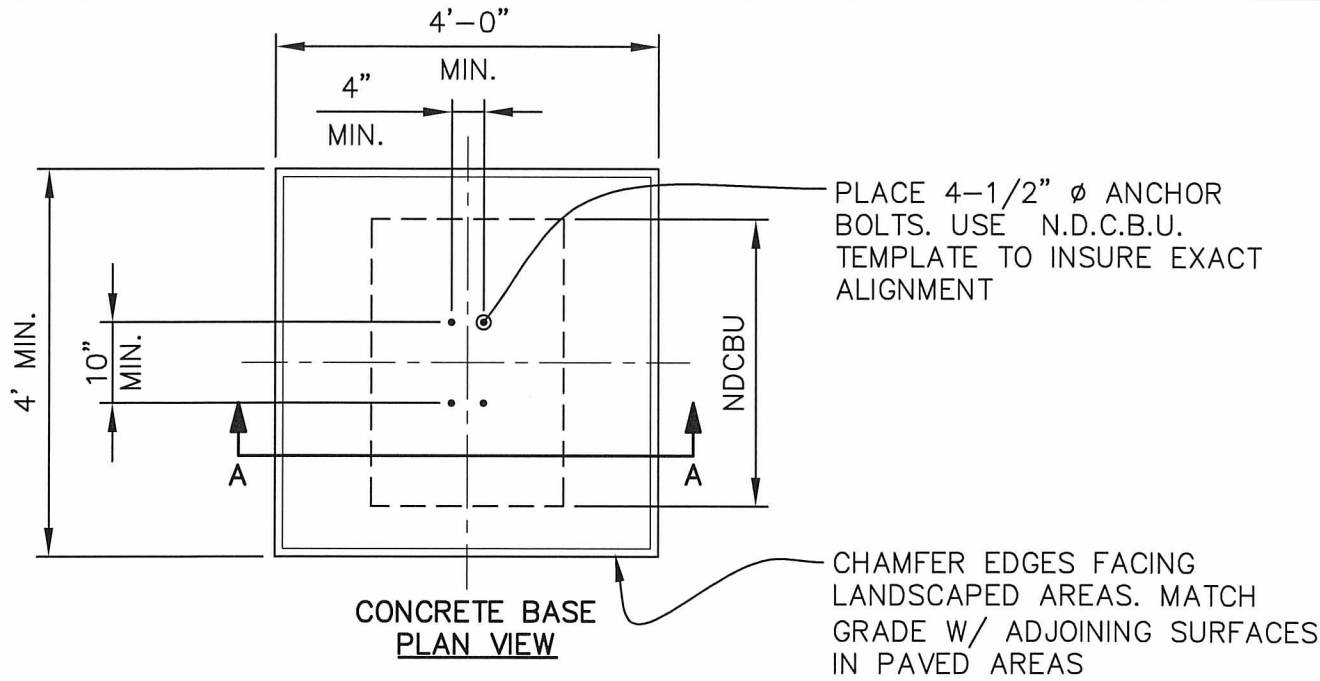

CONCRETE BASE
PLAN VIEW

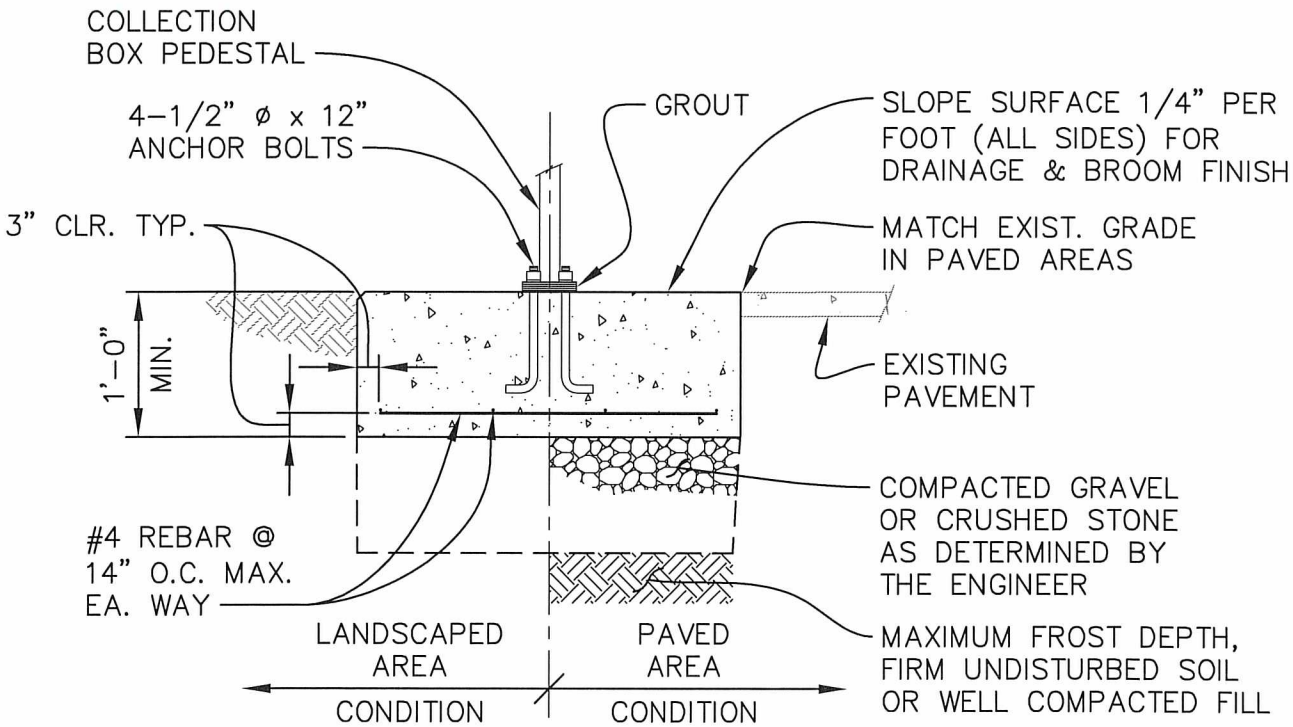

SECTION A-A

NOTES:

1. CONCRETE SHALL HAVE A COMPRESSIVE STRENGTH OF 3000 PSI AT 28 DAYS, CONTAIN 4% MIN. TO 6% MAX. AIR ENTRAINMENT AND BE PLACED WITH A 3-1/2" TO 4-1/2" SLUMP IN ACCORDANCE WITH ACI 301.
2. REINFORCING STEEL SHALL CONFORM TO ASTM A615, GRADE 40.
3. ANCHOR BOLTS SHALL CONFORM TO ASTM A307, GALVANIZED CARBON STEEL OR ASTM A193, B8M (316) STAINLESS STEEL.
4. GROUT SHALL BE NON-SHRINK, NON-METALLIC.

APPROVED BY CITY ENGINEER:	DATE: 8/5/2016	CITY OF AUBURN WASHINGTON	NEIGHBORHOOD DELIVERY & COLLECTION BOX UNIT (N.D.C.B.U.) SINGLE UNIT
COMMUNITY DEVELOPMENT & PUBLIC WORKS DEPT.			STANDARD DETAIL: T-08.1

Plotted by: Craig Dobyns on 7/13/2016 File location: M:\Construction Standard Details\Approved Drawing Files (dwg)\Traffic\STDETL-T-08.1

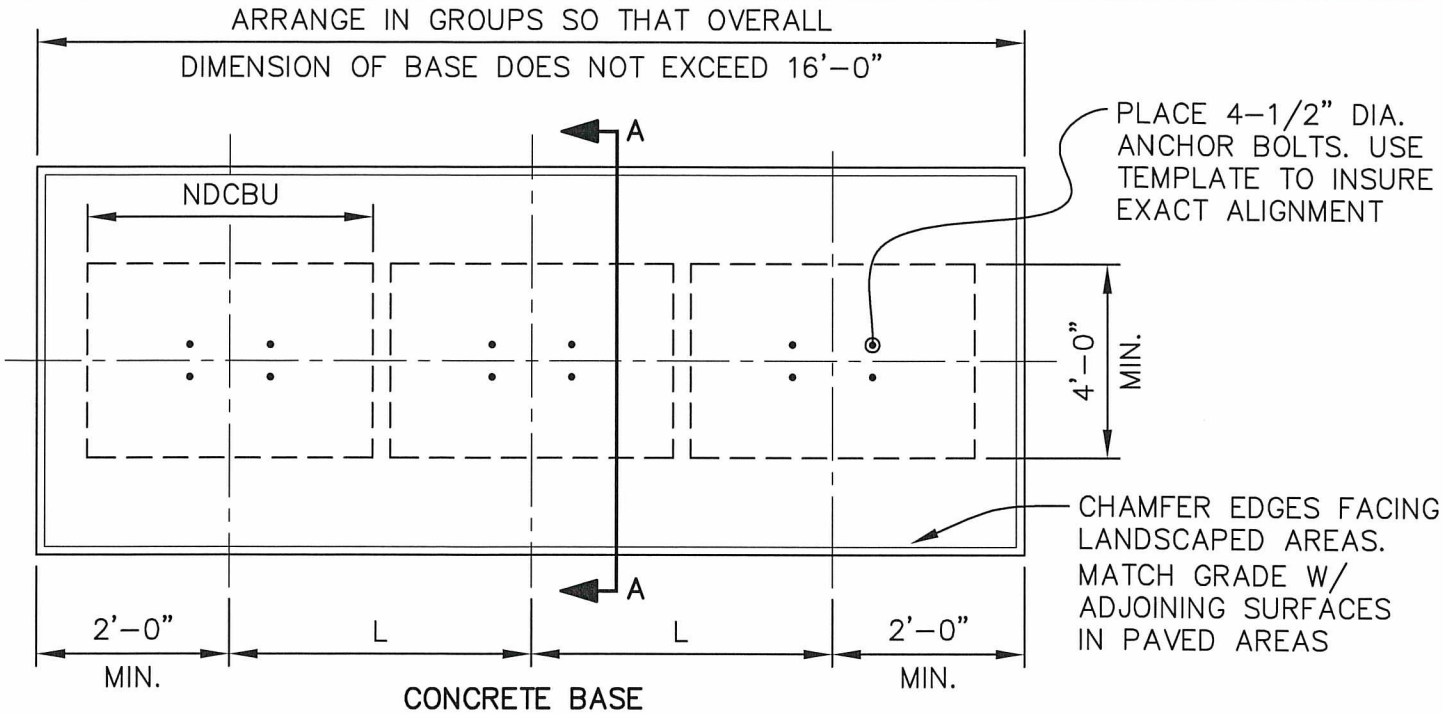

CONCRETE BASE
PLAN VIEW

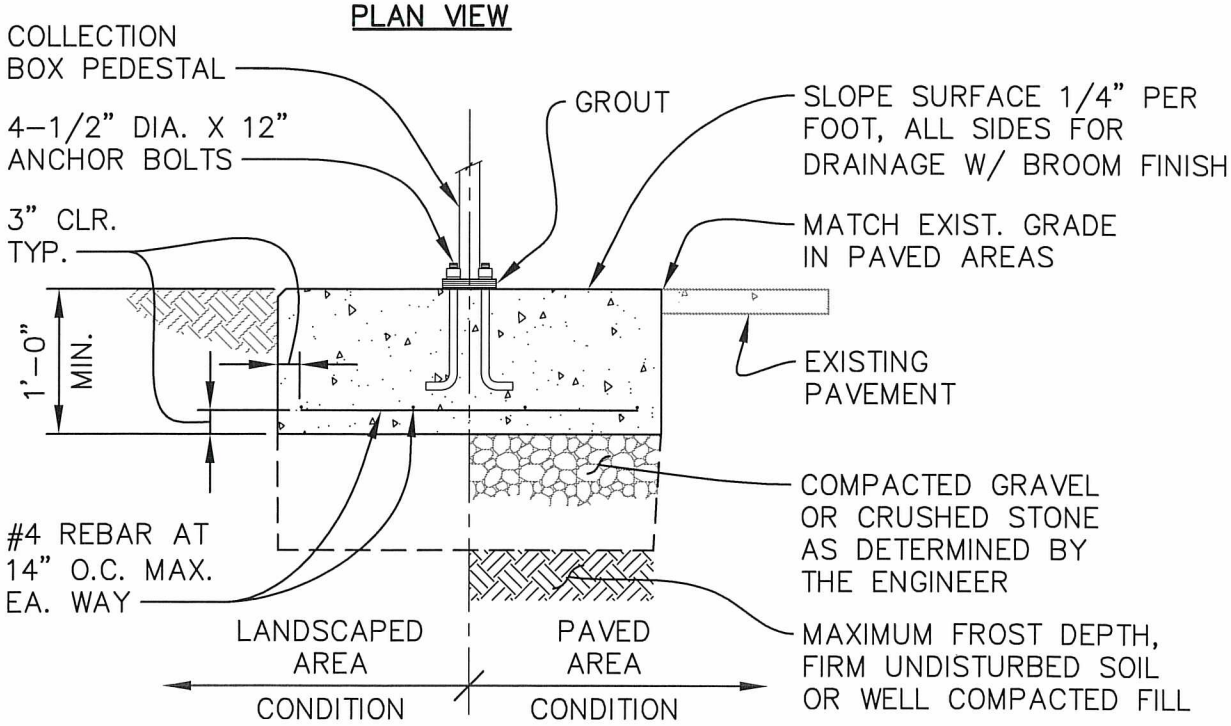

SECTION A-A

NOTES:

1. CONCRETE BASE DIMENSION "L" IS THE WIDTH OF NDCBU PLUS 2". FOUNDATION CAN BE EXTENDED BY LENGTH "L" TO ACCOMODATE ADDITIONAL UNITS.
2. CONCRETE SHALL HAVE A COMPRESSIVE STRENGTH OF 3000 PSI AT 28 DAYS, CONTAIN 4% MIN. TO 6% MAX. AIR ENTRAINMENT AND BE PLACED W/ A 3 1/2" TO 4 1/2" SLUMP IN ACCORDANCE W/ ACI 301.
3. REINFORCING STALL SHALL CONFORM TO ASTM A615, GRADE 40.
4. ANCHOR BOLTS SHALL CONFORM TO ASTM A307, GALVANIZED CARBON STEEL OR ASTM A193, B8M (316) STAINLESS STEEL.

APPROVED BY CITY ENGINEER:	DATE:	CITY OF AUBURN WASHINGTON	NEIGHBORHOOD DELIVERY & COLLECTION BOX UNIT (N.D.C.B.U.) MULTIPLE UNITS
	8/5/2016		
COMMUNITY DEVELOPMENT & PUBLIC WORKS DEPT.		STANDARD DETAIL:	T-09.1

Plotted by: Craig Dobyns on 7/13/2016 File location: M:\Construction Standard Details\Approved Drawing Files (dwg)\Traffic\STDETL-T-09.1

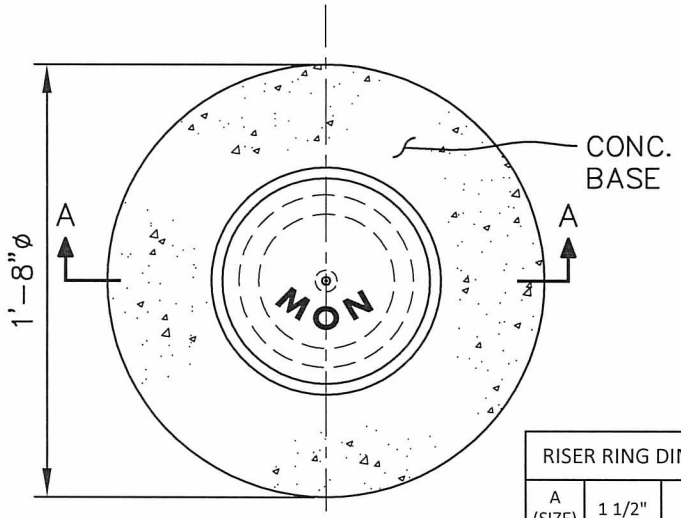

PLAN
NTS

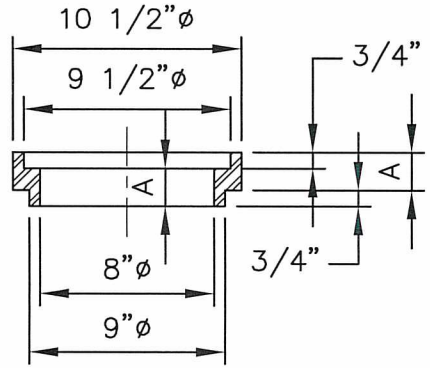

RISER RING SECTION
NTS

RISER RING DIMENSIONS			
A (SIZE)	1 1/2"	2"	3"

NOTES:

1. DIMENSIONS MAY VARY ACCORDING TO MANUFACTURER.
2. BASE TO BE PLACED ON A WELL COMPACTED FOUNDATION.
3. MONUMENT CASE TO BE INSTALLED BY CONTRACTOR.
4. SEE WSDOT STD. PLAN A-10.20 FOR MONUMENT (BRASS DISC) TYPE TO PLACE IN 2" O.D. GALVANIZED PIPE.

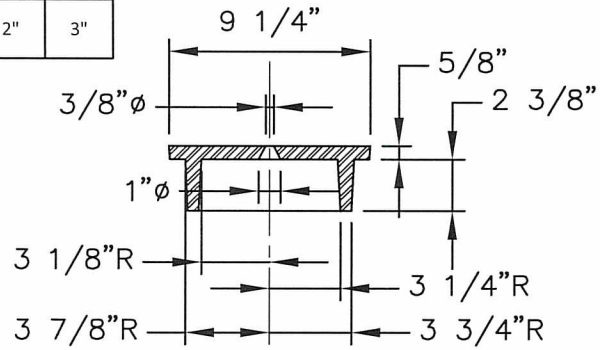

COVER SECTION
NTS

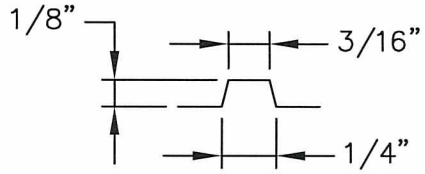

LETTER SECTION
NTS

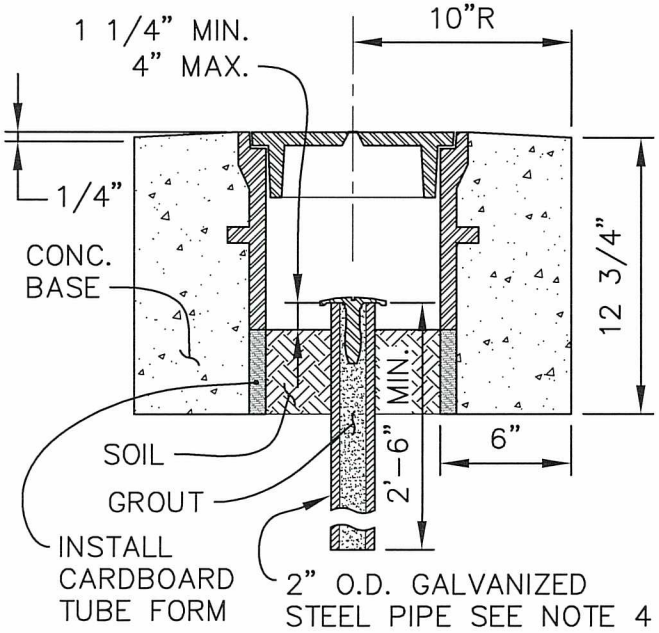

SECTION A-A
NTS

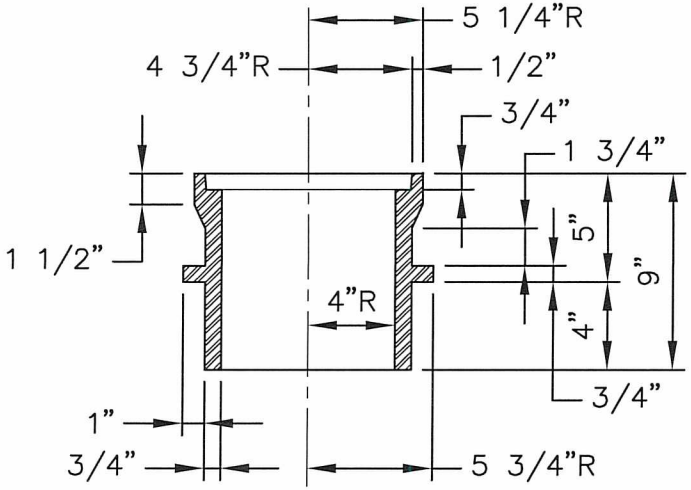

CASE SECTION
NTS

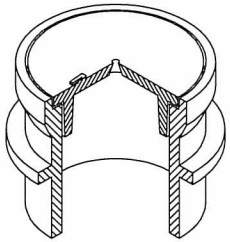

ISOMETRIC
NTS

APPROXIMATE WEIGHTS	
CASE	60 LBS.
COVER	19 LBS.
TOTAL	79 LBS.

APPROVED BY CITY ENGINEER: [signature] DATE: 8/5/2016

CITY OF AUBURN WASHINGTON

COMMUNITY DEVELOPMENT & PUBLIC WORKS DEPT.

POURED IN PLACE MONUMENT TYPE 'B' MODIFIED

STANDARD DETAIL: T-11.1

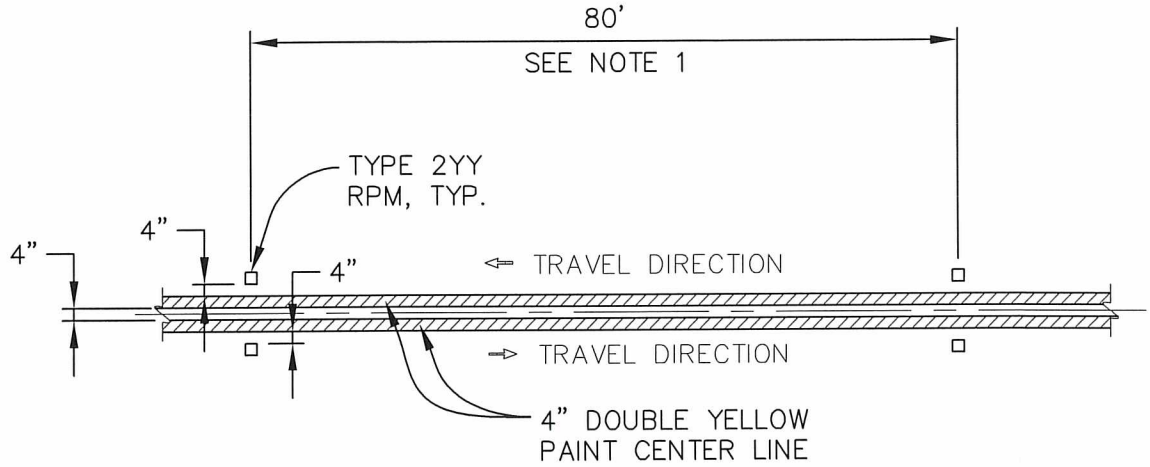

PLAN
DOUBLE CENTERLINE

NOTES:

1. RAISED PAVEMENT MARKERS SHALL BE SPACED AT 80' (FT.) INTERVALS ON TANGENTS AND ON HORIZONTAL CURVES W/ A RADIUS OF 1500' (FT.) OR MORE, AND 40' (FT.) INTERVALS ON HORIZONTAL CURVES HAVING RADII OF LESS THAN 1500' (FT.).

APPROVED BY CITY ENGINEER: FOR Jacob Sweeting	DATE: 10/14/16	CITY OF AUBURN WASHINGTON	DOUBLE CENTERLINE WITH RAISED PAVEMENT MARKERS
COMMUNITY DEVELOPMENT & PUBLIC WORKS DEPT.			STANDARD DETAIL: T-12.1

Plotted by: Craig Dobyns on 9/12/2016 File location: M:\Construction Standard Details\Approved Drawing Files (dwg)\Traffic\STDETL-T-12.1

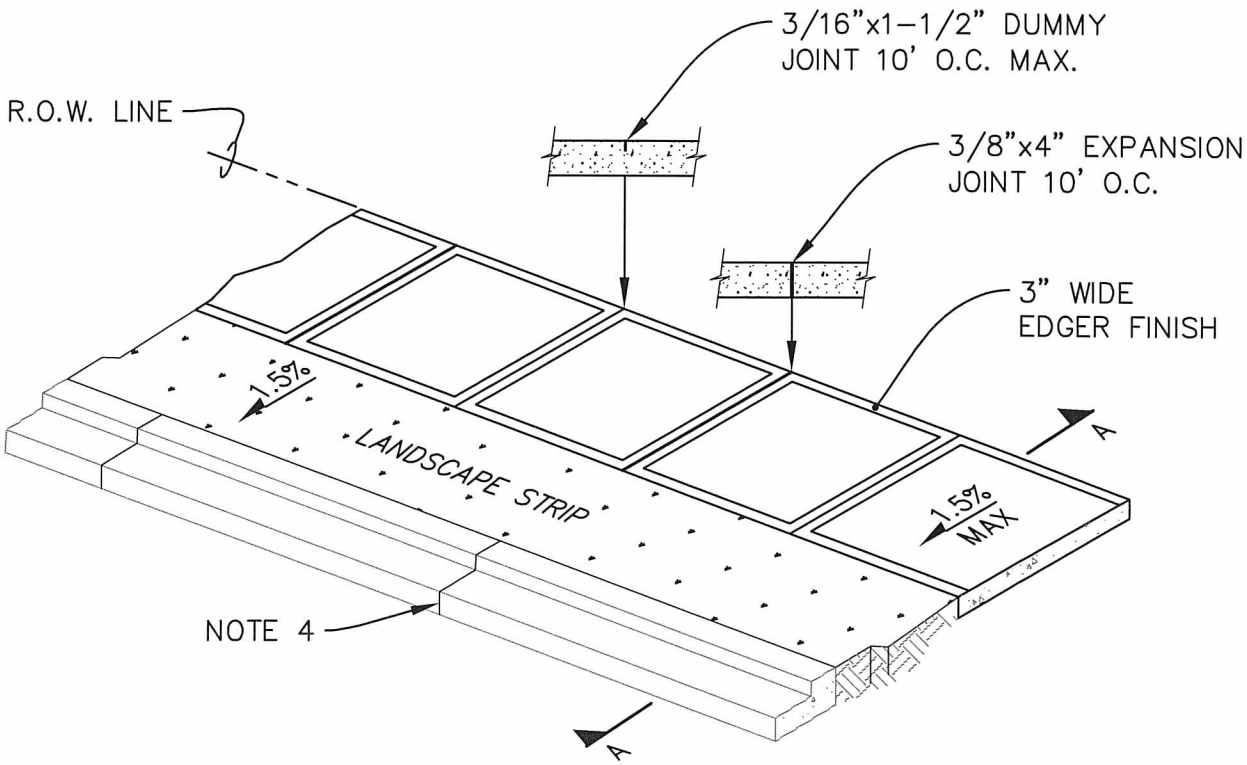

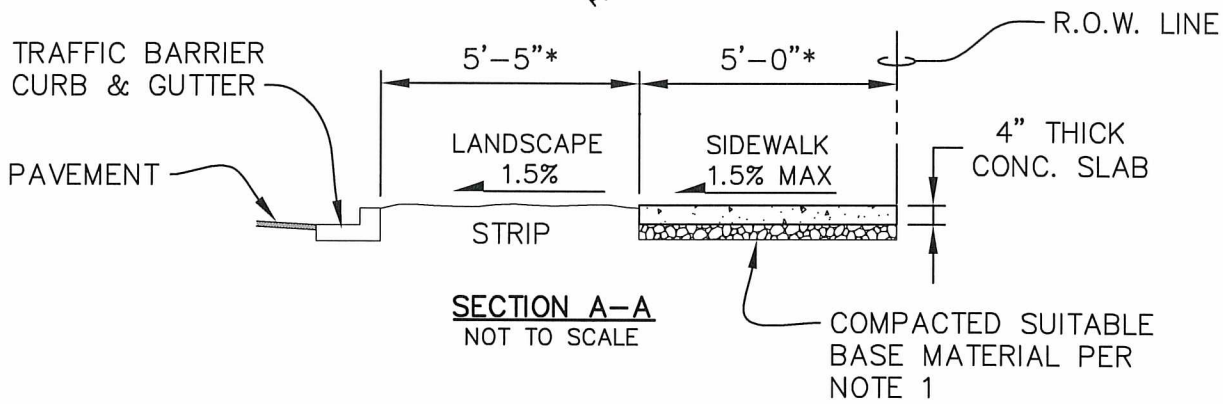

SECTION A-A
NOT TO SCALE

*SIDEWALK AND LANDSCAPE WIDTHS SHALL BE PER STREET CLASSIFICATION.

NOTES:

1. PLACE CEMENT CONCRETE ON COMPACTED SUITABLE BASE, AS PER SPECIFICATION SECTION 2-06.3 AND AS APPROVED BY THE ENGINEER.
2. CEMENT CONCRETE SHALL BE CLASS 3000 PER SPECIFICATION SECTION 6-02.3 WITH 5% AIR ENTRAINMENT.
3. INSPECTION REQUIRED FOR FORM AND SUB GRADE APPROVAL BEFORE POURING CONCRETE.
4. MATCH JOINTS ON SIDEWALK WITH JOINTS ON CURB OR AT 10' O.C.

APPROVED BY CITY ENGINEER:	DATE:	CITY OF AUBURN WASHINGTON	SIDEWALK WITH LANDSCAPE STRIP
	8/5/2016		
COMMUNITY DEVELOPMENT & PUBLIC WORKS DEPT.			STANDARD DETAIL: T-13.1

Plotted by: Craig Dobyns on 7/13/2016 File location: M:\Construction Standard Details\Approved Drawing Files (dwg)\Traffic\STDETL-T-13.1

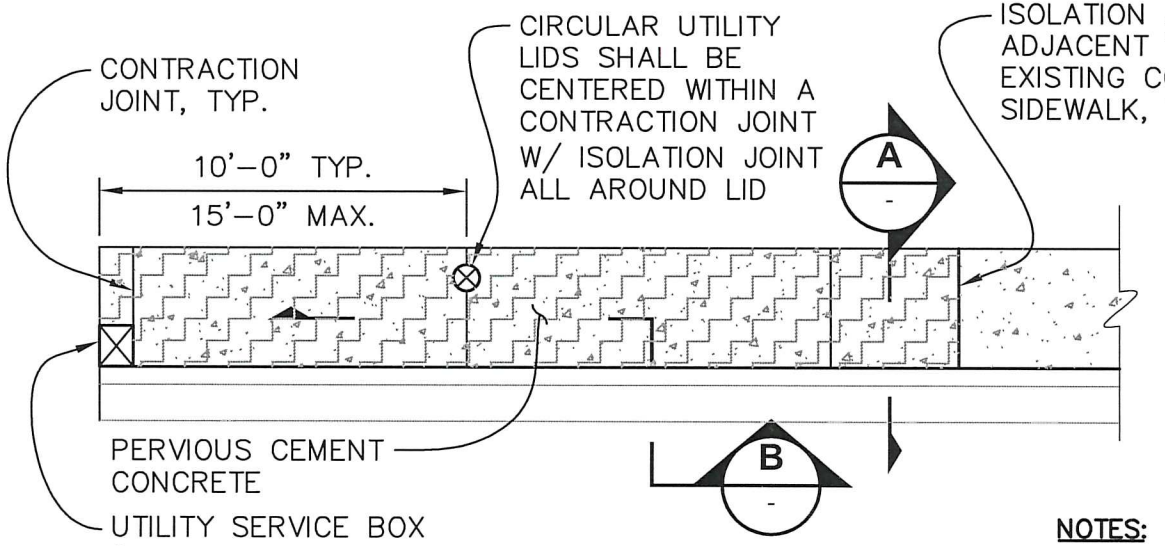

PLAN

NTS

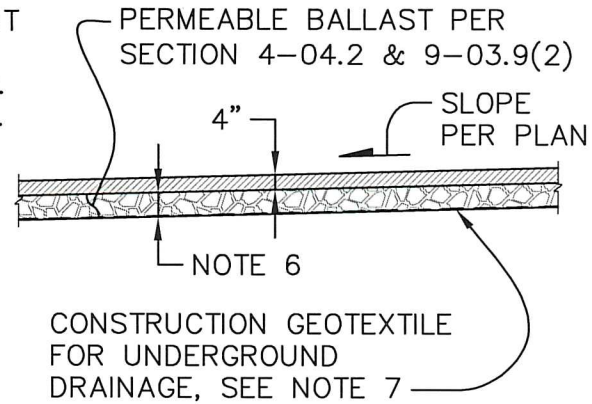

SECTION B

NTS

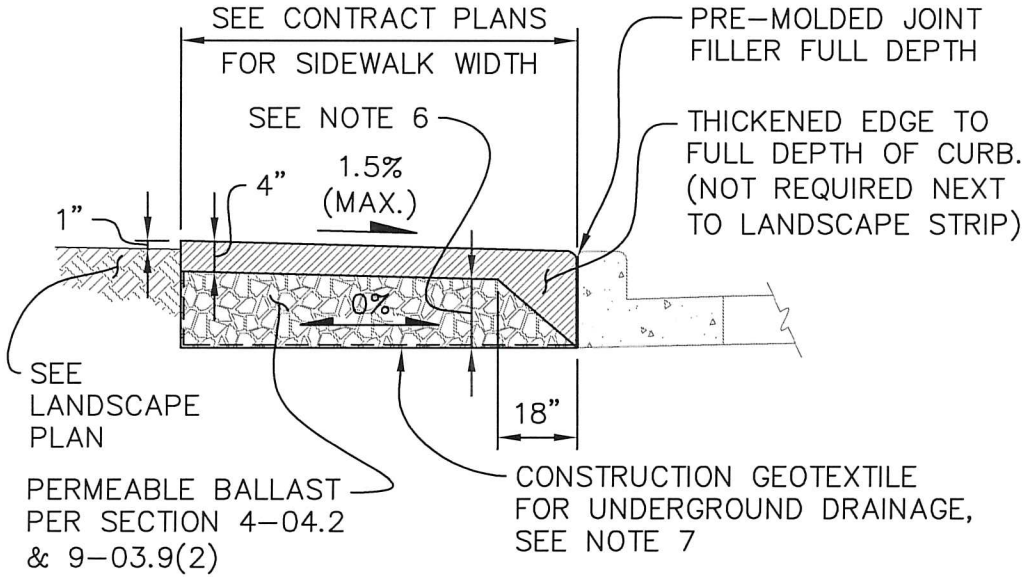

SECTION A

NTS

NOTES:

1. ISOLATION JOINTS SHALL BE FULL DEPTH WITH 3/8" PREMOLDED JOINT FILLER.
2. CONTRACTION JOINTS SHALL HAVE A MINIMUM DEPTH OF 1/3 OF THE PERVIOUS CONCRETE THICKNESS AND 1/8" MAXIMUM WIDTH (UNLESS OTHERWISE APPROVED BY THE ENGINEER).
3. ALL JOINTS SHALL BE CLEAN & EDGED WITH A 1/2" RADIUS EDGER.
4. SUBGRADE PREPARATION SHALL BE IN ACCORDANCE WITH SECTION 2-06.3(3) (SUBGRADE FOR PERMEABLE PAVEMENTS). ALL SOFT & YIELDING FOUNDATION MATERIAL SHALL BE REMOVED & REPLACED WITH PERMEABLE BALLAST
5. FOR BALLAST DEEPER THAN CURB, PROVIDE A GEOMEMBRANE BARRIER BETWEEN PERMEABLE BALLAST & ROAD SECTION UNLESS ADJACENT ROAD IS PERMEABLE AS REQUIRED BY THE ENGINEER.
6. DEPTH OF PERMEABLE BALLAST VARIES. SEE SWMM FOR SPECIFIC REQUIREMENTS.
7. CONSTRUCTION GEOSYNTHETIC MAY BE REQUIRED BETWEEN NATIVE SOILS & PERMEABLE BALLAST IF DIRECTED BY THE ENGINEER. WHEN REQUIRED, THE GEOTEXTILE SHALL BE CLASS A, MODERATE SURVIVABILITY PER SECTION 9.33.2(1) TABLES 1 & 2 (UNLESS OTHERWISE APPROVED BY THE ENGINEER).

APPROVED BY CITY ENGINEER: [signature]

DATE: 8/5/2016

CITY OF AUBURN WASHINGTON

PERVIOUS CEMENT CONCRETE SIDEWALK

COMMUNITY DEVELOPMENT & PUBLIC WORKS DEPT.

STANDARD DETAIL: T-14.1

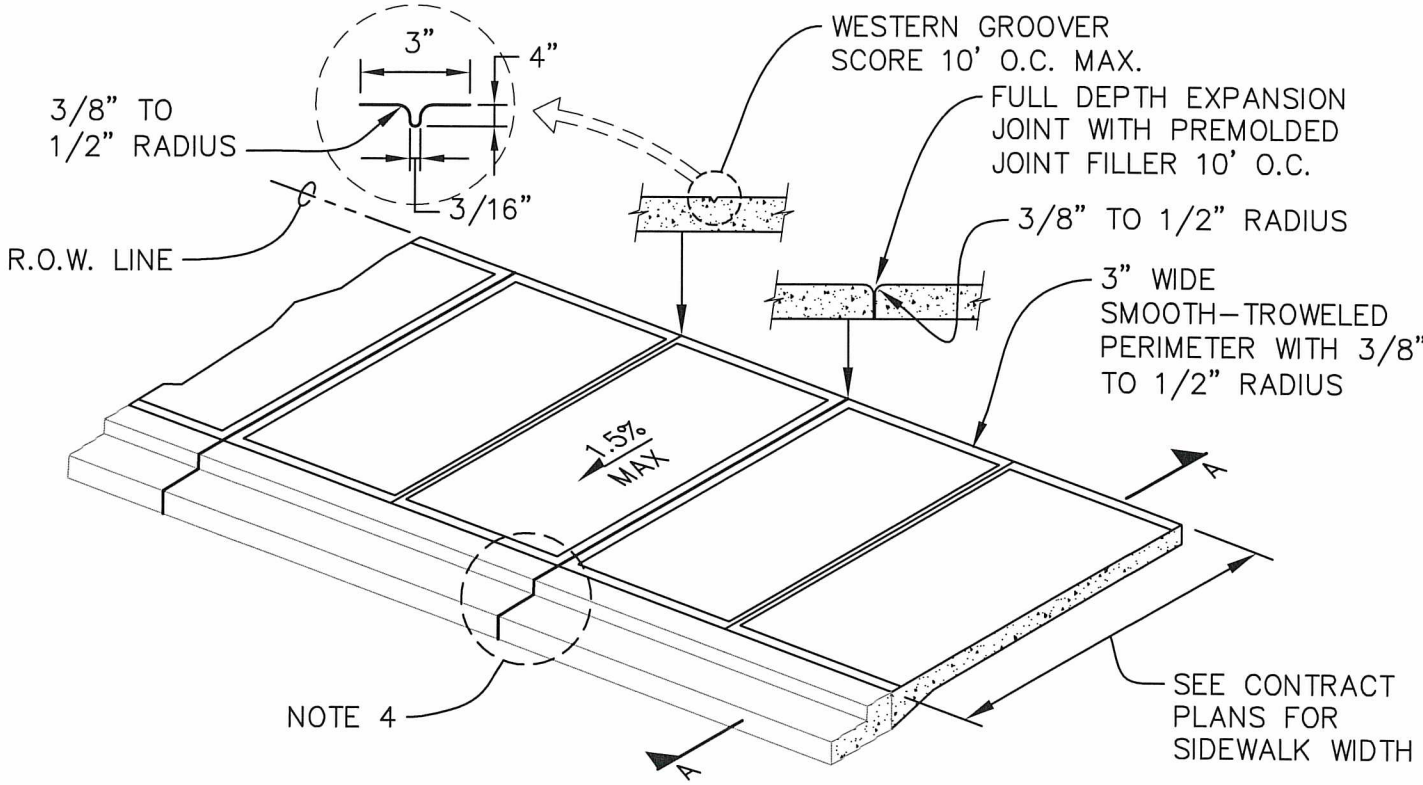

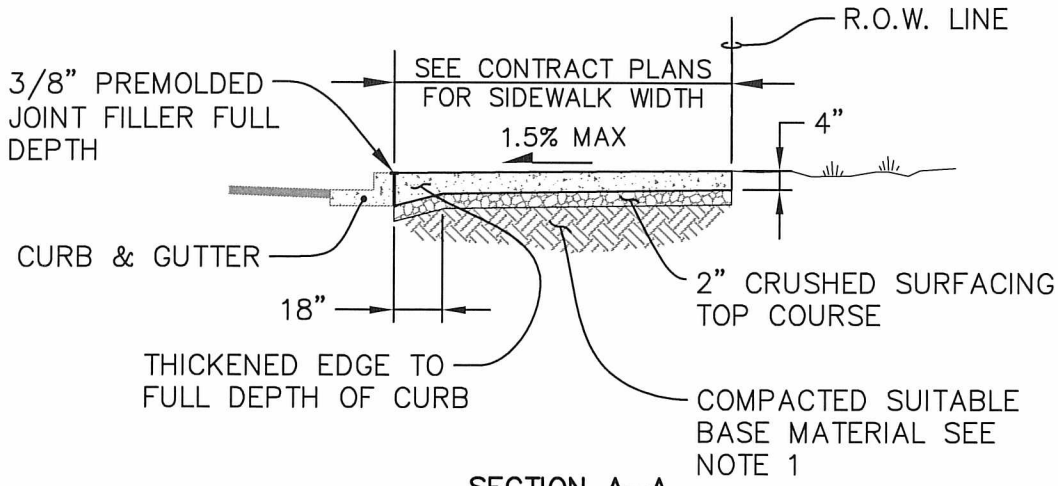

SECTION A–A
NOT TO SCALE

NOTES:

1. PLACE CEMENT CONCRETE ON COMPACTED SUITABLE BASE, AS PER SPECIFICATION SECTION 2–06.3 AND AS APPROVED BY THE ENGINEER.
2. CEMENT CONCRETE SHALL BE CLASS 3000 PER SPECIFICATION SECTION 6–02.3.
3. INSPECTION REQUIRED FOR FORM AND SUB GRADE APPROVAL BEFORE POURING CONCRETE.
4. MATCH EXPANSION JOINTS ON SIDEWALK WITH EXPANSION JOINTS ON CURB OR AT 10' O.C.

APPROVED BY CITY ENGINEER:	DATE:	CITY OF AUBURN WASHINGTON	CEMENT CONCRETE SIDEWALK WITHOUT LANDSCAPE STRIP
COMMUNITY DEVELOPMENT & PUBLIC WORKS DEPT.			STANDARD DETAIL: T–15.1

Plotted by: Craig Dobyns on 8/1/2016 File location: M:\Construction Standard Details\Approved Drawing Files (dwg)\Traffic\STDETL-T-15.1

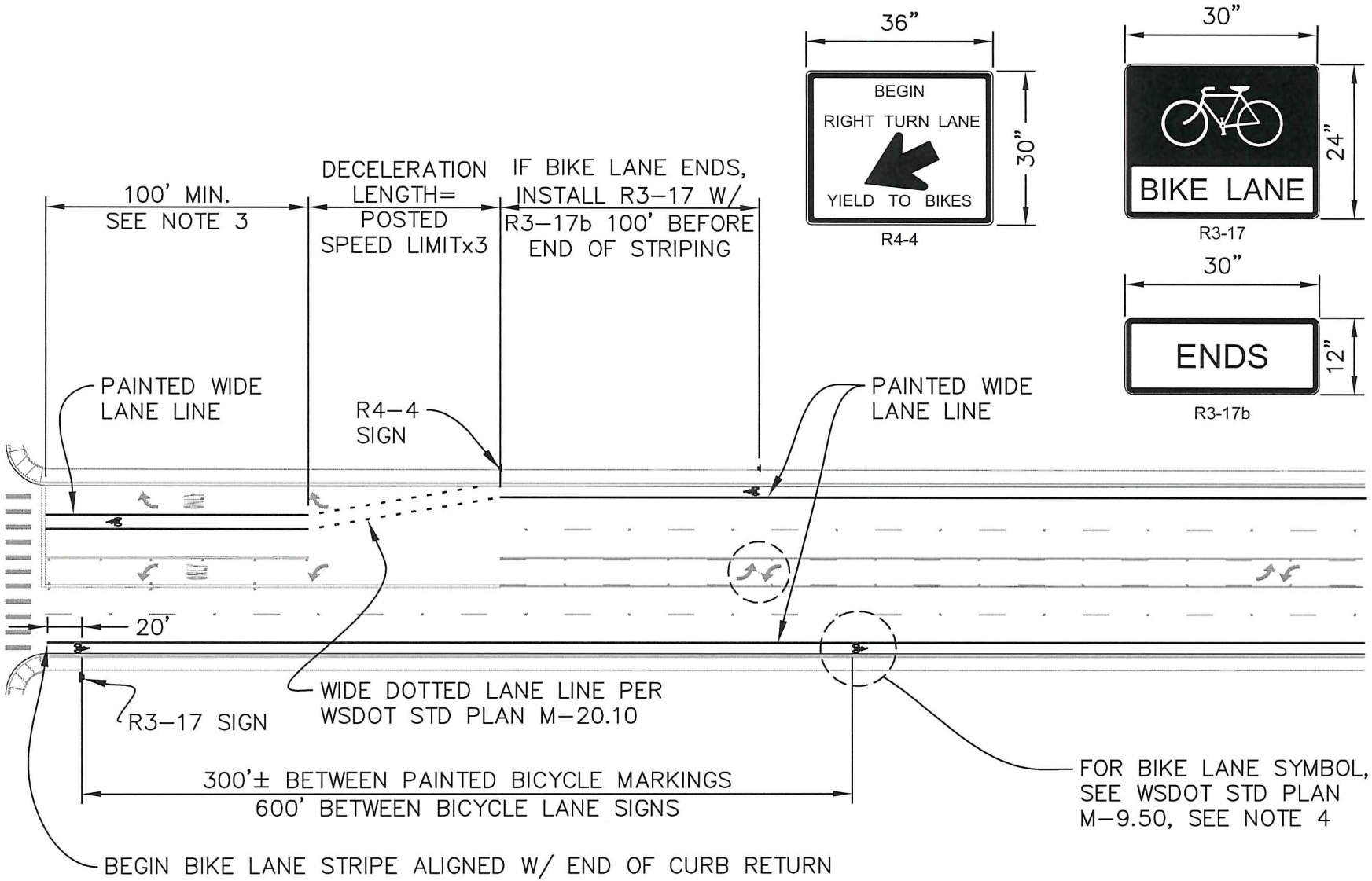

NOTES:

1. BIKE LANE WIDTH SHALL BE 6' WIDE, MINIMUM.
2. RIGHT TURN LANE LENGTH SHALL BE DETERMINED BY THE 95TH PERCENTILE OF THE QUEUE LENGTH VALUE.
3. LENGTH SHORTER THAN 100' MAY BE JUSTIFIED WITH TRAFFIC STUDIES.
4. BICYCLE RIDER SYMBOL DESIGNATING BICYCLE LANE SHALL BE INSTALLED WITH WHITE PAINT.

APPROVED BY CITY ENGINEER:

DATE: 8/5/2016

CITY OF AUBURN WASHINGTON

BICYCLE LANE MARKINGS

COMMUNITY DEVELOPMENT & PUBLIC WORKS DEPT.

STANDARD DETAIL: T-17.1

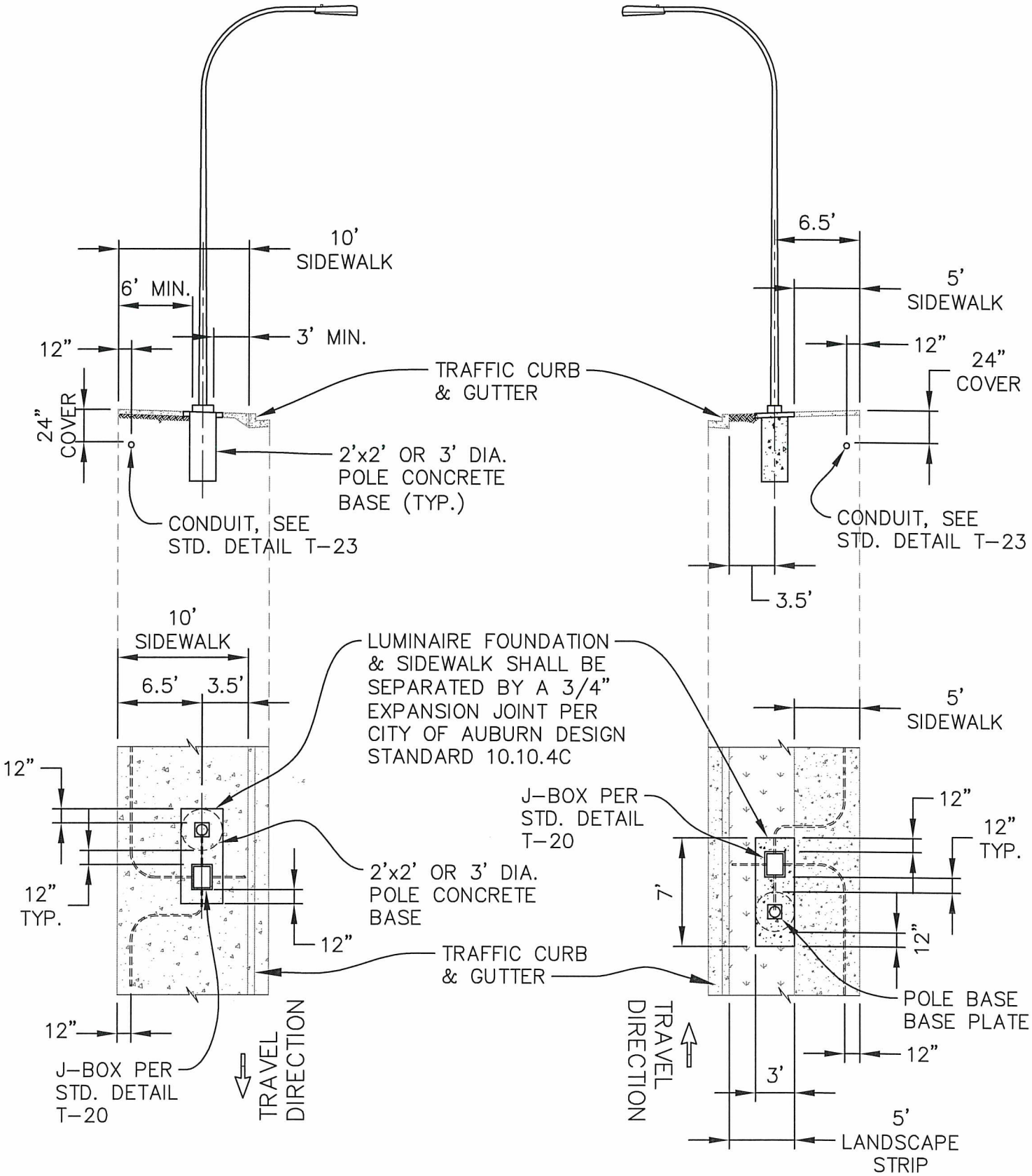

APPROVED BY CITY ENGINEER:	DATE:	CITY OF AUBURN WASHINGTON	LUMINAIRE AND CONDUIT LAYOUT DETAIL
	8/5/2016		
COMMUNITY DEVELOPMENT & PUBLIC WORKS DEPT.			STANDARD DETAIL: T-18.1

Plotted by: Craig Dobyns on 7/13/2016 File location: M:\Construction Standard Details\Approved Drawing Files (dwg)\Traffic\STDETL-T-18.1

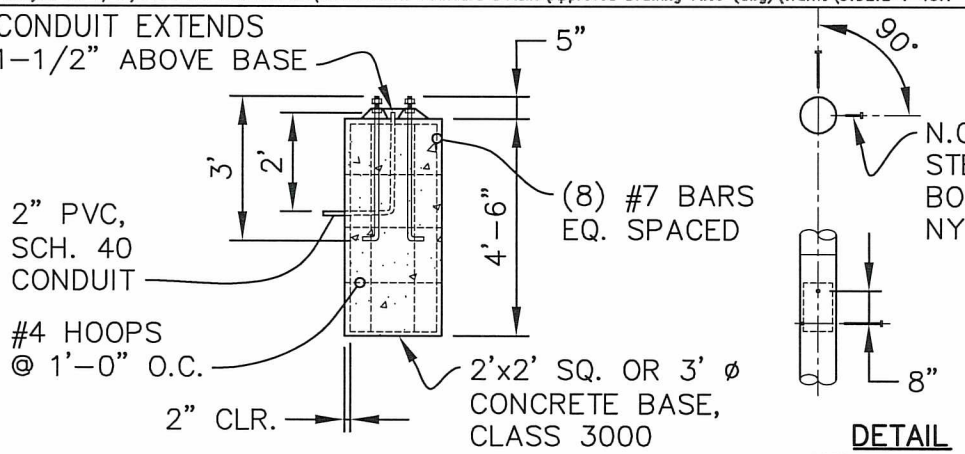

SECTION A-A
NOT TO SCALE

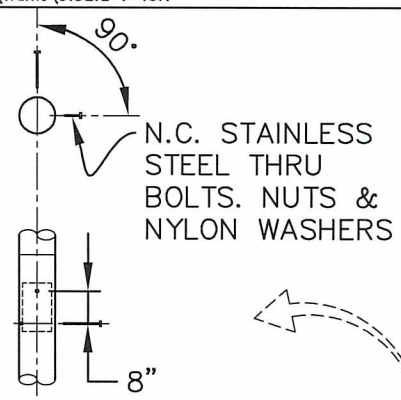

DETAIL
NOT TO SCALE

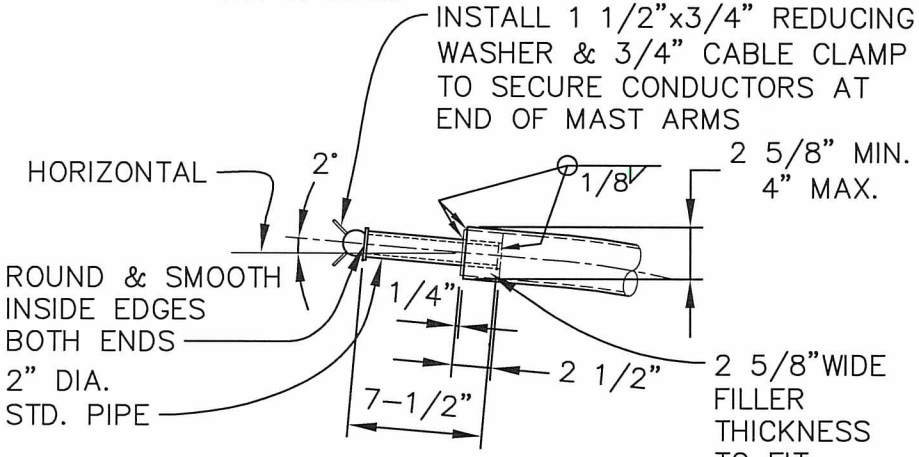

MAST ARM END DETAIL
NOT TO SCALE

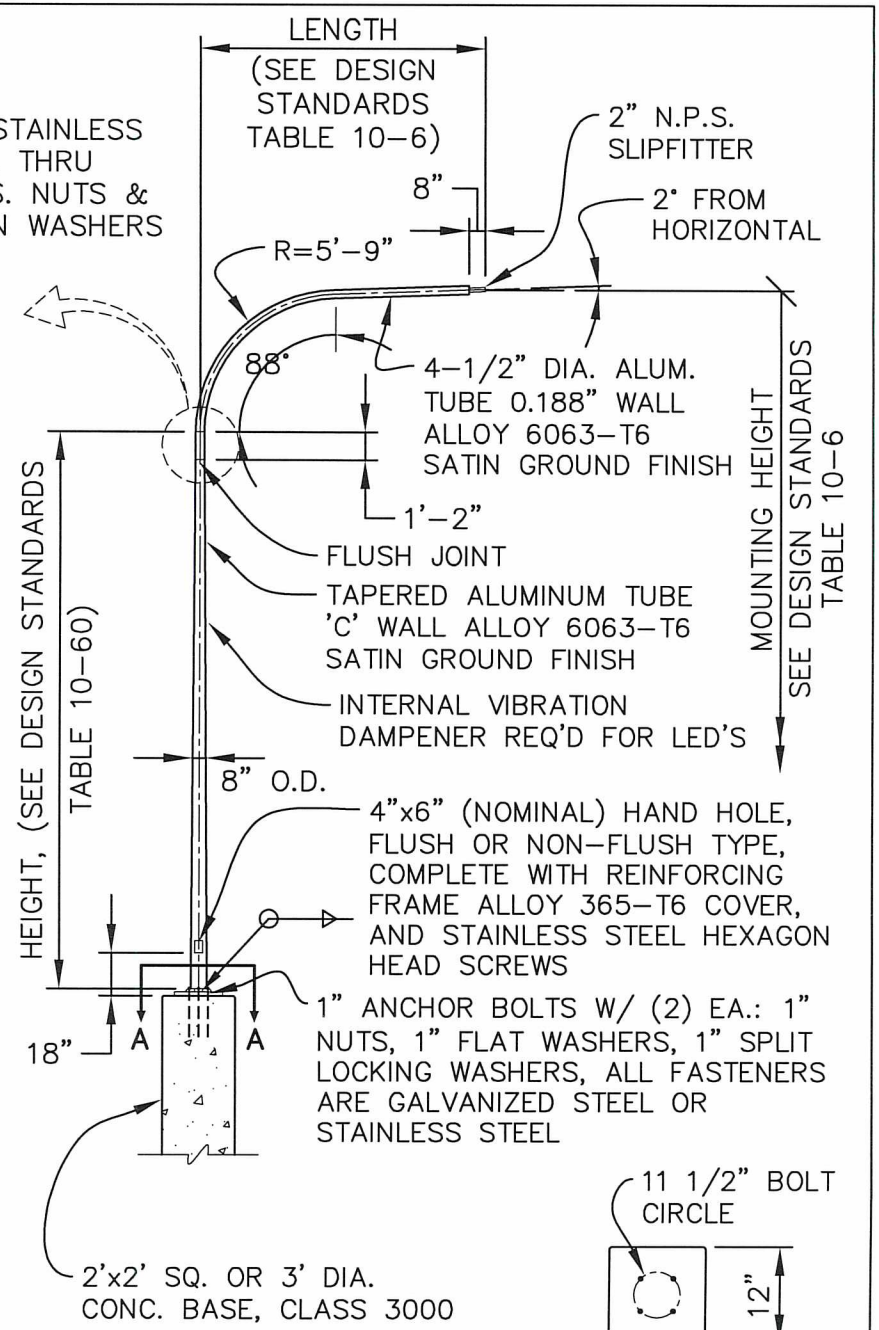

ELEVATION
NOT TO SCALE

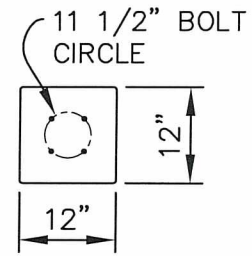

POLE BASE PLAN
NOT TO SCALE

NOTES:

1. POLE ASSEMBLIES DESIGNED TO SUPPORT MAXIMUM LUMINAIRE SIZE OF 1.5 SQ. FT. E.P.A. AND 60 LBS. IN A 100 MPH ISOTACH/130 MPH GUST VELOCITY WIND.
2. 4043 FILLER WIRE USED FOR WELDING.
3. ONLY THE BASE FLANGE WELDS ARE HEAT TREATED.
4. BASE FLANGE SHALL ACCOMMODATE 11" TO 12" BOLT CIRCLE.
5. 1"-8NC STEEL ANCHOR BOLT ASTM A576, AISI GRADE 1021-1046, 50,000 PSI=MIN. YIELD MEAN DIA. OF ROD STOCK 0.908± 0.011", OUT OF ROUND TOLERANCE: ± 0.012" ROLLED OR CUT THREADS PER A307, CLASS 2A, TOP 10" GALV. PER ASTM A153 COMPLETE WITH (8) 1" 8NC GALV. STL. HEX NUTS & (8) 1" GALV. STL. FLAT WASHERS.

APPROVED BY CITY ENGINEER:

DATE: 8/5/2016

CITY OF AUBURN WASHINGTON

COMMUNITY DEVELOPMENT & PUBLIC WORKS DEPT.

LUMINAIRE POLE

STANDARD DETAIL: T-19.1

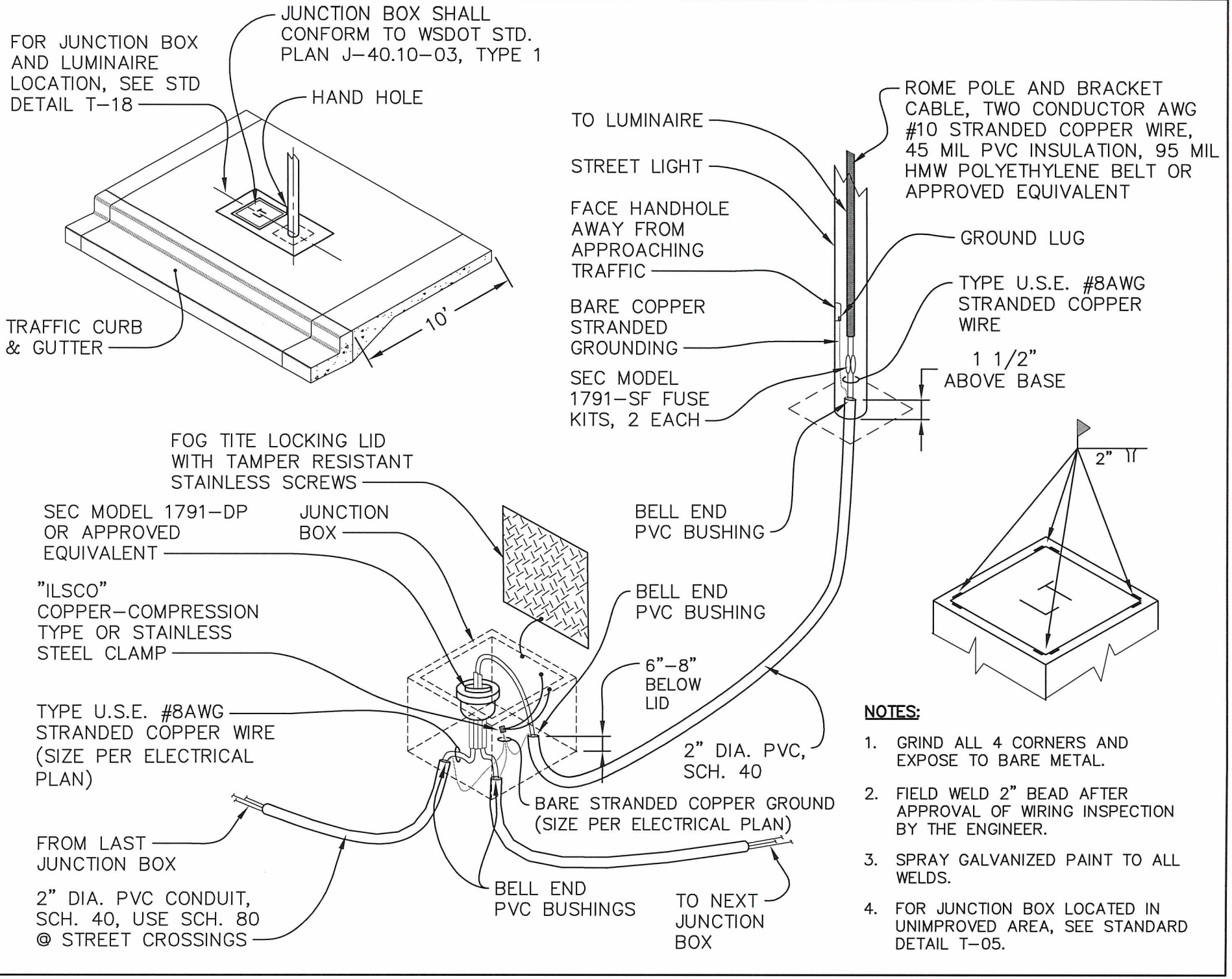

NOTES:

1. GRIND ALL 4 CORNERS AND EXPOSE TO BARE METAL.
2. FIELD WELD 2" BEAD AFTER APPROVAL OF WIRING INSPECTION BY THE ENGINEER.
3. SPRAY GALVANIZED PAINT TO ALL WELDS.
4. FOR JUNCTION BOX LOCATED IN UNIMPROVED AREA, SEE STANDARD DETAIL T-05.

APPROVED BY CITY ENGINEER: DATE: 8/5/2016

CITY OF AUBURN WASHINGTON

UNIFORM LUMINAIRE WIRING DETAIL

COMMUNITY DEVELOPMENT & PUBLIC WORKS DEPT. STANDARD DETAIL: T-20.1

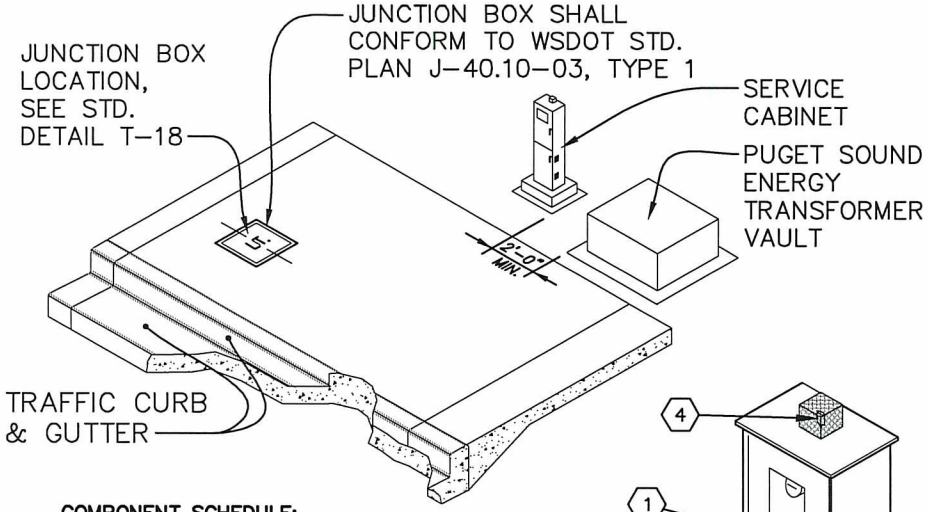

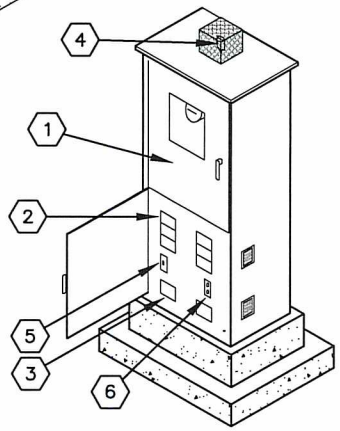

COMPONENT SCHEDULE:

1. METERBASE: 100 AMP, 4 JAW, AW #114TB, SAFETY SOCKET, WITH 5th JAW AT 9:00 POSITION (CONTRACTOR TO VERIFY WITH SERVING UTILITY)
2. PANELBOARD: 120/240 VAC, 100 AMP, 1 PHASE, 3 WIRE, COPPER BUS WESTINGHOUSE BAB BOLT-ON BREAKERS:
   - 1-100/2 MAIN
   - 2-20/2 ILLUMINATION BRANCH
   - 1-20/1 SIGNAL BRANCH
   - 1-20/1 GROUND FAULT RECEPTACLE BRANCH
   - 1-15/1 CONTROL CKT BRANCH
3. CONTACTOR: LIGHTING RATED, 2 POLE, 120 VAC COIL. 1-REQUIRED PER ILLUMINATION CKT
4. PHOTO ELECTRIC CELL: 1800 VA, 120 VAC, ALR #SST-IES (PER WSDOT SPEC.) FACING NORTH
5. PHOTO-CELL BYPASS SWITCH: SPST, 15 AMP, 277 VAC
6. GROUND FAULT RECEPTACLE: 120 VAC, DUPLEX 20 A
7. CABINET:

NEMA 3R, PADMOUNT, 1/8th INCH TYPE 50502-H32 ALUMINUM CONSTRUCTION. 2 SCREENED AND GASKETED VENTS.

DOORS: HEAVY DUTY CONCEALED HINGES (LIFT-OFF TYPE) STAINLESS STEEL VAULT HANDLES, PADLOCKABLE METER DOOR. BEST CX LOCK ON DISTRIBUTION DOOR. POLISHED WIRE GLASS WINDOW IN METER DOOR. CLOSED CELL NEOPRENE GASKET, CARD HOLDER

FINISH: WHITE INTERIOR

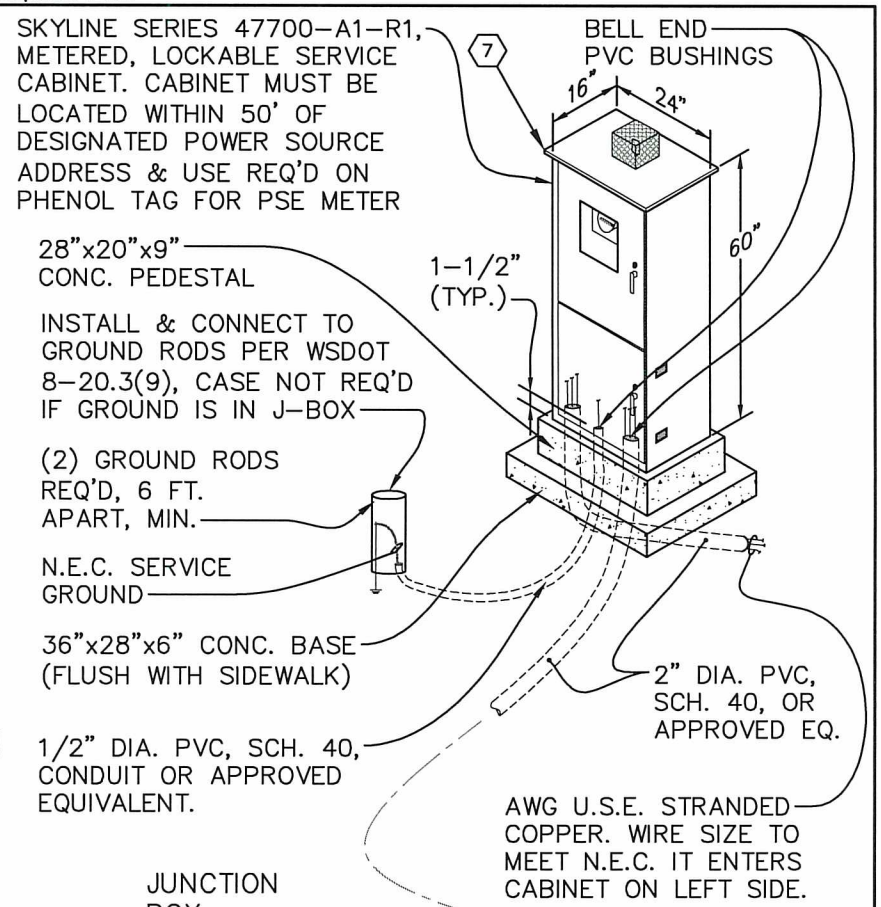

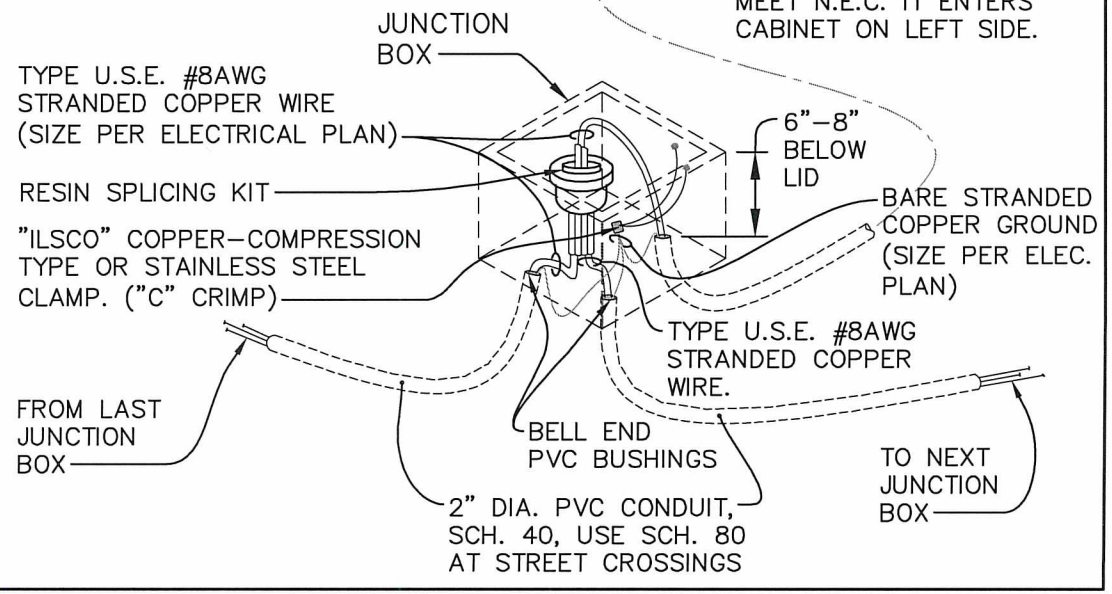

APPROVED BY CITY ENGINEER: FOR Chris Gruver 10/14/16 DATE:

CITY OF AUBURN WASHINGTON

POWER SERVICE CABINET DETAIL

COMMUNITY DEVELOPMENT & PUBLIC WORKS DEPT. STANDARD DETAIL: T-21.1

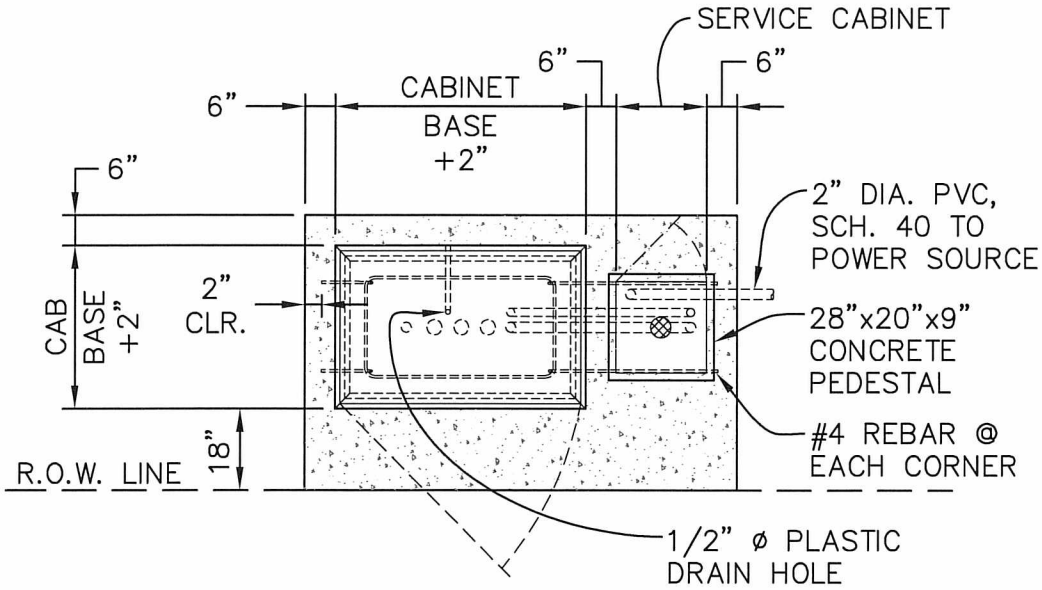

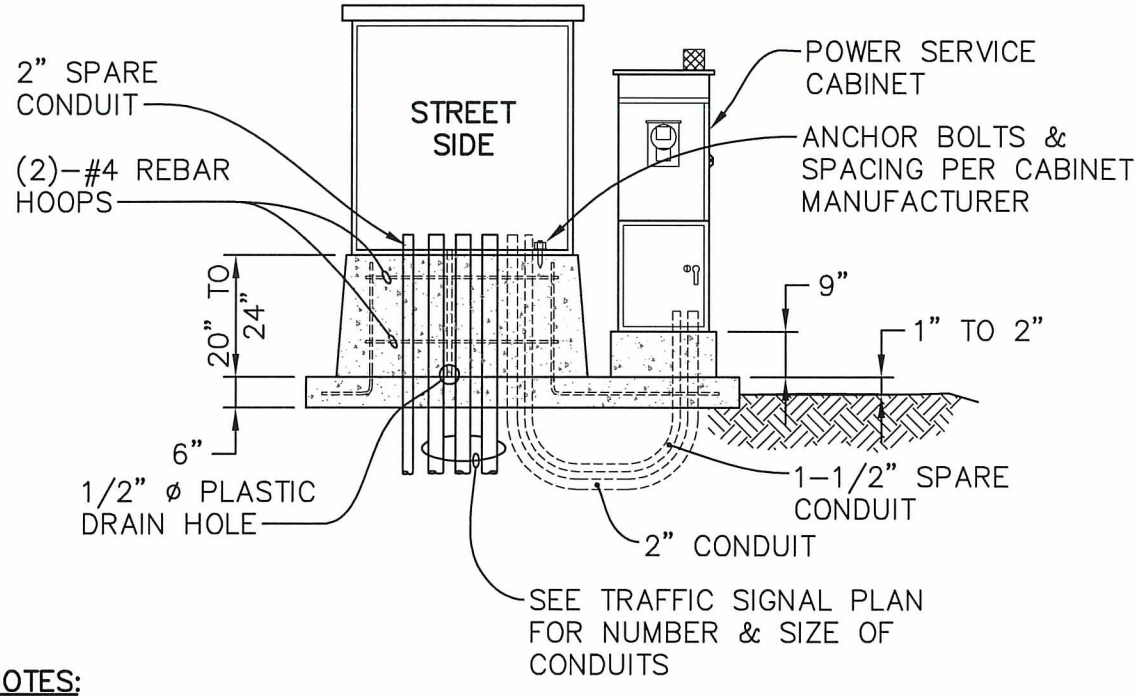

NOTES:

1. FOUNDATION SHALL BE CONSTRUCTED WITH CLASS 3000 CONCRETE WITH 3/4" CHAMFERED EDGE ON THE LOWER PAD.
2. CONDUITS SHALL BE EXTENDED NO MORE THAN 2" ABOVE CONCRETE SURFACE, ALIGNED, AND CENTERED ON CABINET.
3. CABINET POWER CONDUIT SHALL BE ON THE RIGHT SIDE WHEN FACING FRONT OF CABINET.
4. 2" DIA. SPARE CONDUIT SHALL BE INSTALLED AND RUN INTO THE JUNCTION BOX.
5. ENDS OF 1/2" DIA. DRAIN POLY TUBING SHALL BE CUT FLUSHED WITH CONCRETE SURFACE.
6. 1-1/2" DIA. SPARE CONDUIT SHALL BE INSTALLED AND RUN INTO SERVICE CABINET.

APPROVED BY CITY ENGINEER:	DATE: 8/5/2016	CITY OF AUBURN WASHINGTON	TRAFFIC SIGNAL CONTROLLER & FOUNDATION DETAIL
COMMUNITY DEVELOPMENT & PUBLIC WORKS DEPT.			STANDARD DETAIL: T-22.1

Plotted by: Craig Dobyns on 7/13/2016 File location: M:\Construction Standard Details\Approved Drawing Files (dwg)\Traffic\STDETL-T-22.1

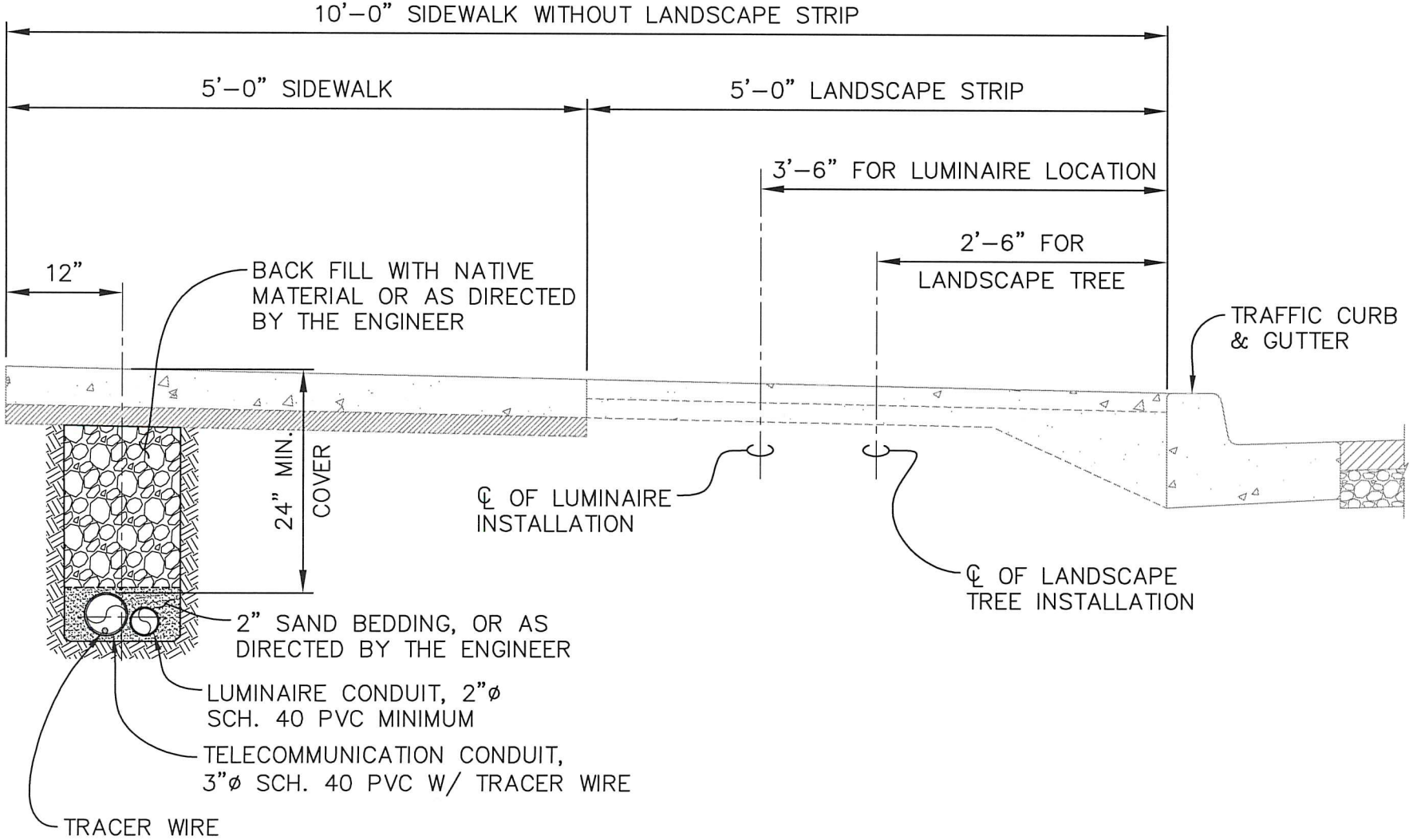

APPROVED BY CITY ENGINEER:

DATE: 8/5/2016

CITY OF AUBURN WASHINGTON

TELLECOMMUNICATION AND
LUMINAIRE ELECTRICAL TRENCH DETAIL

COMMUNITY DEVELOPMENT & PUBLIC WORKS DEPT.

STANDARD DETAIL: T-23.1

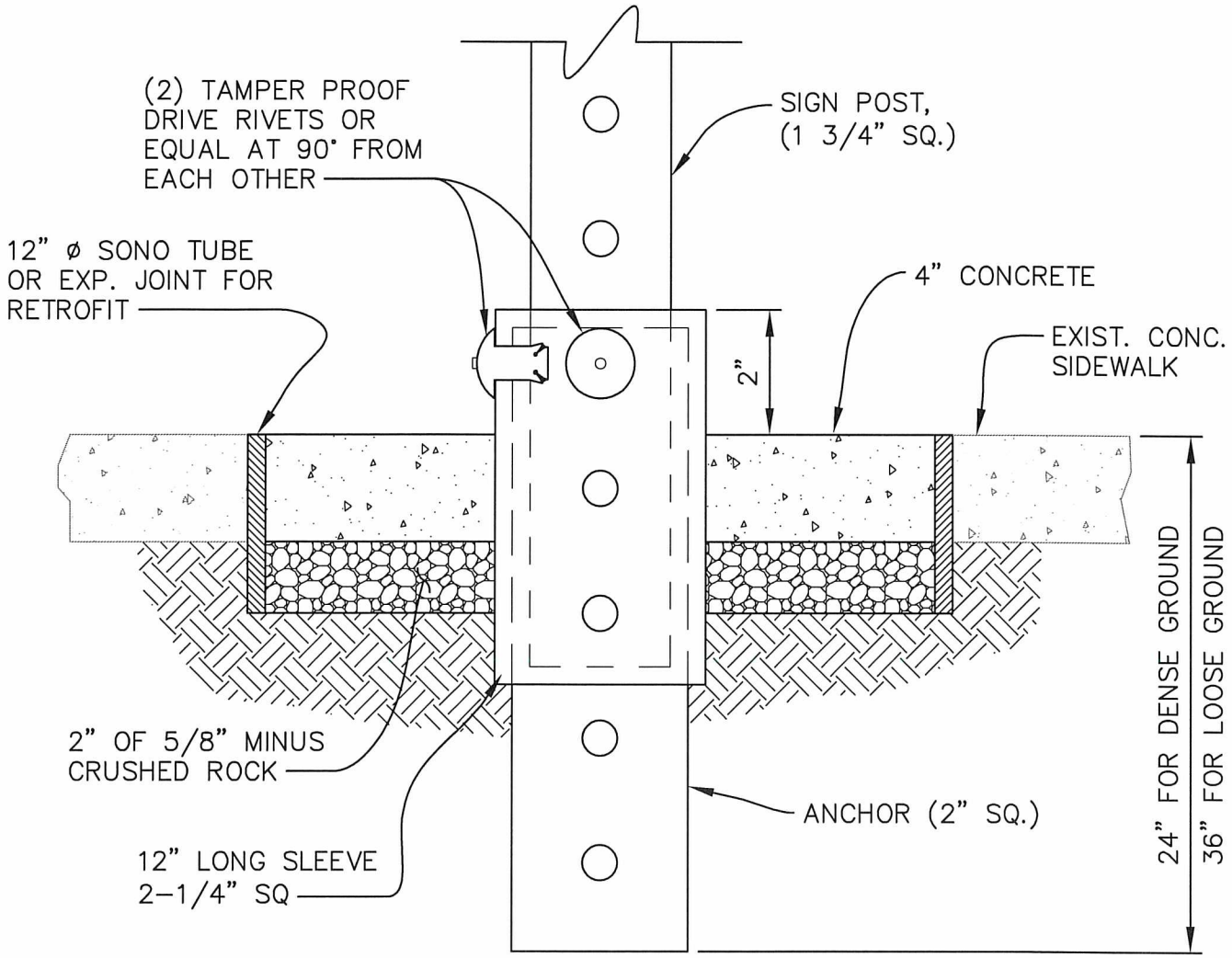

NOTES:

1. ALL TUBING MATERIAL SHALL BE "UNISTRUT TELESPAR" TYPE GALVANIZED STEEL (ASTM A570 GRADE 33) OR ENGINEER APPROVED EQUIVALENT.
2. SIDEWALKS AND PAVED AREAS SHALL BE CORE DRILLED BEFORE ATTEMPTING SIGN INSTALLATION.
3. SIGN POSTS NOT LOCATED IN THE SIDEWALK OR PAVED AREAS SHALL BE BURIED IN THE GROUND AT A MINIMUM DEPTH OF 36" WITH 8" DIA. X 12" CONCRETE BASE.
4. IF SIGNS ARE INSTALLED WHERE THE DISTANCE FROM THE OUTSIDE DIA. OF THE SONO TUBE TO THE BACK OF WALK IS LESS THAN 6", THE SIDEWALK SHALL BE REINFORCED AS DIRECTED BY THE ENGINEER.
5. SIGNS SHALL HAVE A MIN. HEIGHT OF 7 FT. FROM THE LOWER EDGE OF THE SIGN TO SIDEWALK GRADE, AND A 2 FT. LATERAL CLEARANCE FROM THE FACE OF CURB TO THE NEAR EDGE OF SIGN. SIGN LOCATION SHALL BE AS SHOWN ON PLANS AND PER MANUAL ON UNIFORM TRAFFIC CONTROL DEVICES (M.U.T.C.D).
6. WRAP ANCHOR TUBING WITH TAPE BEFORE PLACING IN CONCRETE.
7. DEMONSTRATE SIGN POST IS REMOVABLE BEFORE RIVETING.

APPROVED BY CITY ENGINEER:	DATE:	CITY OF AUBURN WASHINGTON	TYPICAL SIGN POST INSTALLATION
	8/5/2016		
COMMUNITY DEVELOPMENT & PUBLIC WORKS DEPT.			STANDARD DETAIL: T-24.1

Plotted by: Craig Dobyne on 7/13/2016 File location: M:\Construction Standard Details\Approved Drawing Files (dwg)\Traffic\STDETL-T-24.1

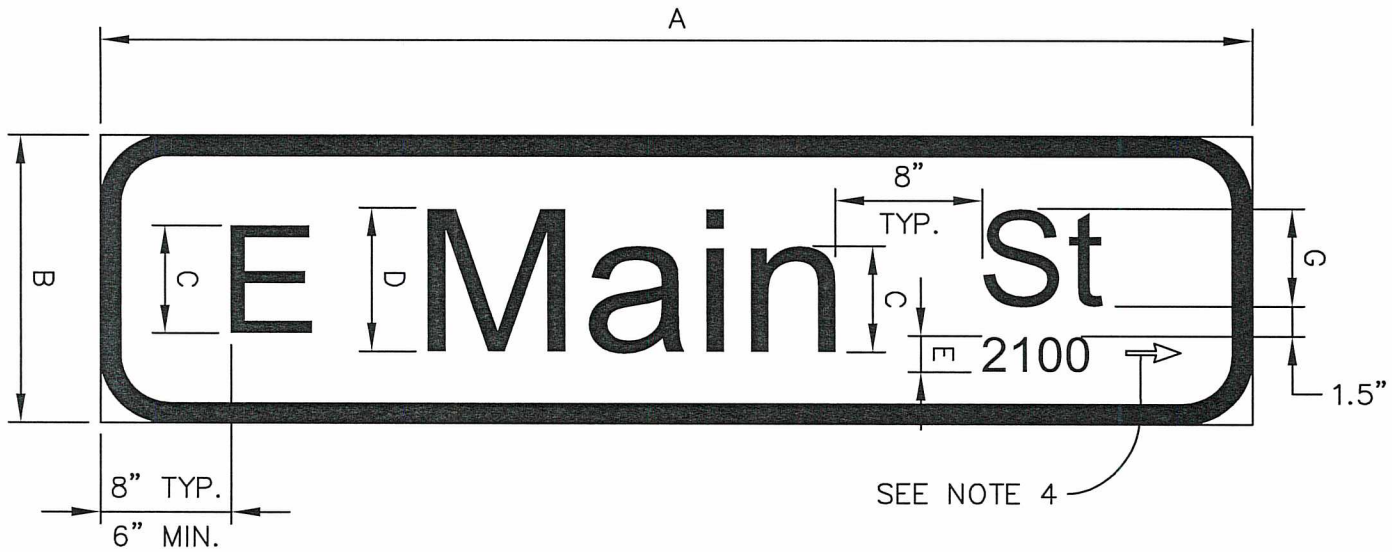

SIGN STANDARDS	
DIMENSION	INCHES
A	VARIES
B	16
C	6
D	8
E	2
F	1 1/4
G	4 1/2
R	3

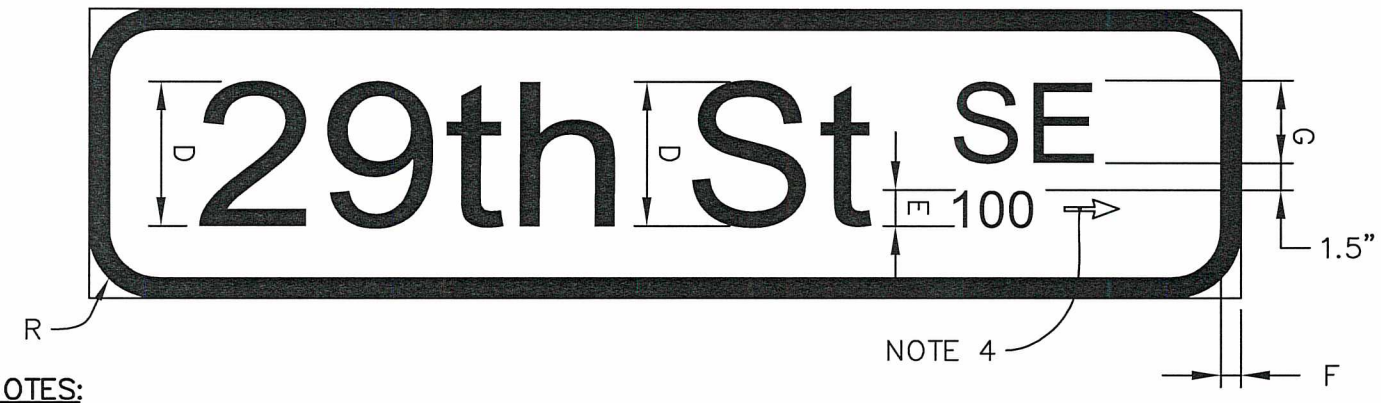

NOTES:

1. SIGN BLADES SHALL BE 0.125" THICK TEMPERED ALUMINUM ALLOY.
2. BACKGROUND FOR STREET NAME SIGNS SHALL BE GREEN COLOR, ENGINEERING GRADE REFLECTIVE SHEETING.
3. ALL LETTERING AND 1-1/4" BORDER FOR STREET NAME SIGNS SHALL BE WHITE COLOR, REFLECTIVE HIGH INTENSITY GRADE SHEETING.
4. ARROW ON THE RIGHT SIDE OF THE BLOCK NUMBER INDICATES AN INCREASING BLOCK NUMBER IN THE ARROW DIRECTION.
5. FOR GUIDANCE ON LETTERING AND NUMERAL WIDTHS AND SPACING, SEE WSDOT "SIGN FABRICATION MANUAL" APPENDIX C.
6. ENGINEER APPROVAL OF SIGN PROOF(S) REQUIRED BEFORE FABRICATION.

APPROVED BY CITY ENGINEER: [signature]

DATE: 8/5/2016

CITY OF AUBURN WASHINGTON

MAST ARM MOUNTED, STREET NAME SIGN DETAIL

COMMUNITY DEVELOPMENT & PUBLIC WORKS DEPT.

STANDARD DETAIL: T-25.1

STREET NAME STANDARD	
NAME	ABBREVIATION
AVENUE	AVE
BOULEVARD	BLVD
COURT	CT
DRIVE	DR
LANE	LN
LOOP	LP
PARKWAY	PKWY
PLACE	PL
ROAD	RD
STREET	ST
STREET SOUTHEAST	ST SE
WAY	WAY

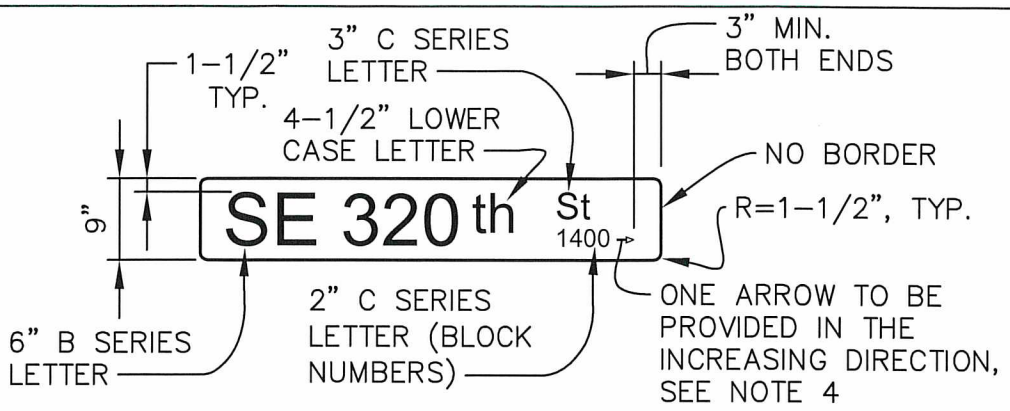

PUBLIC ROAD SIGN

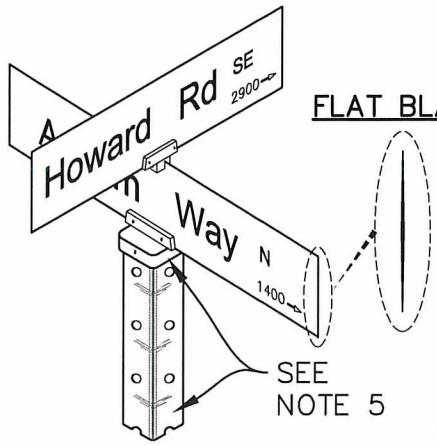

FLAT BLANK

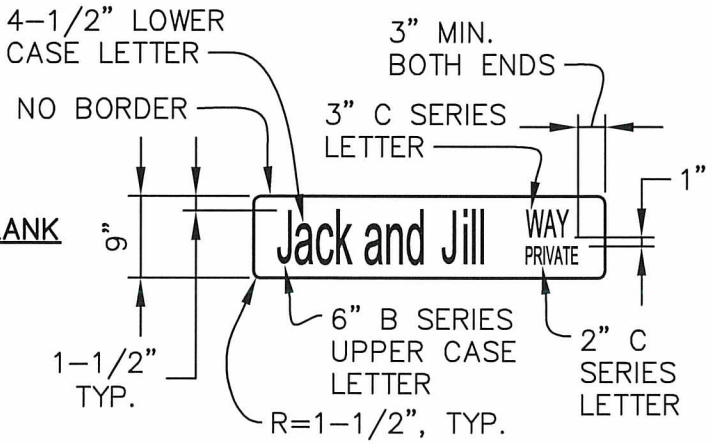

PRIVATE ROAD SIGN

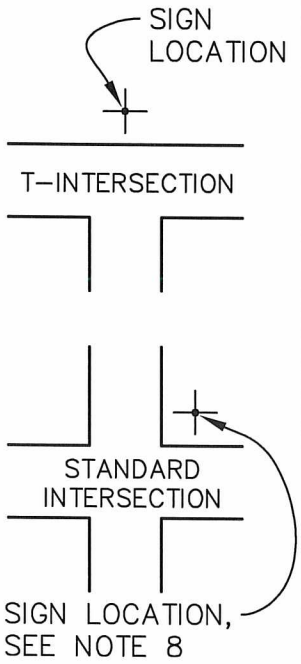

SIGN PLACEMENT

EXAMPLES:

124th Ave SE 31600

M St SE 20

W Main St 25

37th St SE 1400

Howard Rd SE 2900 — NORTH VIEW

Auburn Way N 2900 — EAST VIEW

Howard Rd SE 2900 — SOUTH VIEW

Auburn Way N 2900 — WEST VIEW

NOTES:

1. NAME PLATE SHALL BE 9" WIDE X VARIABLE LENGTH OF FLAT BLANK, 0.080 GAUGE ALUMINUM, TREATED WITH ALODINE 1200 CONVERSION COATING, ZUMAR OR APPROVED EQUIVALENT.
2. BACKGROUND FOR PUBLIC ROAD STREET NAME SIGNS SHALL BE GREEN COLOR, ENGINEERING GRADE REFLECTIVE SHEETING.
3. BACKGROUND FOR PRIVATE ROAD STREET NAME SIGNS SHALL BE BLUE COLOR, ENGINEERING GRADE REFLECTIVE SHEETING.
4. ALL LETTERING FOR STREET NAME SIGNS SHALL BE WHITE COLOR, REFLECTIVE HIGH INTENSITY GRADE SHEETING.
5. POST INSTALLATION SHALL CONFORM TO REQUIREMENTS SET BY STANDARD DETAIL T-24.
6. HARDWARE SHALL BE ZUMAR STYLE 850 LONG OR APPROVED EQUIVALENT.
7. MOUNTING HEIGHT SHALL BE 8'-0".
8. WHEN AN INTERSECTION IS STOP SIGN CONTROLLED, THE STREET NAME SIGN SHALL BE PLACED ON THE SAME POST AND ABOVE THE STOP SIGN.
9. ENGINEER APPROVAL OF SIGN PROOF(S) SHALL BE REQUIRED BEFORE FABRICATION.

PRIVATE TRACT SIGNS:

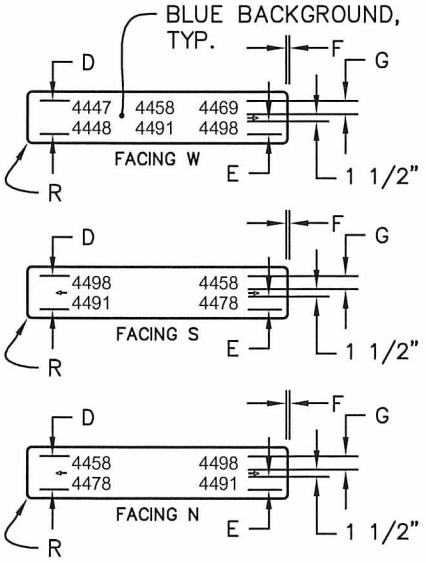

PRIVATE TRACT SIGN STANDARDS	
DIMENSION	INCHES
A	VARIES
B	16
C	6
D	8
E	2
F	1 1/4
G	4 1/2
R	3

APPROVED BY CITY ENGINEER: DATE: 8/5/2016

CITY OF AUBURN WASHINGTON

POST MOUNTED, STREET NAME SIGN DETAIL

COMMUNITY DEVELOPMENT & PUBLIC WORKS DEPT. STANDARD DETAIL: T-26.1

Plotted by: Craig Dobyns on 7/25/2016 File location: M:\Construction Standard Details\Approved Drawing Files (dwg)\Traffic\STDETL-T-26.1

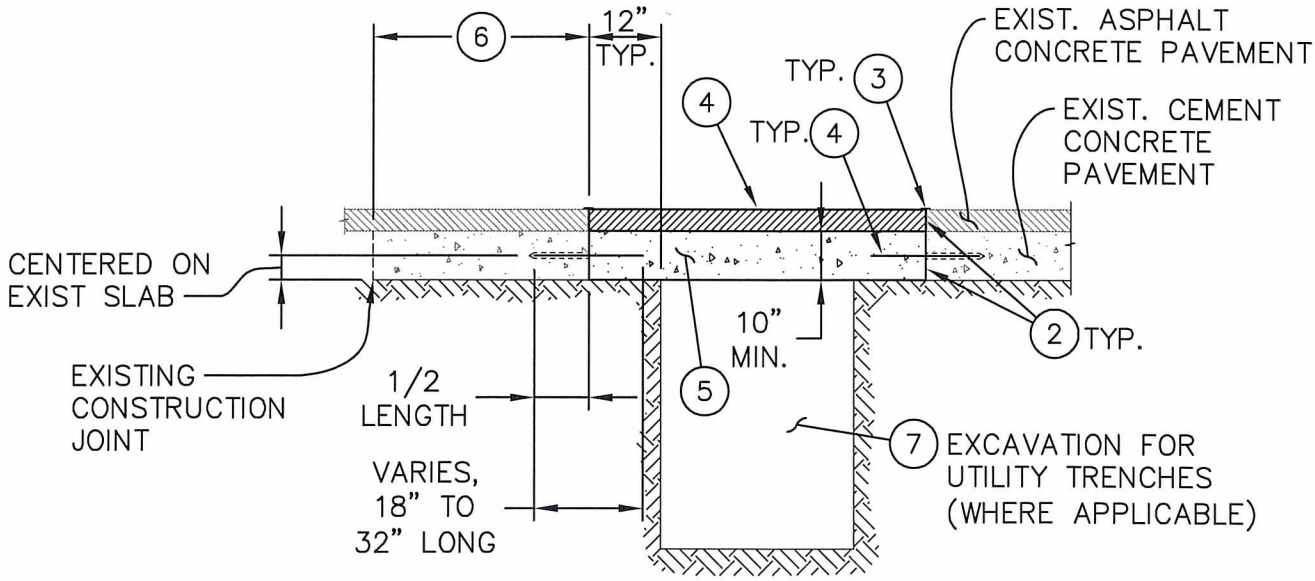

NOTES:

1. FOR TRANSVERSE JOINTS CONSTRUCTION, THE DOWEL BARS SHALL BE 1 1/2" DIA. x 18" LONG AND INSTALLED AT 12" ON CENTER. FOR LONGITUDINAL JOINTS CONSTRUCTION, TIE BARS SHALL BE #5 x 32" LONG AND INSTALLED AT 36" ON CENTER. DRILL HOLES TO EXISTING ADJACENT CONCRETE PANELS AND PARALLEL TO EXISTING GRADE. HOLES SHALL BE BLOWN CLEAN WITH COMPRESSED AIR PRIOR TO APPLYING EPOXY RESIN INTO THE HOLES. THEN INSERT EPOXY RESIN COATED BARS IN THE HOLES SUCH THAT THE BACK OF THE HOLES ARE FILLED FIRST.
2. APPLY HOT POURED ELASTIC TYPE SEALANT TO ENTIRE EDGE AND FULL DEPTH OF THE JOINTS BEFORE PAVING.
3. APPLY SURFACE SEAL WITH ASPHALT CEMENT AR-4000 AT MATCHLINES.
4. WHERE REPLACEMENT OF EXISTING ASPHALT CONCRETE PAVEMENT IS REQUIRED, APPLY NEW HMA CL. 1/2" TO MATCH EXISTING THICKNESS.
5. MATCH THICKNESS OF EXISTING CEMENT CONCRETE PAVEMENT, BUT IN NO CASE SHALL IT BE LESS THAN 10". CEMENT CONCRETE SHALL BE CL. 4000 WITH 5% AIR ENTRAINMENT. TRAFFIC SHALL BE KEPT OFF NEW PAVEMENT FOR 7 DAYS OR UNTIL DESIGN STRENGTH IS ACHIEVED, WHICHEVER COMES FIRST.
6. WHENEVER A REMAINING CONCRETE PANEL IS 3' WIDE OR LESS IN ANY DIRECTION FROM EXISTING CONSTRUCTION JOINT TO NEW CONSTRUCTION JOINT, IT SHALL BE REMOVED AND REPLACED AS PART OF THE NEW PANEL.
7. BEDDING/BACKFILL SHALL BE PER STANDARD DETAIL T-01.

APPROVED BY CITY ENGINEER:	DATE:	CITY OF AUBURN WASHINGTON	REPAIR OF EXISTING CEMENT CONCRETE PANEL IN ROADWAY
	8/5/2016		
COMMUNITY DEVELOPMENT & PUBLIC WORKS DEPT.			STANDARD DETAIL: T-27.1

Plotted by: Craig Dobyns on 7/13/2016 File location: M:\Construction Standard Details\Approved Drawing Files (dwg)\Traffic\STDETL-T-27.1

ORIENTATION LOCATIONS:

- LUMINAIRES SHALL BE MOUNTED AT 90° AND 270°
- BANNER SUPPORT ARMS SHALL BE MOUNTED AT 0°
- FLOWER BASKET SUPPORT ARMS SHALL BE MOUNTED AT 90° & 270°
- RECEPTACLES SHALL BE MOUNTED AT 180°
- HANDHOLES SHALL BE MOUNTED AT 90°
- STREET NAME SIGNS SHALL BE MOUNTED AT 0° & 90°
- STOP SIGN SHALL BE MOUNTED AT 270°

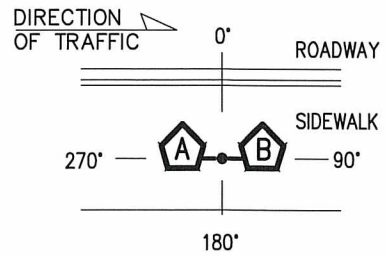

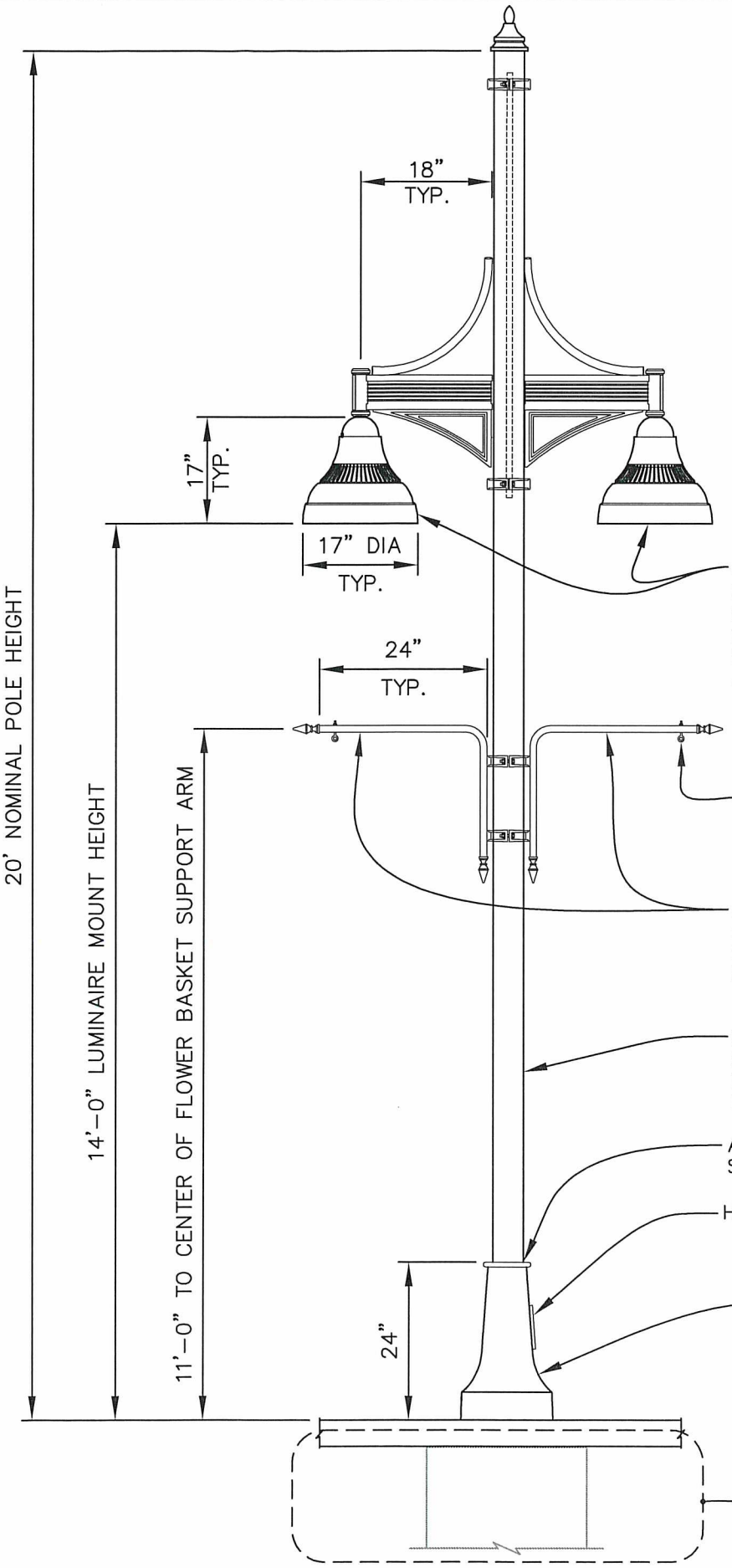

(2) 17" DIA. ERA BELL, 5200K LED ROTATABLE OPTICAL SYSTEM W/ LABEL TO SHOW ORIENTATION OF LIGHT PATTERN, FLAT LENS LUMINAIRE BY KIM LIGHTING OR APPROVED EQ.

(2) 3/8" EYE BOLTS

(2) BP1-5-24-A-P/D1 CLAMP STYLE FLOWER BASKET 100 LB. SUPPORT ARMS BY CYCLONE LIGHTING OR APPROVED EQ.

KRS20-5120 5" SMOOTH ROUND STRAIGHT STEEL 11 GA. POLE BY KIM LIGHTING OR APPROVED EQ.

APPLY BLACK SILICONE SEALANT AT INSTALLATION

HANDHOLE, MOUNTED 90°

HBC1-5 DECORATIVE ALUMINUM CLAMSHELL BASE COVER BY KIM LIGHTING OR APPROVED EQ.

FOR FOUNDATION INSTALLATION, SEE SEE STD. DETAIL T-28B

APPROVED BY CITY ENGINEER:	DATE: 9/12/2016	CITY OF AUBURN WASHINGTON	DOWNTOWN PEDESTRIAN POLE MOUNT LIGHTING STANDARD
COMMUNITY DEVELOPMENT & PUBLIC WORKS DEPT.			STANDARD DETAIL: T-28.1

Plotted by: Laszlo Csuha on 8/23/2016 File location: M:\Construction Standard Details\Approved Drawing Files (dwg)\Traffic\STDETL-T-28B.1

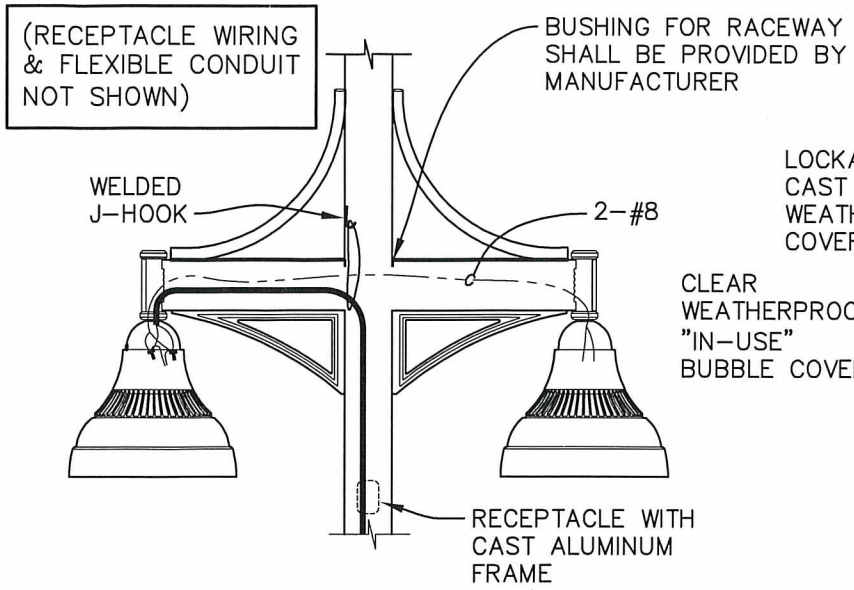

LUMINAIRE WIRING DETAIL

NTS

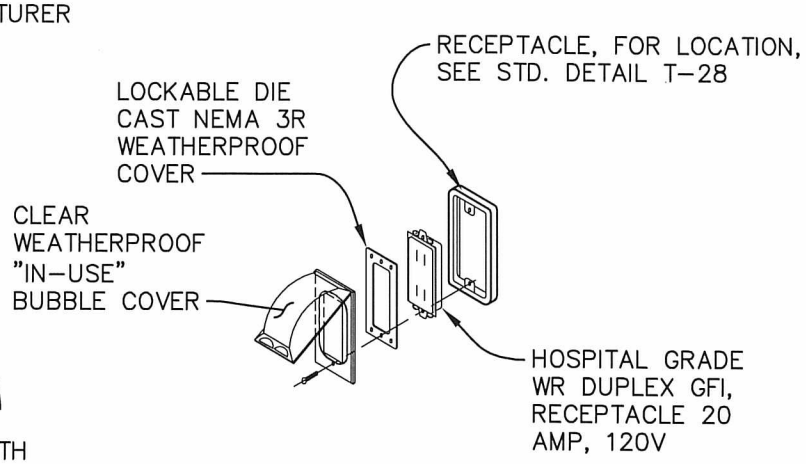

POLE RECEPTACLE

NTS

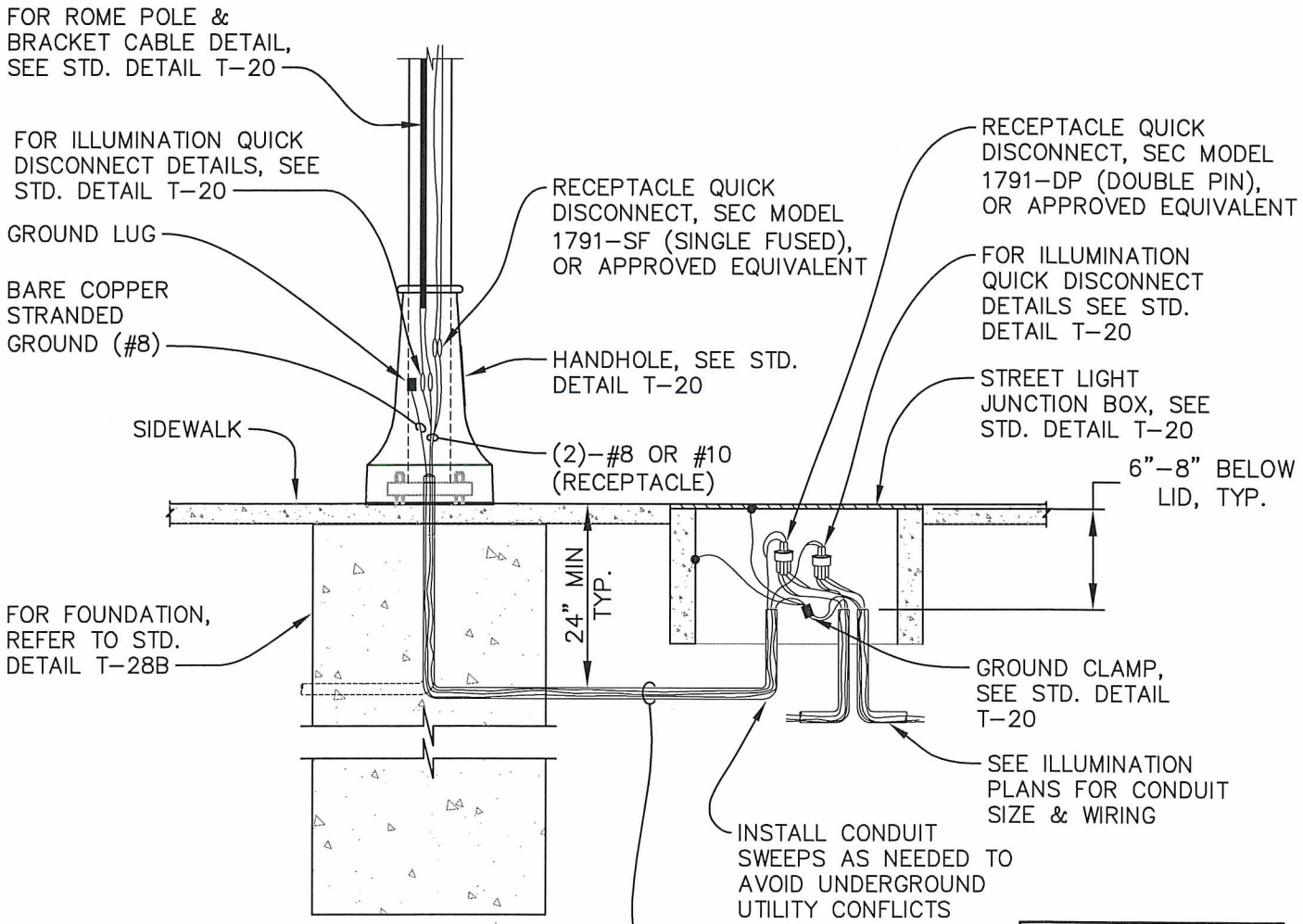

TYPICAL LUMINAIRE / JUNCTION BOX WIRING DETAIL

NTS

* REFER TO STD. DETAIL T-20 FOR INFORMATION NOT SHOWN
* SPARE/EMPTY CONDUITS SHALL CONTAIN DETECTABLE PULL TAPE

APPROVED BY CITY ENGINEER:	DATE: 9/12/2016	CITY OF AUBURN WASHINGTON	DOWNTOWN PEDESTRIAN POLE MOUNT LIGHTING STANDARD
COMMUNITY DEVELOPMENT & PUBLIC WORKS DEPT.			STANDARD DETAIL: T-28A.1

Plotted by: Laszlo Csuha on 8/23/2016 File location: M:\Construction Standard Details\Approved Drawing Files (dwg)\Traffic\STDETL-T-28A.1

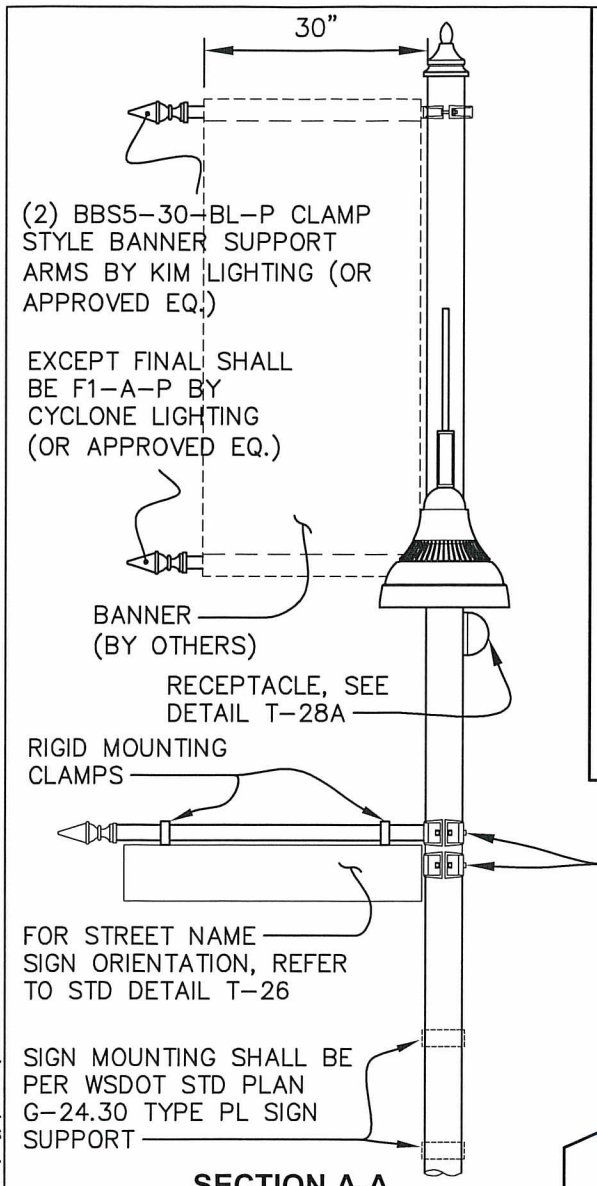

SECTION A-A

NTS

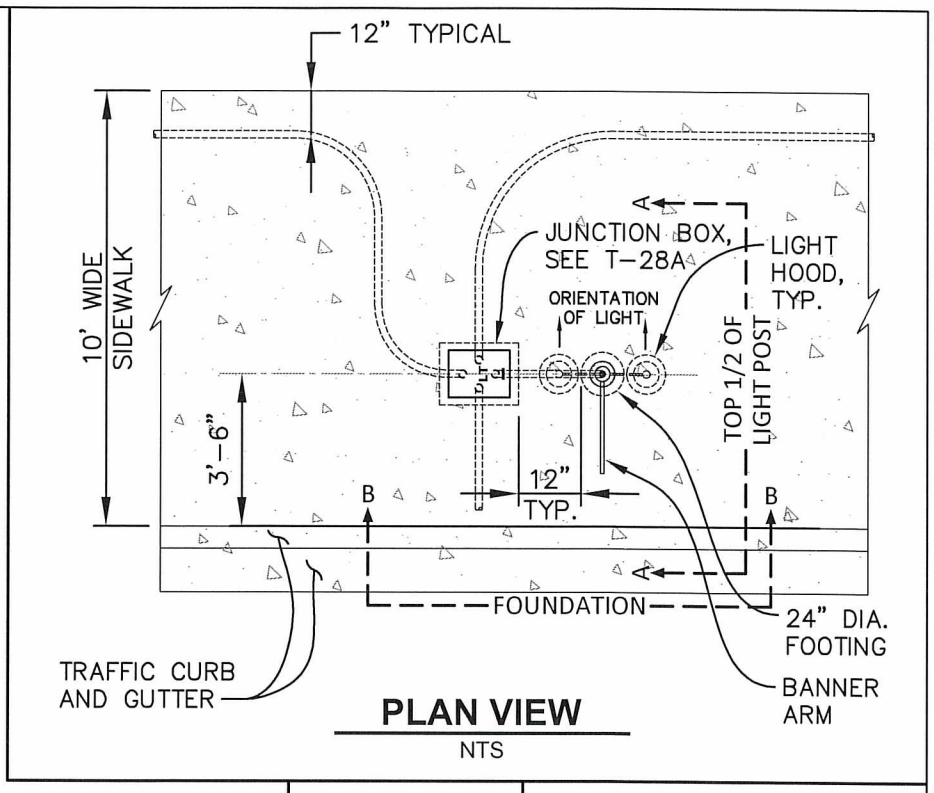

PLAN VIEW

NTS

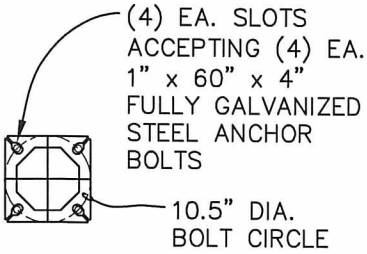

BASE PLATE

NTS

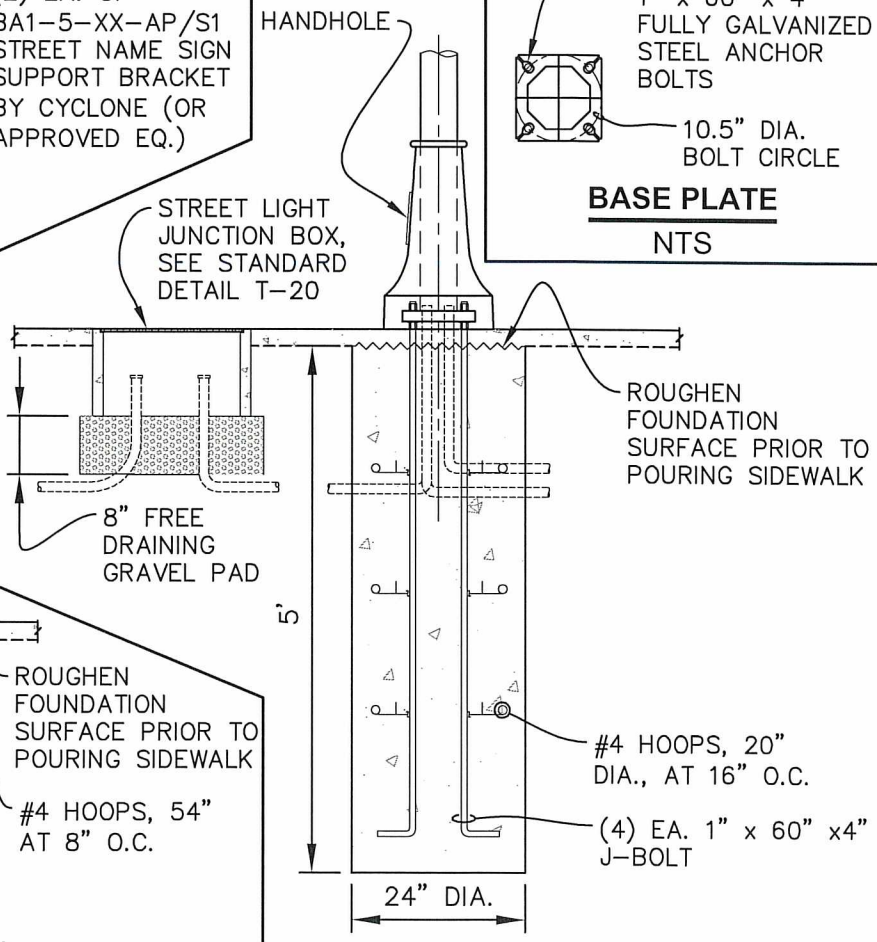

SECTION B-B

NTS

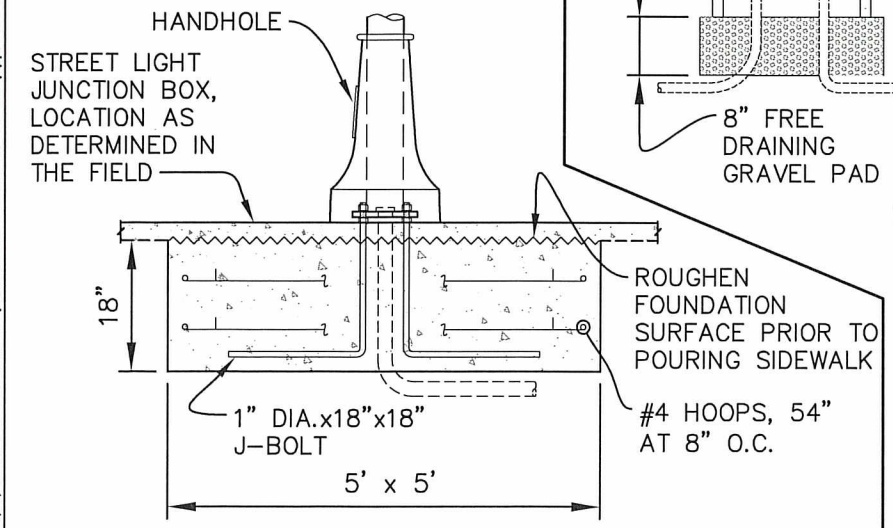

ALTERNATE BASE (SPREAD FOOTING)

NTS

APPROVED BY CITY ENGINEER:	DATE: 9/12/2016	CITY OF AUBURN WASHINGTON	DOWNTOWN PEDESTRIAN POLE MOUNT LIGHTING STANDARD
COMMUNITY DEVELOPMENT & PUBLIC WORKS DEPT.			STANDARD DETAIL: T-28B.1

Plotted by: Laszlo Csuha on 9/9/2016 File location: M:\Construction Standard Details\Approved Drawing Files (dwg)\Traffic\STDETL-T-28B.1

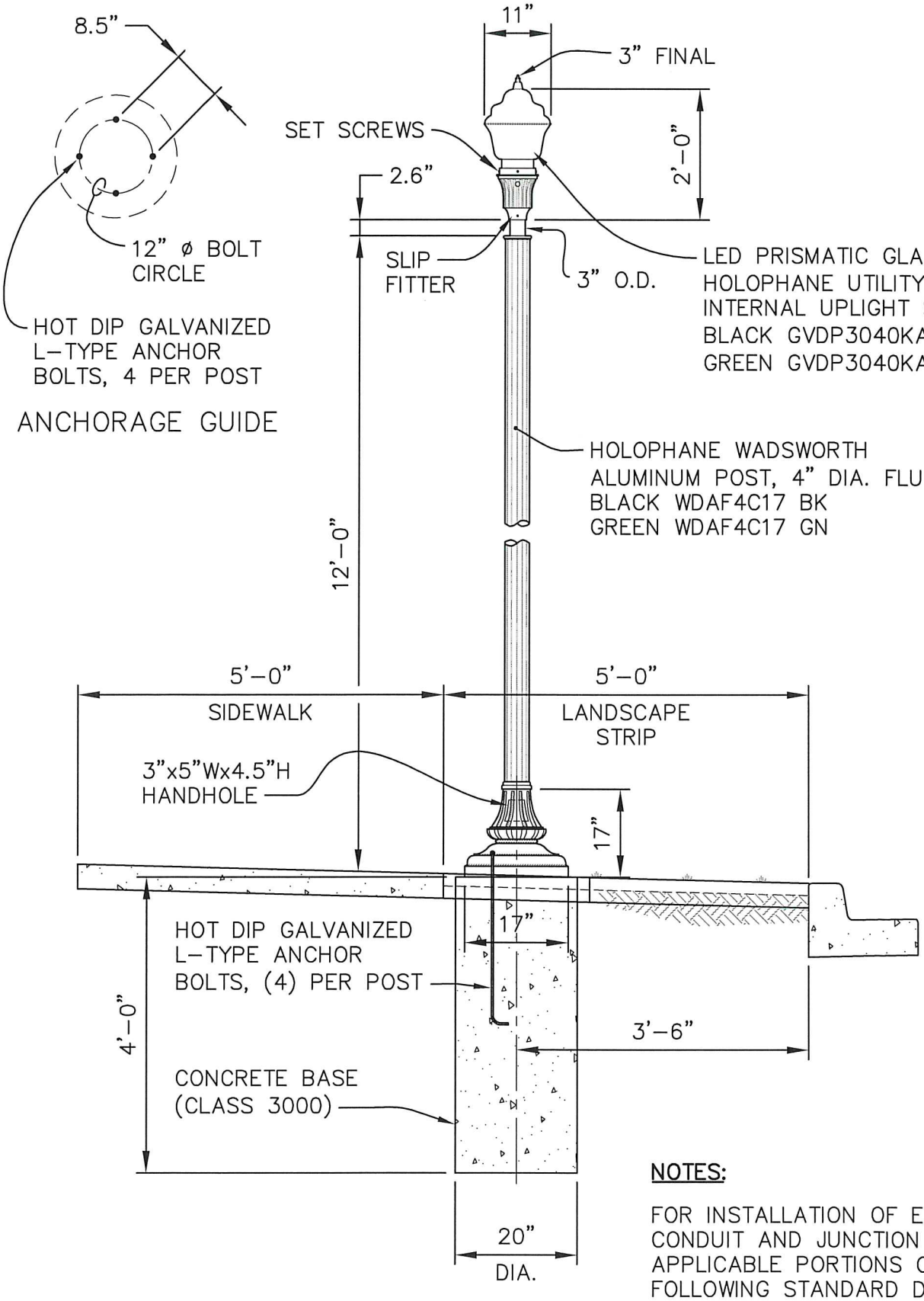

NOTES:

FOR INSTALLATION OF ELECTRICAL CONDUIT AND JUNCTION BOX, SEE APPLICABLE PORTIONS OF THE FOLLOWING STANDARD DETAILS:

T-18 (LUMINAIRE & CONDUIT LAYOUT)

T-20 (LUMINAIRE WIRING)

T-23 (ELECTRICAL TRENCH)

APPROVED BY CITY ENGINEER:	DATE:	CITY OF AUBURN WASHINGTON	LOCAL RESIDENTIAL ORNAMENTAL STREET LIGHTING STANDARD
COMMUNITY DEVELOPMENT & PUBLIC WORKS DEPT.			STANDARD DETAIL: T-29.1

Plotted by: Craig Dobyns on 7/13/2016 File location: M:\Construction Standard Details\Approved Drawing Files (dwg)\Traffic\STDETL-T-29.1

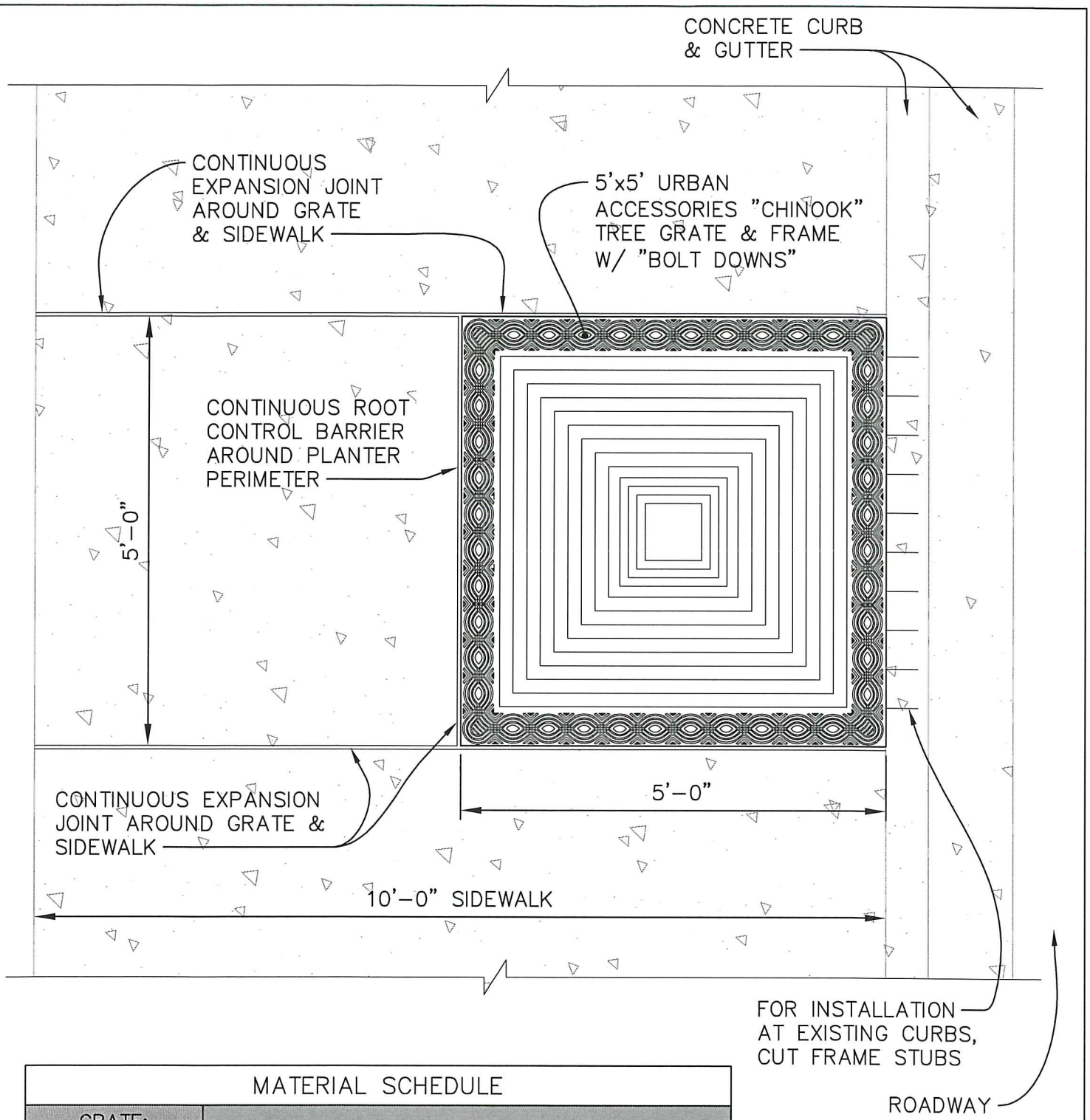

MATERIAL SCHEDULE	
GRATE:	
MATERIAL	GREY IRON ASTM A48 CLASS 358 OR BETTER
FINISH	NATURAL PATINA OF RAW IRON
FRAME:	
MATERIAL	MILD STEEL ASTM A36
FINISH	NATURAL PATINA OF RAW STEEL
LOAD RATING: PEDESTRIAN	

NOTE:
4' WIDE x 6' LONG TREE GRATES SHALL BE USED WHERE SIDEWALK WIDTH IS LESS THAN 10'.

APPROVED BY CITY ENGINEER: DATE: 8/5/2016

CITY OF AUBURN WASHINGTON

TYPICAL PLAN FOR TREE GRATE

COMMUNITY DEVELOPMENT & PUBLIC WORKS DEPT. STANDARD DETAIL: T-30.1

Plotted by: Craig Dobyns on 7/25/2018 File location: M:\Construction Standard Details\Approved Drawing Files (dwg)\Traffic\STDETL-T-30.1

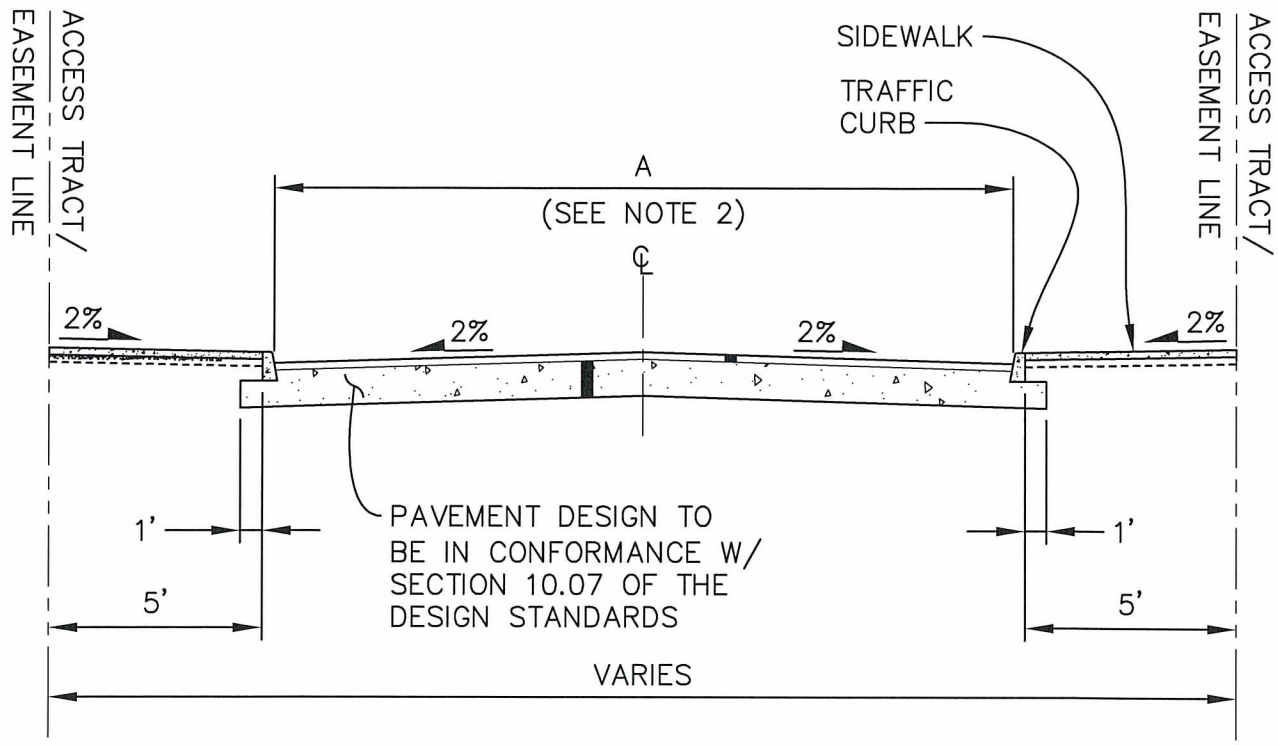

CROSS SECTION
PRIVATE ACCESS ROAD
(SHARED DRIVEWAY)
(Not to Scale)

NOTES:

1. CURB AND GUTTER PER WSDOT STANDARD PLAN F-10.12 (CEMENT CONCRETE TRAFFIC CURB).
2. ROADWAY WIDTH CURB TO CURB:

   A = 34' – PARKING ALLOWED

   A = 24' – DESIGNATED FIRE LANE (PER ACC 15.36A) & ACCESS ROAD LENGTH 75' OR GREATER.

   A = 20' – DESIGNATED FIRE LANE (PER ACC 15.36A) & ACCESS ROAD LENGTH LESS THAN 75'.

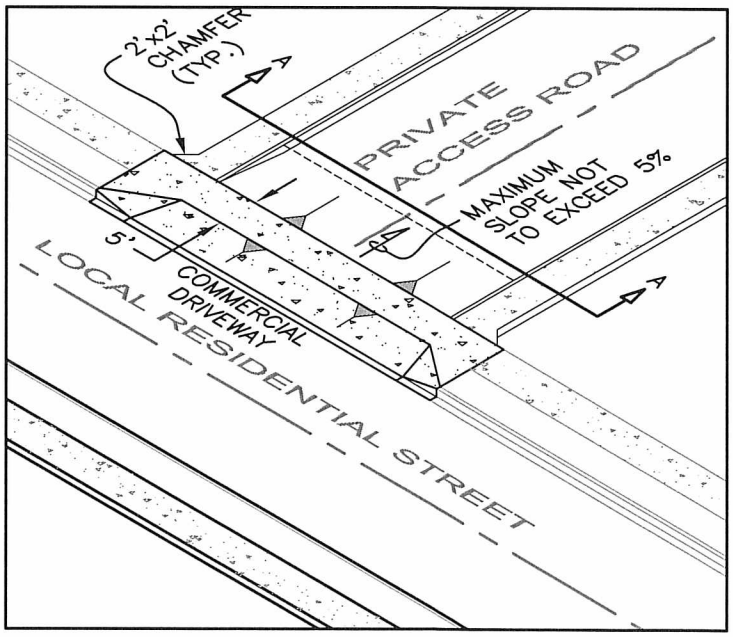

ISOMETRIC VIEW
PRIVATE ACCESS ROAD
(Not to Scale)

APPROVED BY CITY ENGINEER:	DATE: 8/5/2016	CITY OF AUBURN WASHINGTON	PRIVATE ACCESS ROAD / SHARED DRIVEWAY
COMMUNITY DEVELOPMENT & PUBLIC WORKS DEPT.			STANDARD DETAIL: T-31.1

Plotted by: Craig Dobyns on 7/13/2016 File location: M:\Construction Standard Details\Approved Drawing Files (dwg)\Traffic\STDETL-T-31.1

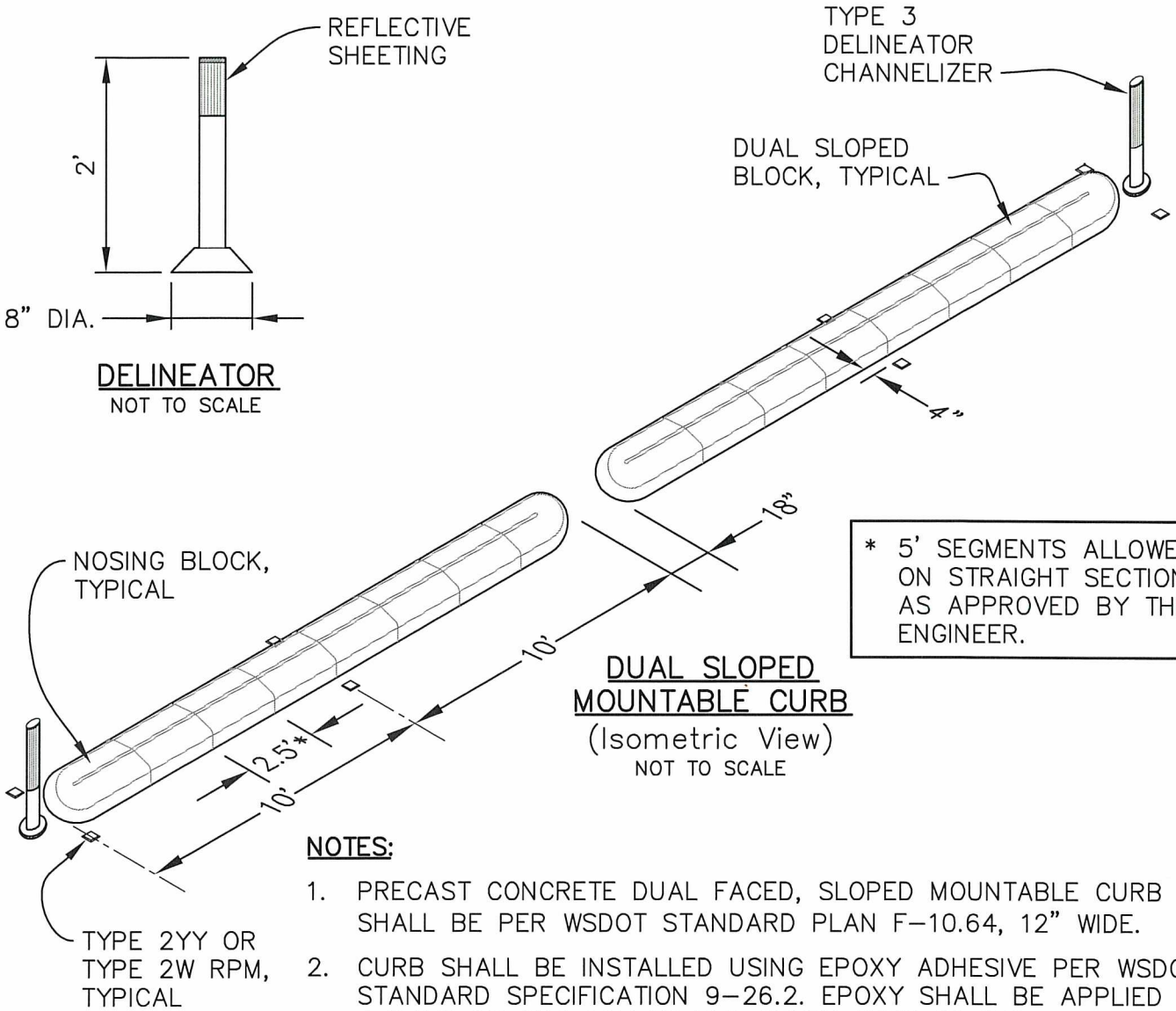

DELINEATOR
NOT TO SCALE

DUAL SLOPED MOUNTABLE CURB
(Isometric View)
NOT TO SCALE

* 5' SEGMENTS ALLOWED ON STRAIGHT SECTIONS AS APPROVED BY THE ENGINEER.

NOTES:

1. PRECAST CONCRETE DUAL FACED, SLOPED MOUNTABLE CURB SHALL BE PER WSDOT STANDARD PLAN F-10.64, 12" WIDE.
2. CURB SHALL BE INSTALLED USING EPOXY ADHESIVE PER WSDOT STANDARD SPECIFICATION 9-26.2. EPOXY SHALL BE APPLIED AT A RATE OF ONE GALLON PER SEVEN FEET OF CURBING.
3. CURB SHALL BE INSTALLED IN 20' SEGMENTS, WITH 18" OPENING BETWEEN ENDS, OR MODIFIED TO FIT FIELD DIMENSIONS AS APPROVED BY THE ENGINEER. IT SHALL BE THE SAME COLOR AS THE CHANNELIZATION STRIPE.
4. DELINEATORS SHALL BE TYPE 3 CHANNELIZER, POST AND REFLECTIVE SHEETING SHALL BE SAME COLOR AS CHANNELIZATION STRIPE.
5. DELINEATOR BASE SHALL BE AFFIXED TO PAVEMENT WITH FLEXIBLE BITUMINOUS PAVEMENT MARKER ADHESIVE PER WSDOT STANDARD SPECIFICATION 9-02.1(8).
6. RPM'S SHALL BE PLACED AT EACH APPROACH END OF THE CURBING AND CENTERED ON EACH SECTION AS SHOWN. THEY SHALL BE THE SAME COLOR AS THE CHANNELIZATION STRIPE.
7. THIS DETAIL IS USED TO RETRO-FIT EXISTING STREETS. NEW CONSTRUCTION SHALL REQUIRE CAST-IN-PLACE CURBS.

APPROVED BY CITY ENGINEER:	DATE: 9/8/2016	CITY OF AUBURN WASHINGTON	PRECAST CONCRETE DUAL FACED SLOPED MOUNTABLE CURB RETROFIT
COMMUNITY DEVELOPMENT & PUBLIC WORKS DEPT.			STANDARD DETAIL: T-32.1

Plotted by: Craig Dobyns on 8/9/2016 File location: M:\Construction Standard Details\Approved Drawing Files (dwg)\Traffic\STDETL-T-32.1

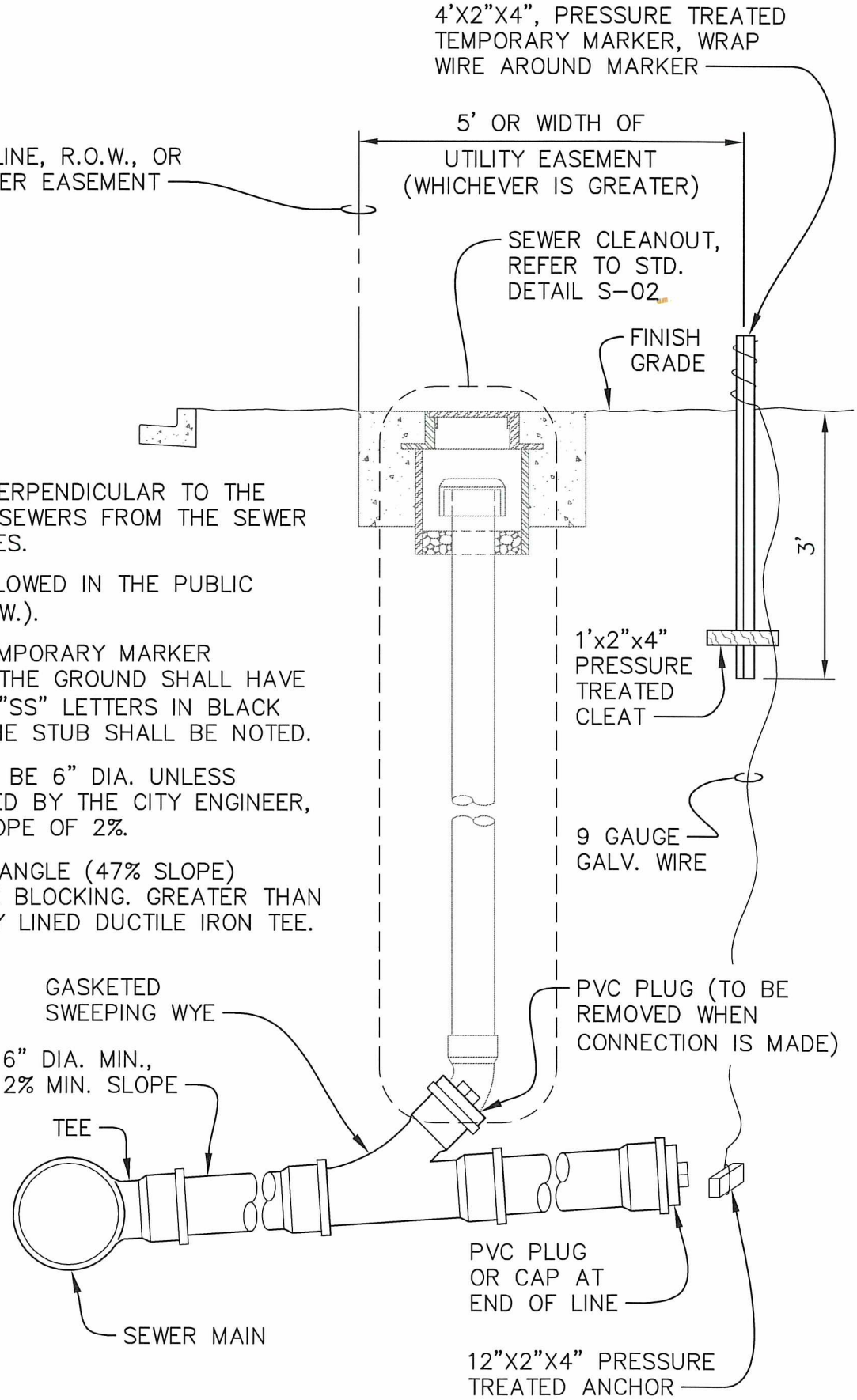

NOTES:

1. LAY SIDE SEWERS PERPENDICULAR TO THE MAIN. EXTEND SIDE SEWERS FROM THE SEWER MAIN ONLY WITH TEES.
2. BENDS ARE NOT ALLOWED IN THE PUBLIC RIGHT OF WAY (R.O.W.).
3. PORTION OF THE TEMPORARY MARKER EXTENDING OUT OF THE GROUND SHALL HAVE 2" HIGH STENCILED "SS" LETTERS IN BLACK PAINT, DEPTH TO THE STUB SHALL BE NOTED.
4. SIDE SEWERS SHALL BE 6" DIA. UNLESS OTHERWISE APPROVED BY THE CITY ENGINEER, WITH A MINIMUM SLOPE OF 2%.
5. GREATER THAN 25° ANGLE (47% SLOPE) REQUIRES CONCRETE BLOCKING. GREATER THAN 45° REQUIRES EPOXY LINED DUCTILE IRON TEE.

APPROVED BY CITY ENGINEER:	DATE: 8/5/2016	CITY OF AUBURN WASHINGTON	SIDE SEWER STUB
COMMUNITY DEVELOPMENT & PUBLIC WORKS DEPT.			STANDARD DETAIL: S-01.1

Plotted by: Craig Dobyns on 7/13/2016 File location: M:\Construction Standard Details\Approved Drawing Files (dwg)\Sewer and Storm\STDETL-S-01.1

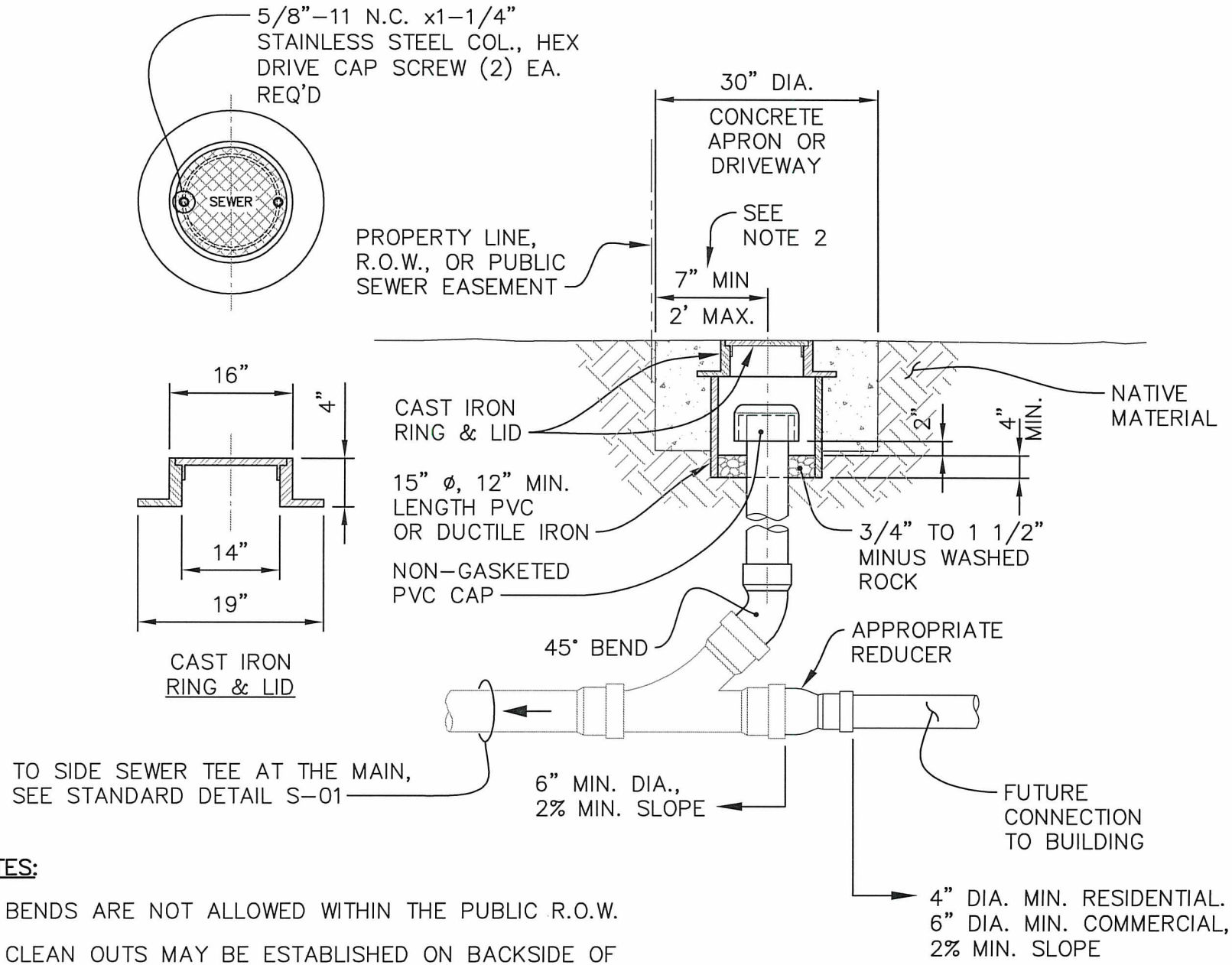

NOTES:

1. BENDS ARE NOT ALLOWED WITHIN THE PUBLIC R.O.W.
2. CLEAN OUTS MAY BE ESTABLISHED ON BACKSIDE OF UTILITY EASEMENTS. SIMILAR TO PROPERTY LINE IF APPROVED BY CITY ENGINEER.
3. ADDITIONAL CLEAN OUTS ARE REQUIRED ON SIDE SEWER LINE WITHIN PRIVATE PROPERTY WHEN CUMULATIVE BENDS ON SIDE SEWER LINE EQUALS OR EXCEEDS 135°

APPROVED BY CITY ENGINEER:

DATE: 8/5/2016

CITY OF AUBURN WASHINGTON

PRIVATE SANITARY SIDE SEWER CLEAN OUT

COMMUNITY DEVELOPMENT & PUBLIC WORKS DEPT.

STANDARD DETAIL: S-02.1

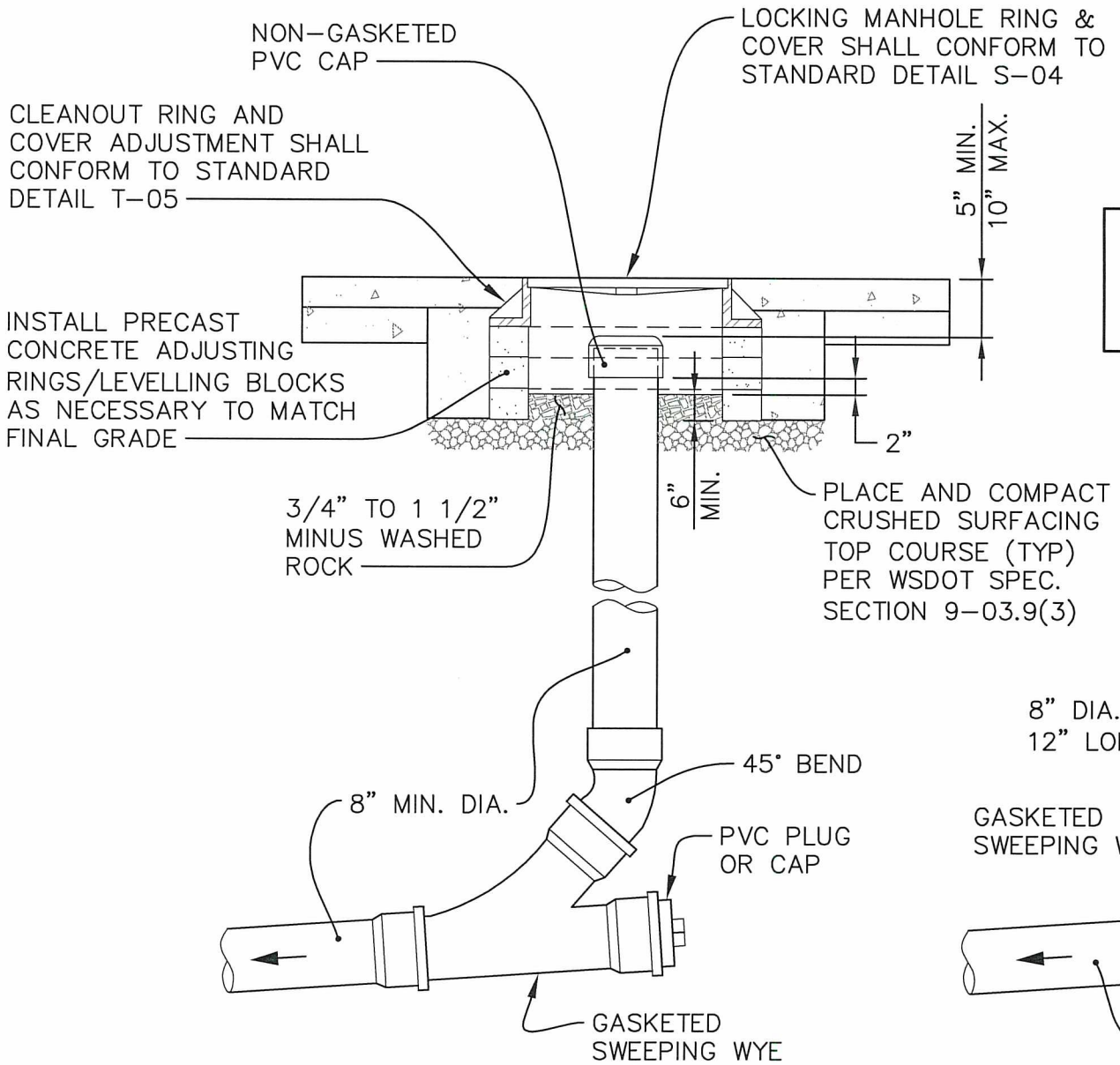

STANDARD INSTALLATION

NTS

NOTE:
MANHOLES ARE REQUIRED AT UPSTREAM END OF ALL SEWER MAINS.

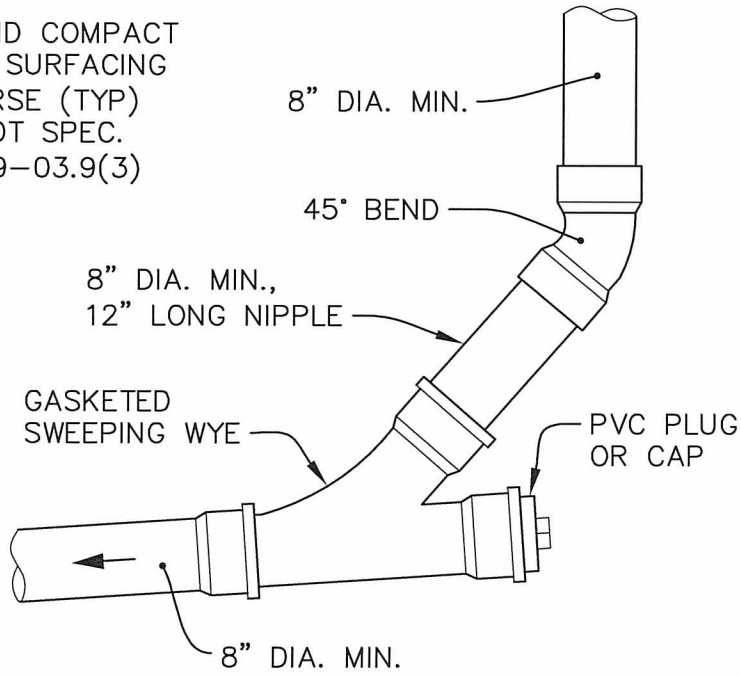

ALTERNATE INSTALLATION

NTS

APPROVED BY CITY ENGINEER:

DATE: 8/5/2016

CITY OF AUBURN WASHINGTON

PUBLIC SIDE SEWER CLEANOUT (8" OR LARGER)

COMMUNITY DEVELOPMENT & PUBLIC WORKS DEPT.

STANDARD DETAIL: S-03.1

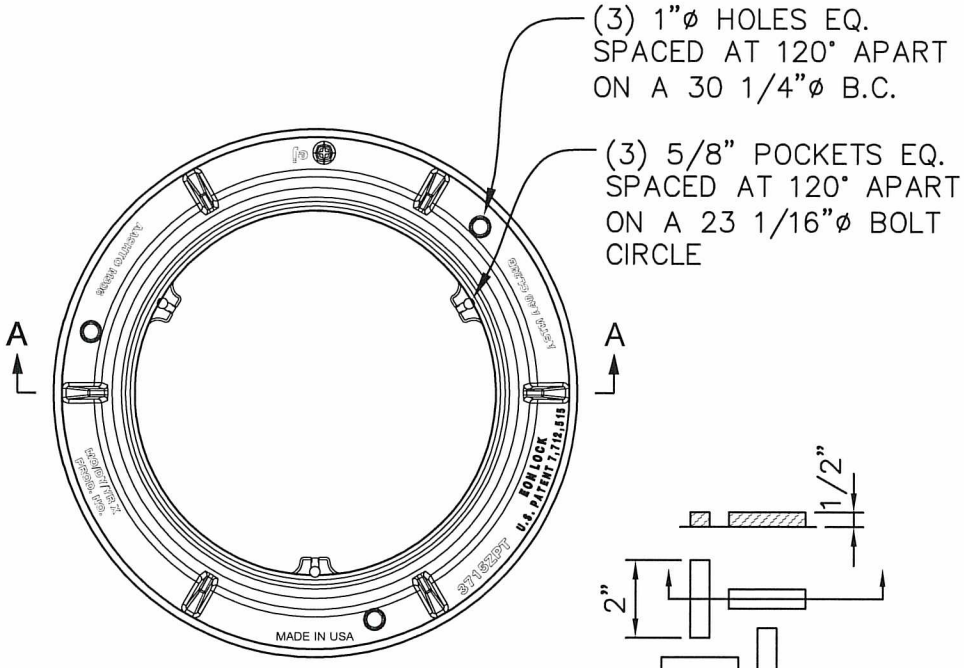

FRAME - PLAN
NTS

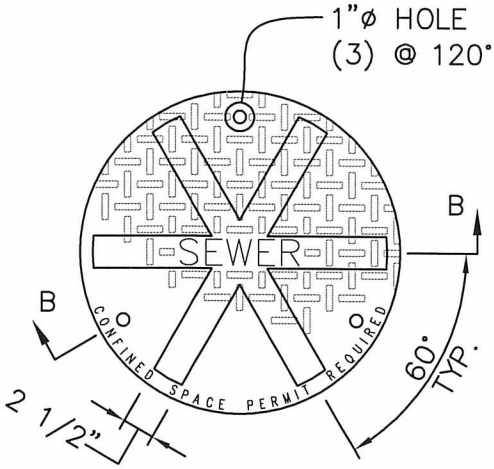

COVER - PLAN
NTS

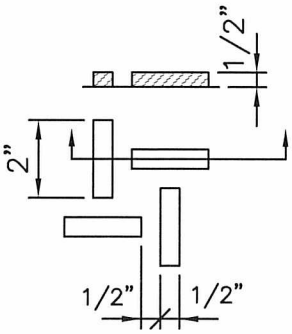

NONSKID PATTERN

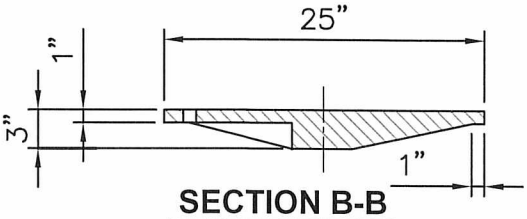

SECTION B-B
NTS

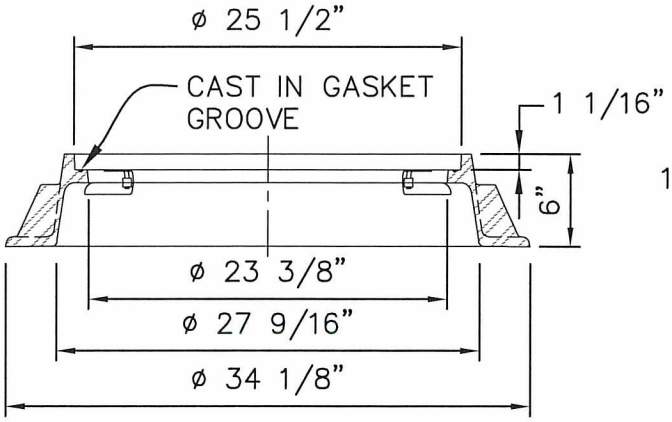

SECTION A-A
NTS

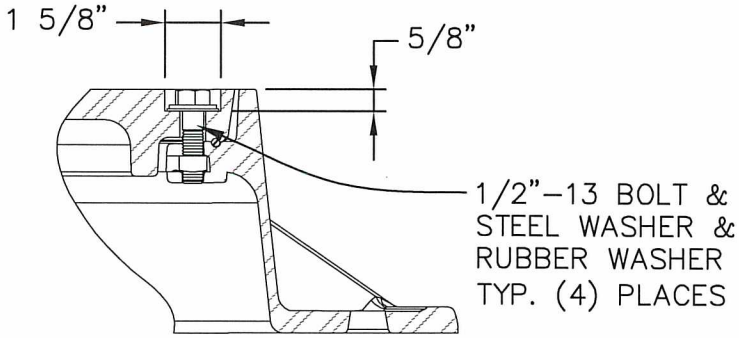

BOLT DETAIL
NTS

NOTES:

1. COVERS SHALL HAVE THEIR USE CAST IN 2" RAISED LETTERS: 'SEWER' FOR SANITARY SEWERS, 'DRAIN' FOR STORM SEWERS AND 'WATER' FOR WATER CONVEYANCE. THE WORDS 'CONFINED SPACE PERMIT REQUIRED' SHALL BE CAST IN 1" LETTERS AS SHOWN.
2. GRAY OR DUCTILE IRON FRAME AND DUCTILE IRON COVER WITH MINIMUM WEIGHTS AS FOLLOWS:

   FRAME = 210 LBS.

   COVER = 150 LBS.
3. PROVIDE SLIP RESISTANT COATING IN PAVED AREAS.

APPROVED BY CITY ENGINEER:	DATE:	CITY OF AUBURN WASHINGTON	24" DIA. MANHOLE FRAME AND COVER
	8/5/2016		
COMMUNITY DEVELOPMENT & PUBLIC WORKS DEPT.			STANDARD DETAIL: S-04.1

Plotted by: Craig Dobyns on 7/13/2016 File location: M:\Construction Standard Details\Approved Drawing Files (dwg)\Sewer and Storm\STDETL-S-04.1

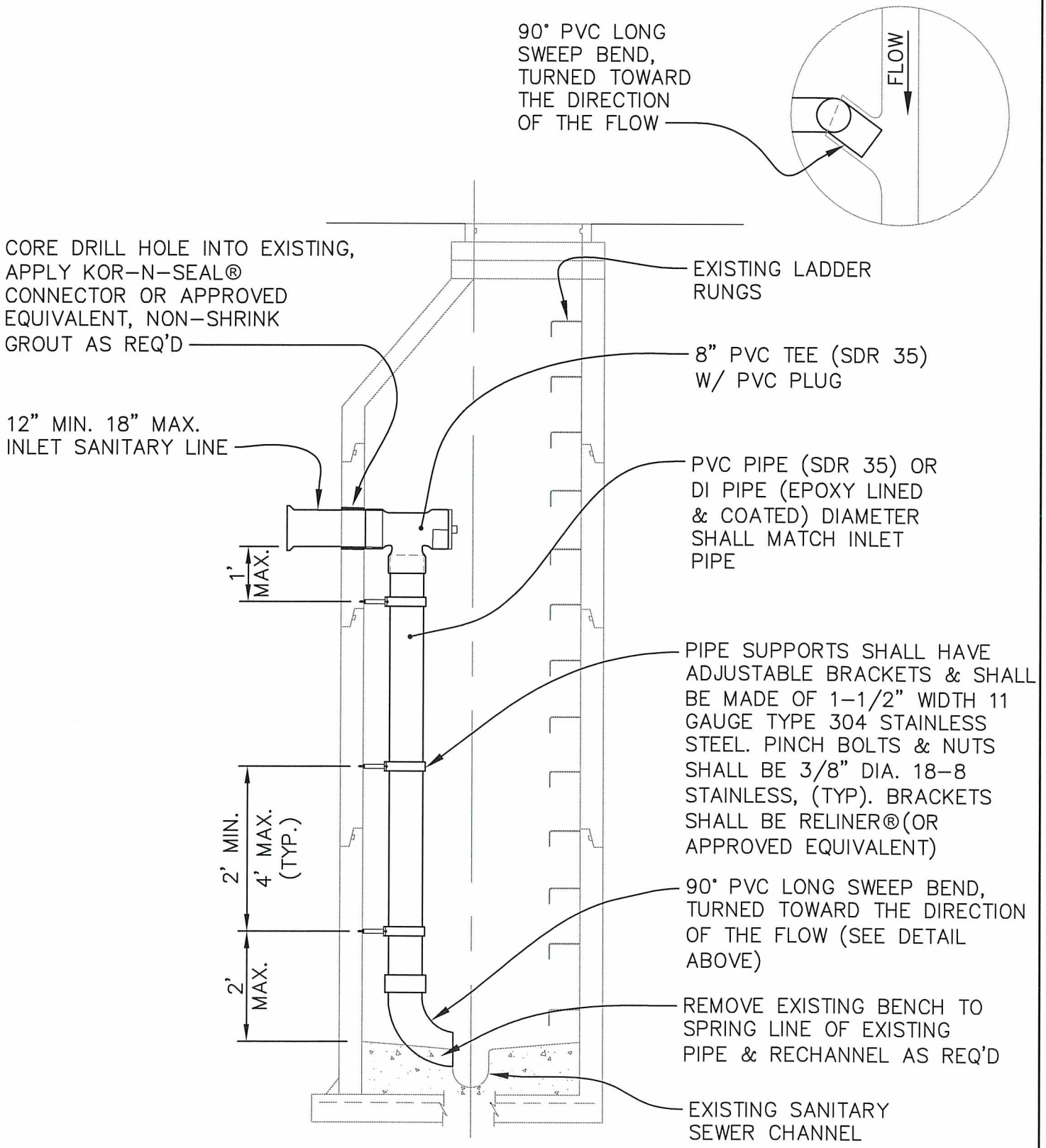

NOTES:

1. TYPE 1 MANHOLE SHOWN FOR ILLUSTRATIVE PURPOSES ONLY. DETAIL MAY ALSO BE APPLIED TO TYPE 2 & 3 MANHOLES.
2. DROP CONNECTIONS TO EXISTING 48" OR LARGER MANHOLES ONLY WITH ENGINEER APPROVAL.

APPROVED BY CITY ENGINEER:	DATE:	CITY OF AUBURN WASHINGTON	RETROFIT EXISTING MANHOLE WITH INSIDE DROP
COMMUNITY DEVELOPMENT & PUBLIC WORKS DEPT.			STANDARD DETAIL: S-05.1

Plotted by: Craig Dobyne on 7/13/2016 File location: M:\Construction Standard Details\Approved Drawing Files (dwg)\Sewer and Storm\STDETL-S-05.1

NOTE:
CITY ENGINEER APPROVAL IS REQUIRED BEFORE USING THIS DETAIL

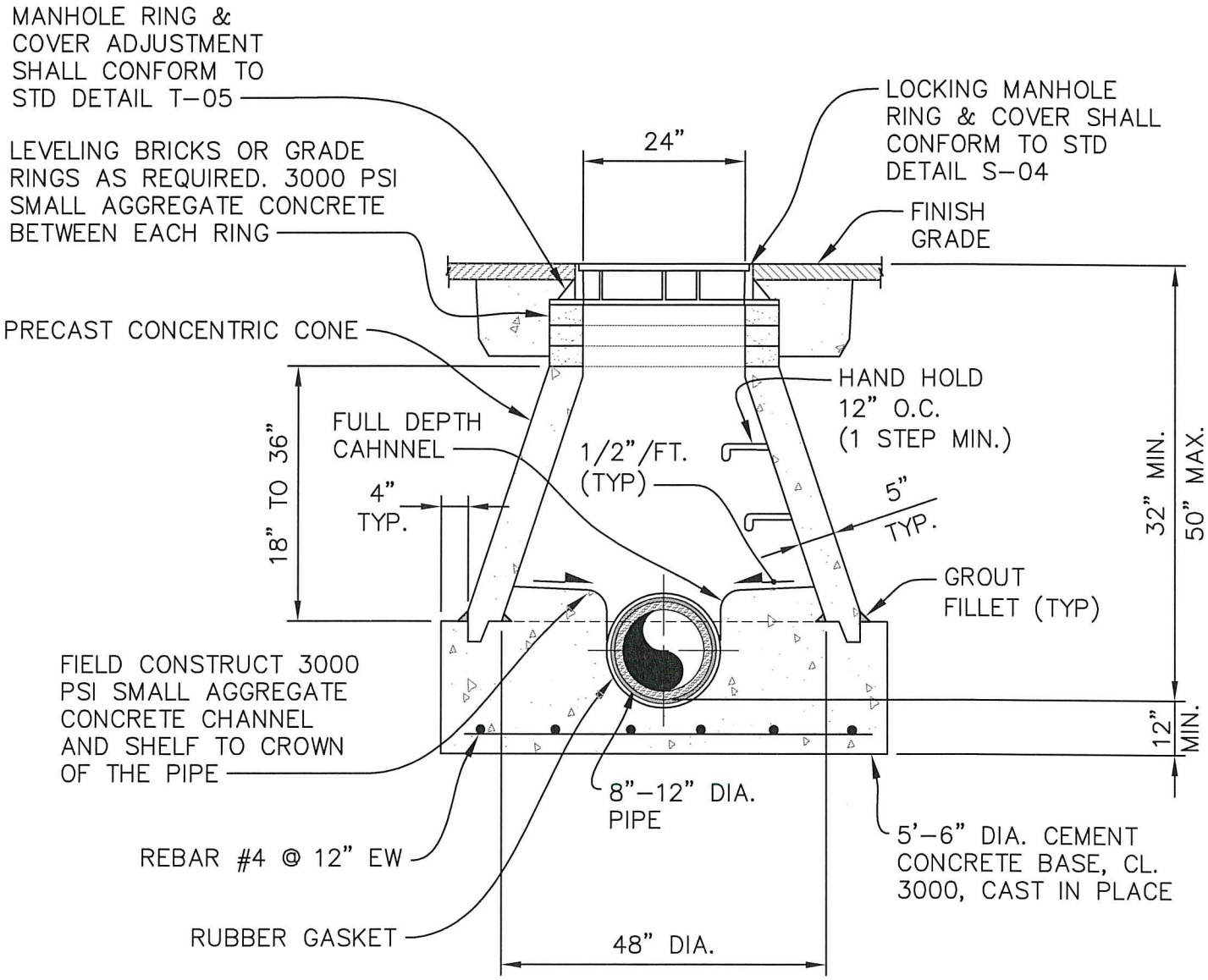

ALTERNATE:
MANUFACTURED BASE WITH FLAT TOP, FRAME AND COVER IS ACCEPTABLE

APPROVED BY CITY ENGINEER:	DATE:	CITY OF AUBURN WASHINGTON	EXTRA SHALLOW MANHOLE DETAIL
	8/5/2016		
COMMUNITY DEVELOPMENT & PUBLIC WORKS DEPT.			STANDARD DETAIL: S-06.1

Plotted by: Craig Dobyns on 7/13/2016 File location: M:\Construction Standard Details\Approved Drawing Files (dwg)\Sewer and Storm\STDETL-S-06.1

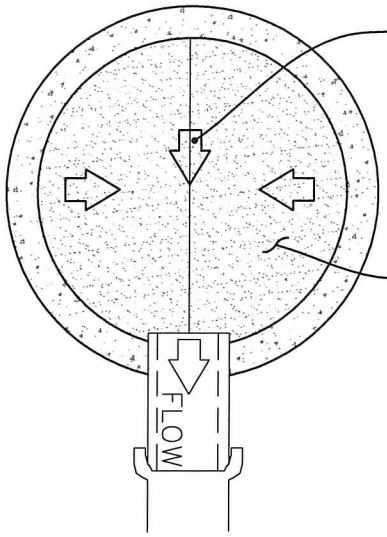

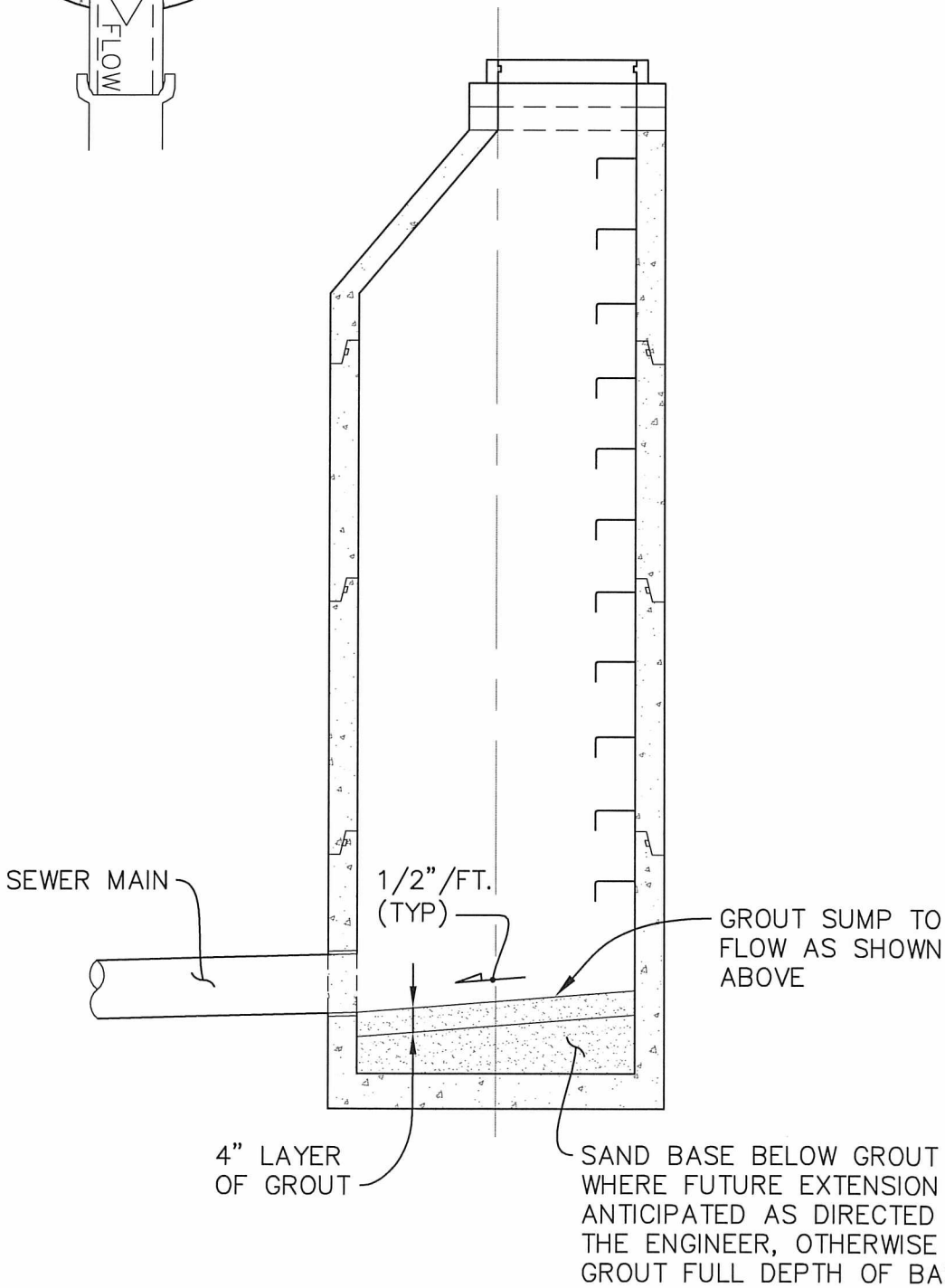

APPROVED BY CITY ENGINEER:	DATE: 8/5/2016	CITY OF AUBURN WASHINGTON	MANHOLE AT END OF SANITARY SEWER LINE
COMMUNITY DEVELOPMENT & PUBLIC WORKS DEPT.			STANDARD DETAIL: S-07.1

Plotted by: Craig Dobyns on 7/13/2016 File location: M:\Construction Standard Details\Approved Drawing Files (dwg)\Sewer and Storm\STDETL-S-07.1

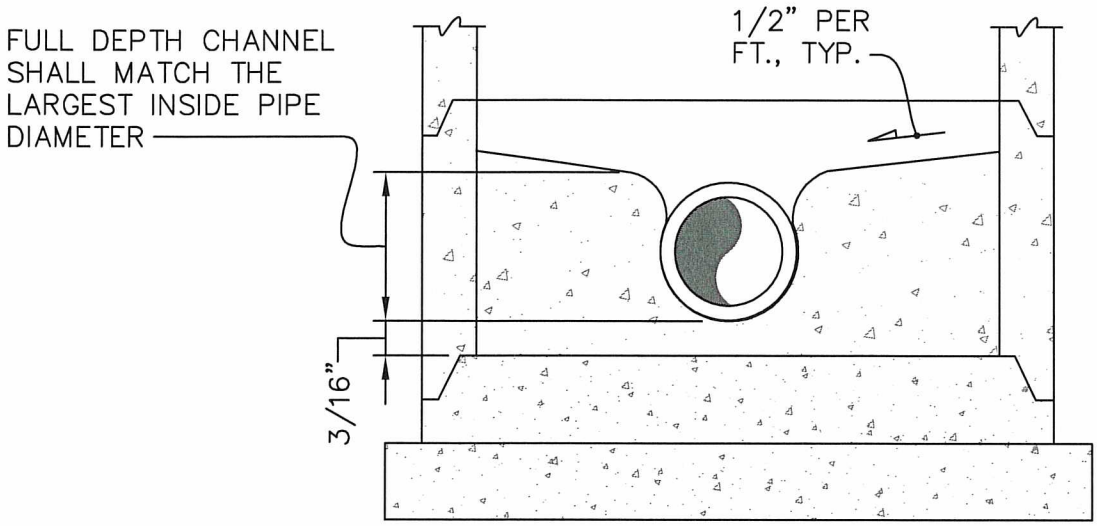

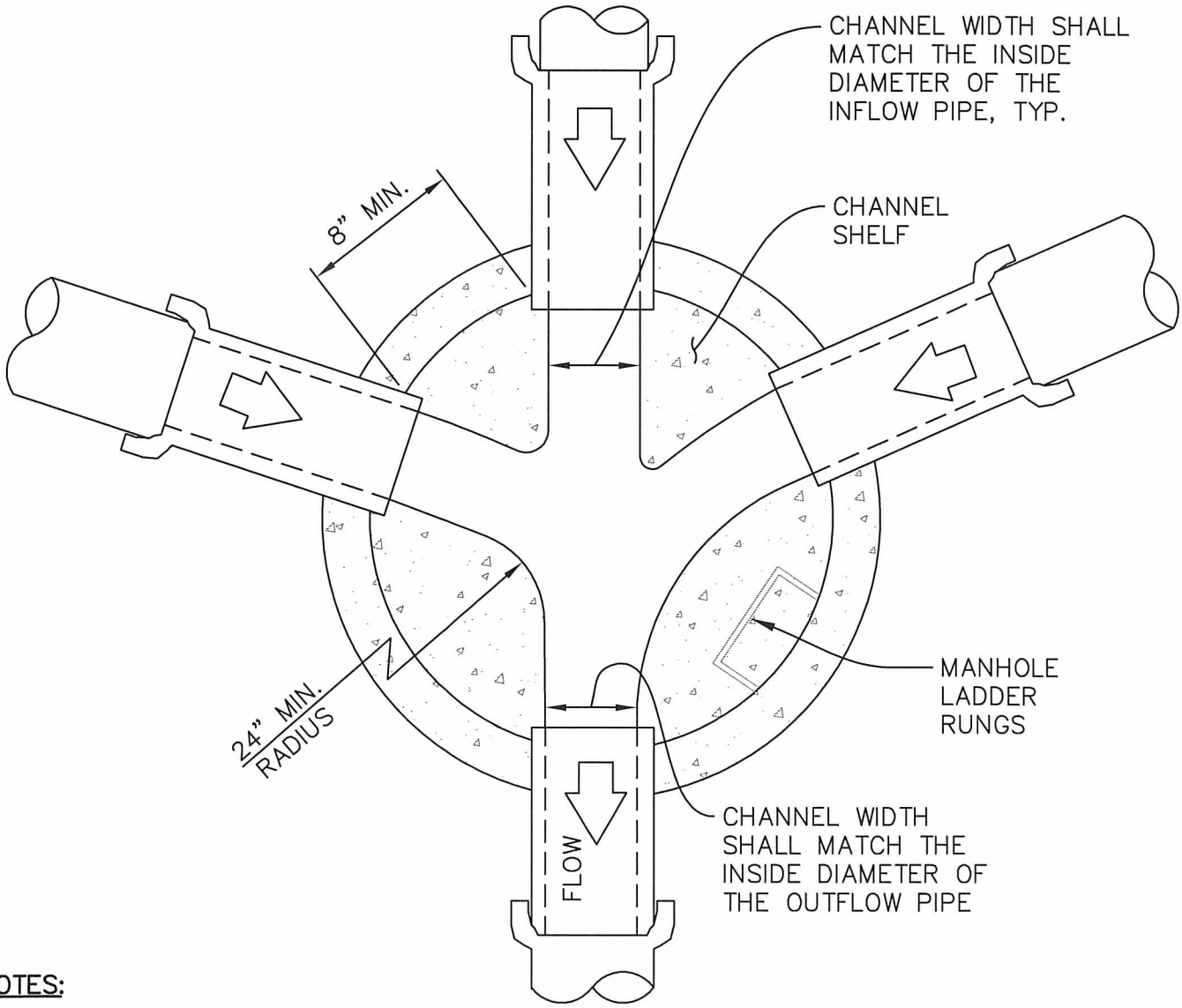

NOTES:

1. NO STEPS OVER PIPES OR MANHOLE CHANNELS. WHEN POSSIBLE, STEPS SHALL BE POSITIONED OVER THE LARGEST BENCH AREA.
2. FAST SETTING CONCRETE SHALL NOT BE USED.

APPROVED BY CITY ENGINEER:	DATE:	CITY OF AUBURN WASHINGTON	MANHOLE CHANNEL CONSTRUCTION
	8/5/2016		
COMMUNITY DEVELOPMENT & PUBLIC WORKS DEPT.			STANDARD DETAIL: S-08.1

Plotted by: Craig Dobyne on 7/13/2016 File location: M:\Construction Standard Details\Approved Drawing Files (dwg)\Sewer and Storm\STDETL-S-08.1

NOTE:
THIS DETAIL IS FOR STORM USE ONLY

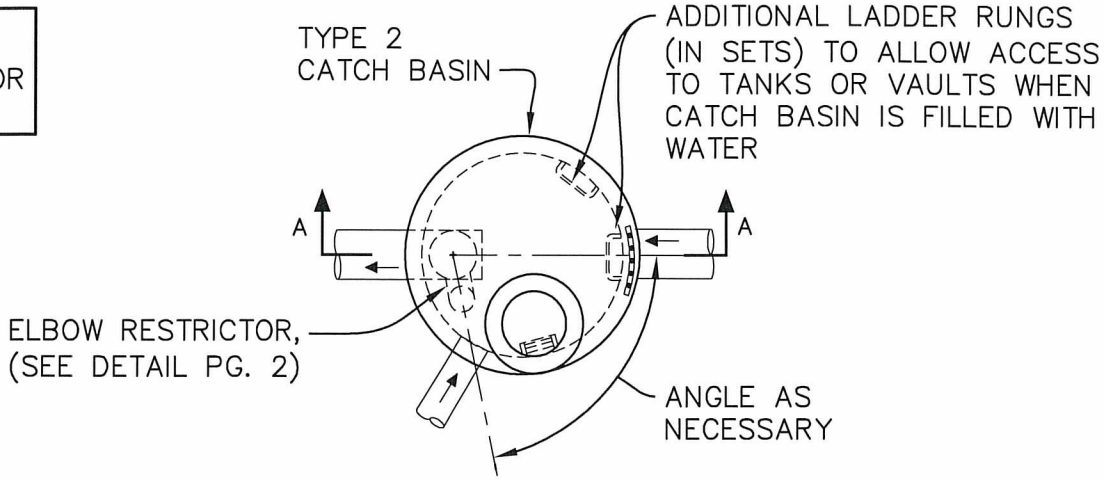

PLAN VIEW
NTS

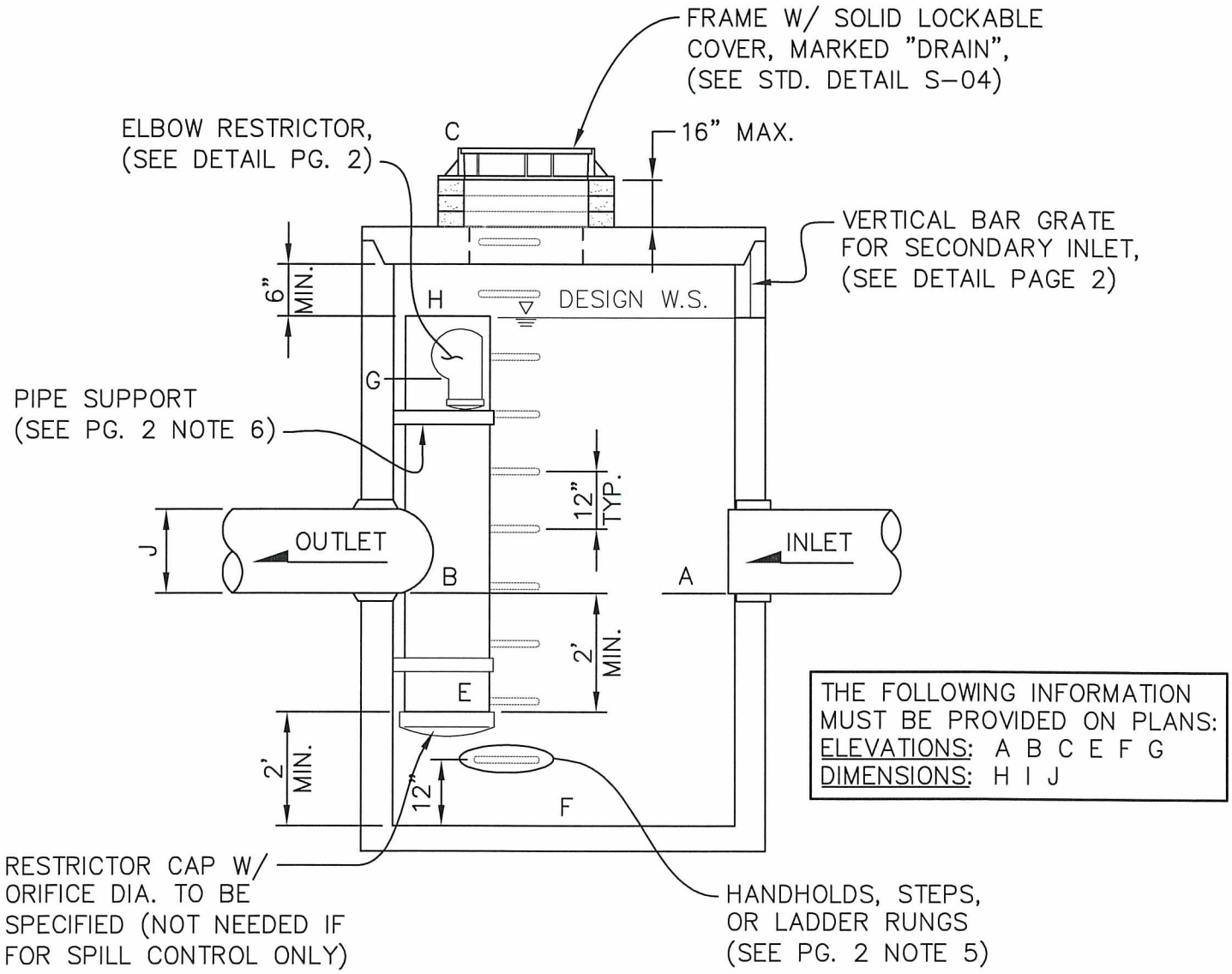

THE FOLLOWING INFORMATION MUST BE PROVIDED ON PLANS:
ELEVATIONS: A B C E F G
DIMENSIONS: H I J

SECTION A–A
NTS

APPROVED BY CITY ENGINEER:	DATE:	CITY OF AUBURN WASHINGTON	FLOW RESTRICTOR (TEE)
	8/5/2016		
COMMUNITY DEVELOPMENT & PUBLIC WORKS DEPT.			STANDARD DETAIL: S-09.1

Plotted by: Craig Dobyns on 7/13/2016 File location: M:\Construction Standard Details\Approved Drawing Files (dwg)\Sewer and Storm\STDETL-S-09.1

NOTE:
THIS DETAIL IS FOR STORM USE ONLY

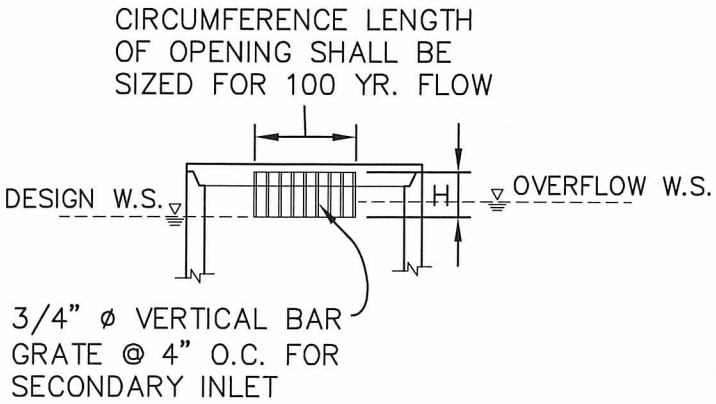

VERTICAL BAR GRATE DETAIL
NTS

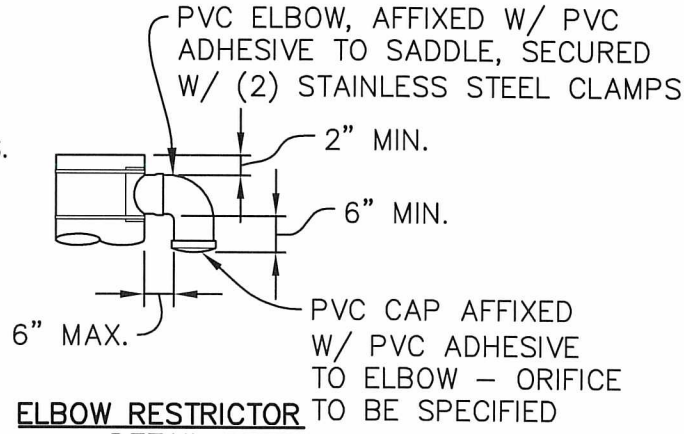

ELBOW RESTRICTOR DETAIL
NTS

NOTES:

1. USE A MINIMUM OF 54" DIA. TYPE 2 CATCH BASIN.
2. OUTLET CAPACITY SHALL BE 100–YR. DEVELOPED PEAK FLOW.
3. RESTRICTOR TO BE MADE WITH NON–GASKETED PVC, SDR–35.
4. FLOW RESTRICTOR TO BE CONNECTED TO OUTLET PIPE WITH GASKETED CONNECTION OR ROMAC COUPLER.
5. BASIN LID FRAME AND LADDER RUNGS OR STEPS ARE OFFSET SO THAT:
   A. RESTRICTOR IS VISIBLE FROM TOP.
   B. ACCESS SPACE IS CLEAR OF RISER AND RESTRICTOR.
   C. COVER FRAME IS CLEAR OF CURB.
6. PROVIDE AT LEAST TWO 3"x0.090 GAUGE STAINLESS STEEL SUPPORT BRACKET ANCHORED 2" INTO CONCRETE WALL WITH MAX. 3' VERTICAL SPACING.
7. LOCATE ELBOW RESTRICTOR AS NECESSARY TO PROVIDE MINIMUM CLEARANCE AS SHOWN. PIPE SIZES AND SLOPE PER PLAN. SHOW ALLOWABLE DISCHARGE "Q"

APPROVED BY CITY ENGINEER:	DATE: 8/5/2016	CITY OF AUBURN WASHINGTON	FLOW RESTRICTOR (TEE)
COMMUNITY DEVELOPMENT & PUBLIC WORKS DEPT.			STANDARD DETAIL: S–09a.1

Plotted by: Craig Dobyne on 7/13/2016 File location: M:\Construction Standard Details\Approved Drawing Files (dwg)\Sewer and Storm\STDETL–S–09a.1

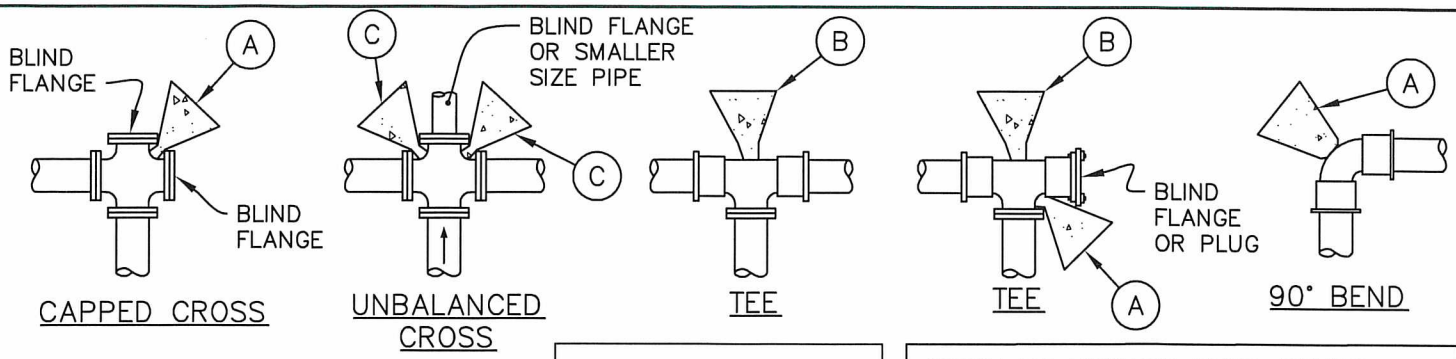

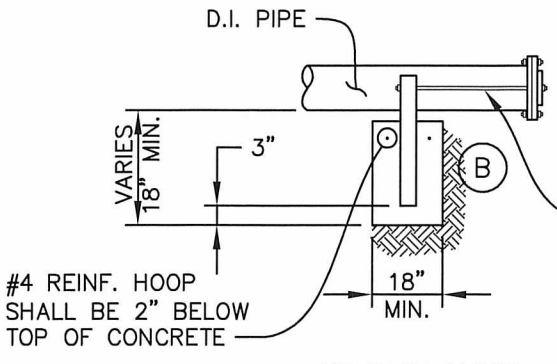

TIE BACK BLOCK DETAIL

NOTE:
SEE STD. DETAIL W-03 FOR TYPICAL BLOW OFF ASSEMBLY. MAINTAIN 2" CLEARANCE BETWEEN CONCRETE AND PIPE

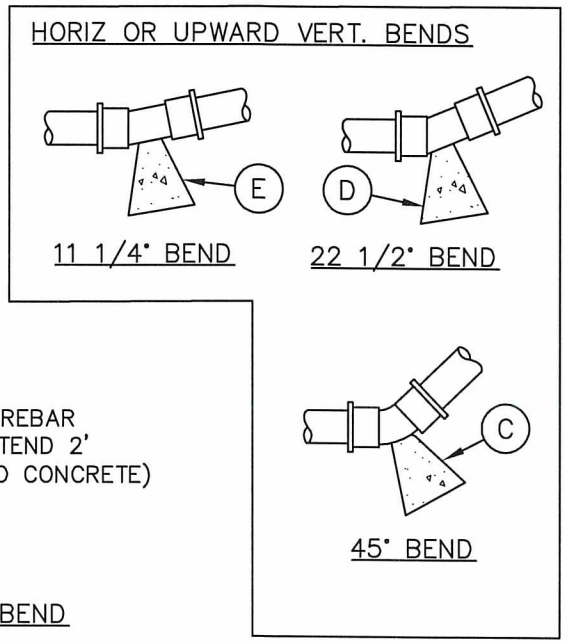

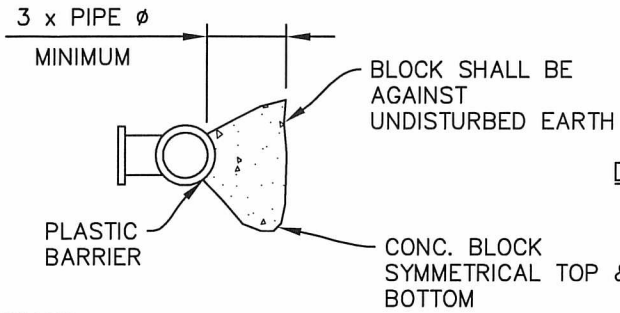

DOWNWARD VERTICAL BEND

NOTES:

1. BEARING AREA OF CONC. THRUST BLOCK IS BASED ON 200 PSI PRESSURE AND SAFE SOIL BEARING LOAD OF 2000 PSF.
2. AREAS MUST BE ADJUSTED FOR OTHER PIPE SIZES, PRESSURES, AND SOIL CONDITIONS.
3. CONCRETE BLOCKING SHALL BE CAST IN PLACE AND HAVE A MINIMUM OF 1/4 SQUARE FOOT BEARING AGAINST THE FITTING.
4. THE BLOCK SHALL BEAR AGAINST THE FITTINGS ONLY AND SHALL BE CLEAR OF JOINTS TO PERMIT TAKING UP AND DISMANTLING OF JOINT.
5. THE CONTRACTOR SHALL INSTALL BLOCKING ADEQUATE TO WITHSTAND FULL TEST PRESSURE AS WELL AS TO CONTINUOUSLY WITHSTAND OPERATING PRESSURE UNDER ALL CONDITIONS OF SERVICE.
6. USE 2" THICK STYROFOAM TO FORM THE CONCRETE BLOCKING. PLASTIC SHALL BE INSTALLED BETWEEN ALL CONCRETE BLOCKING AND FITTINGS.
7. RESTRAINED JOINTS ARE REQUIRED WHERE BEARING SOILS OR FILL MATERIAL ARE DETERMINED BY THE ENGINEER TO BE UNSUITABLE TO PROVIDE ADEQUATE BEARING LOAD, OR THIS SOIL HAS BEEN DISTURBED.

THRUST BLOCK TABLE
MIN. BEARING AGAINST UNDISTURBED SOIL

PIPE SIZE	A SQ. FT.	B SQ. FT.	C SQ. FT.	D SQ. FT.	E SQ. FT.
4"	3	3	2	2	2
6"	4	3	2	2	2
8"	7	5	4	2	2
10"	11	8	6	3	2
12"	16	11	9	5	3
14"	22	15	12	6	3
16"	29	20	16	8	4
18"	36	25	20	10	5
20"	45	32	24	13	6
22"	54	38	29	15	8
24"	64	45	35	18	9
28"	87	62	48	24	12
30"	101	71	55	28	14
36"	145	102	78	40	20
42"	197	139	107	55	27
48"	257	181	140	71	36

APPROVED BY CITY ENGINEER: DATE: 9/8/2016

CITY OF AUBURN WASHINGTON

WATER MAIN BLOCKING

COMMUNITY DEVELOPMENT & PUBLIC WORKS DEPT. STANDARD DETAIL: W-01.1

Plotted by: Craig Dobyns on 8/10/2016 File location: M:\Construction Standard Details\Approved Drawing Files (dwg)\Water\STDETL-W-01.1

NOTE: FOR LOCATIONS WITHOUT CURB, AIR VAC. SHALL BE PLACED ON PROPERTY SIDE OF DITCH. IF NO ROOM IS AVAILABLE, INSTALL CULVERT IN DITCH WITH AIR VAC. IN FILL OVER CULVERT.

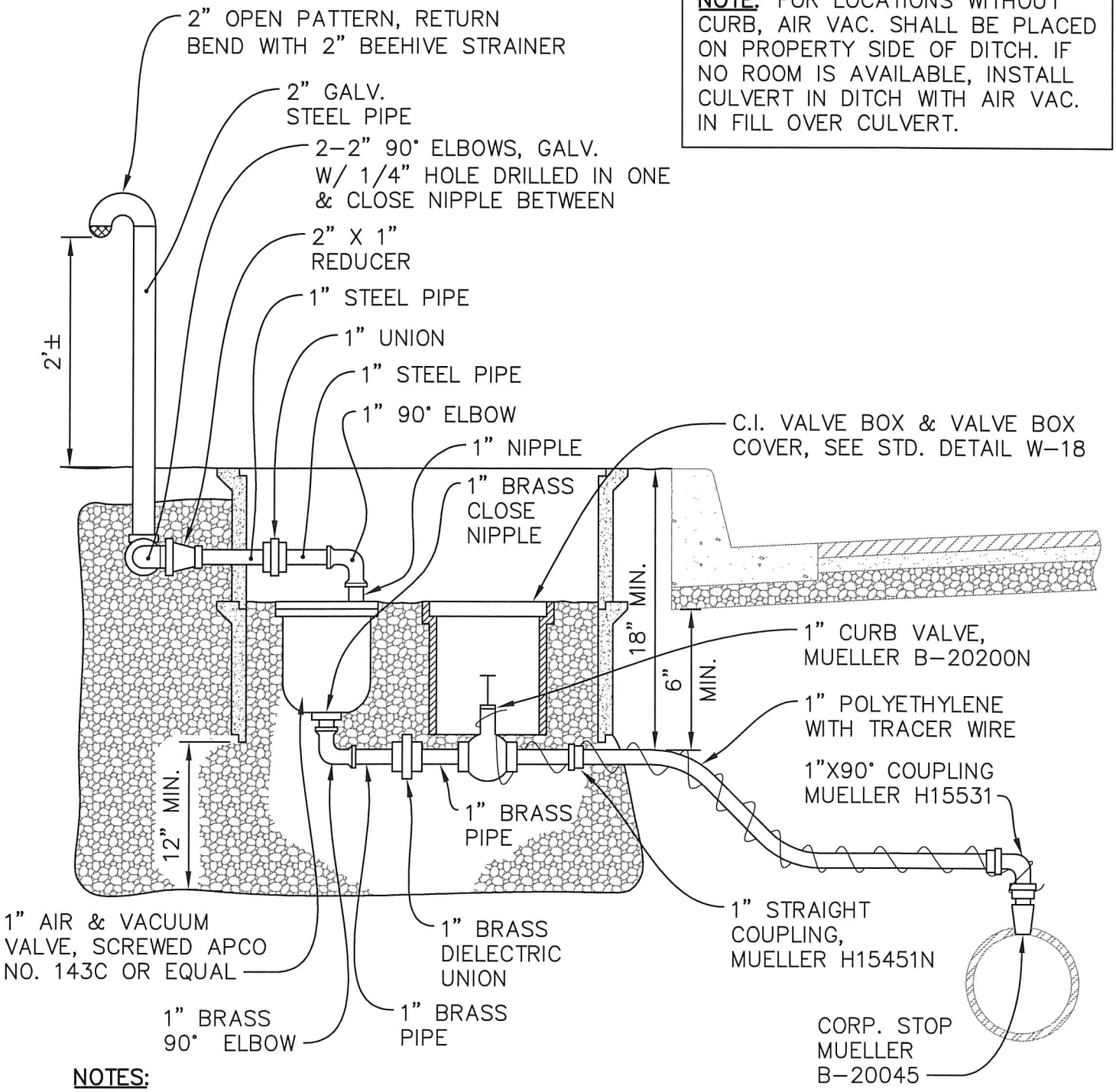

NOTES:

1. AIR VALVE TO BE INSTALLED IN 17" X 30" HUBBELL QUAZITE METER BOX W/ DUCTILE COVER, EAST JORDAN IRON WORKS OR APPROVED EQUIVALENT.
2. BED WITH 3/4"-1 1/2" WASHED ROCK, PASSING -1/2" AND RETAINED ON 1/4" MESH.
3. POLYETHYLENE PIPE SHALL BE AS SPECIFIED IN SECTION 9-30.6(3) OF THE STANDARD SPECIFICATION.
4. DIELECTRIC UNIONS ARE REQUIRED FOR JOINING DISSIMILAR MATERIAL TYPES.
5. MAINTAIN POSITIVE GRADE FROM MAIN TO VALVE.

APPROVED BY CITY ENGINEER:	DATE: 8/5/2016	CITY OF AUBURN WASHINGTON	TYPICAL AIR AND VACUUM RELIEF VALVE DETAIL
COMMUNITY DEVELOPMENT & PUBLIC WORKS DEPT.			STANDARD DETAIL: W-02.1

Plotted by: Craig Dobyns on 7/13/2016 File location: M:\Construction Standard Details\Approved Drawing Files (dwg)\Water\STDETL-W-02.1

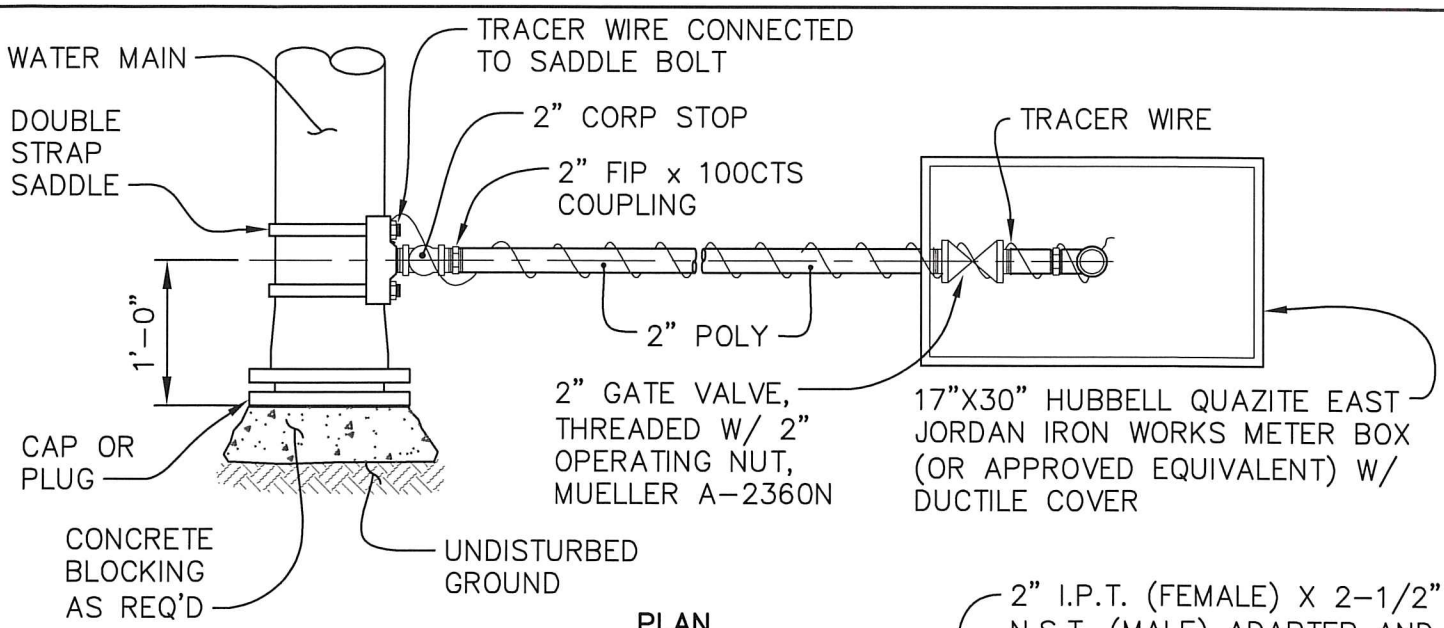

PLAN

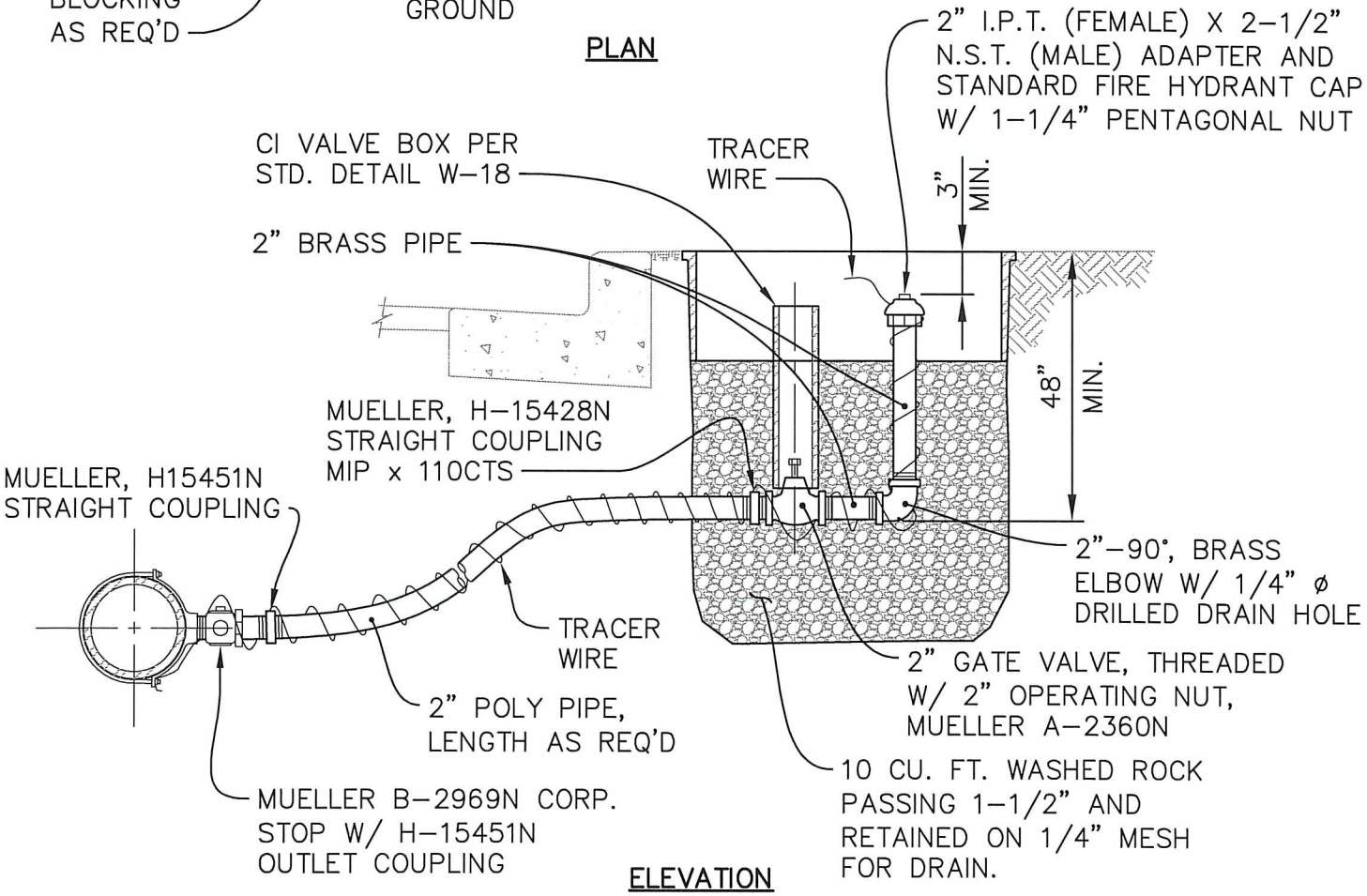

ELEVATION

NOTES:

1. 2" POLY PIPE SHALL BE AS SPECIFIED IN SECTION 9-30.6(3) OF THE CONSTRUCTION STANDARDS AND THE CONTRACT PROVISIONS.
2. SADDLE SHALL BE AS SPECIFIED IN SECTION 9-30.6(1) OF THE CONSTRUCTION STANDARDS AND THE CONTRACT PROVISIONS.
3. FOR LOCATIONS WITHOUT CURB, BLOWOFF SHALL BE PLACED ON PROPERTY SIDE OF THE DITCH. IF NO ROOM IS AVAILABLE, INSTALL CULVERT IN DITCH W/ BLOWOFF IN FILL OVER CULVERT.
4. TRACER WIRE SHALL BE INSULATED #10 COPPER WIRE, BARED AT ENDS.

APPROVED BY CITY ENGINEER:	DATE:	CITY OF AUBURN WASHINGTON	2" PERMANENT BLOW OFF ASSEMBLY
COMMUNITY DEVELOPMENT & PUBLIC WORKS DEPT.			STANDARD DETAIL: W-03.1

Plotted by: Craig Dobyne on 7/13/2016 File location: M:\Construction Standard Details\Approved Drawing Files (dwg)\Water\STDETL-W-03.1

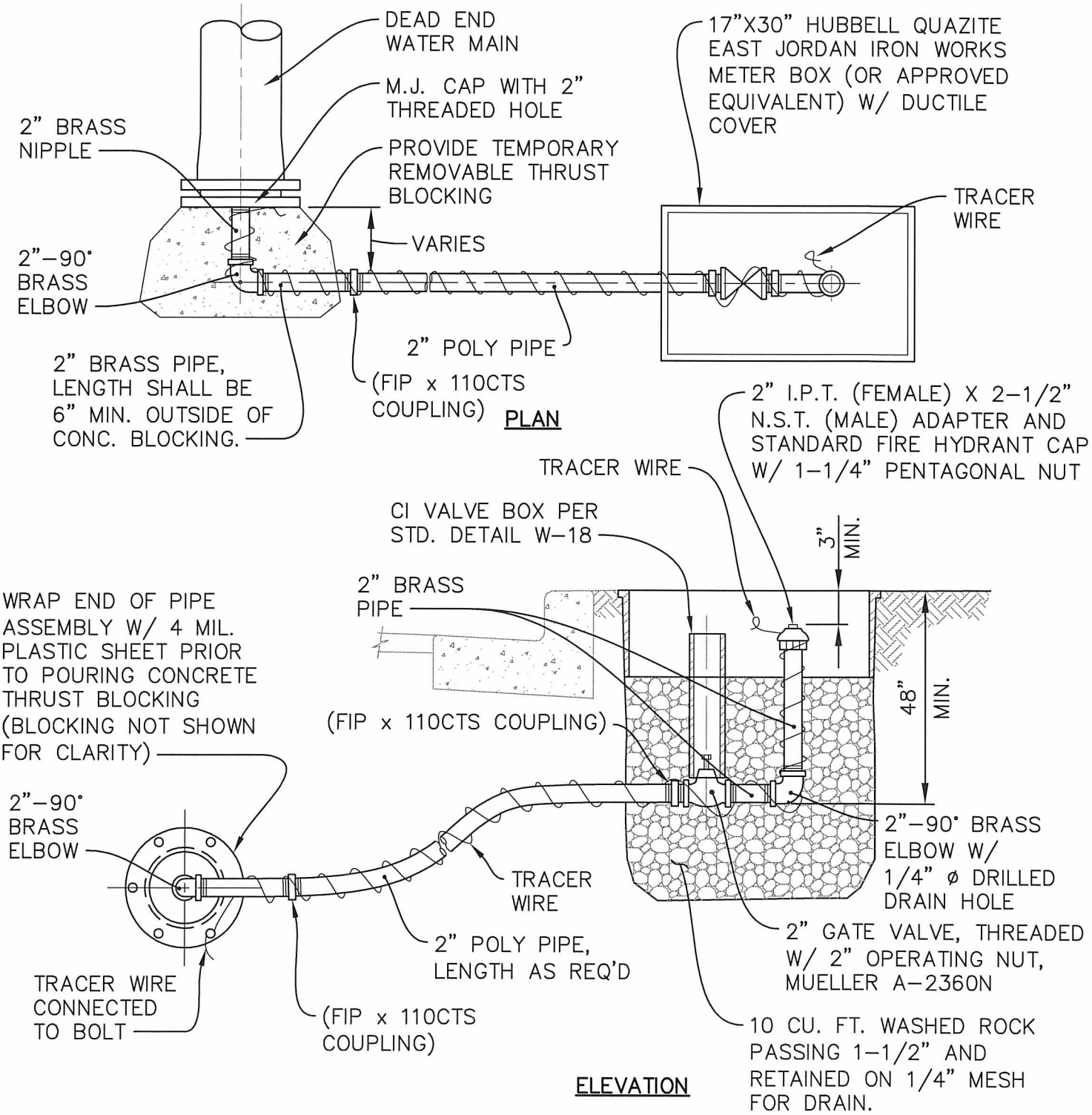

NOTES:

1. 2" POLY PIPE SHALL BE AS SPECIFIED IN SECTION 9-30.6(3) OF THE CONSTRUCTION STANDARDS AND THE CONTRACT PROVISIONS.
2. TEMPORARY BLOWOFFS SHALL BE USED ON ALL DEAD END WATERLINES WITH LOCATION OF BLOWOFF BOX AS SHOWN ON THE PLAN OR WHERE DIRECTED BY THE ENGINEER.
3. TRACER WIRE SHALL BE INSULATED #10 COPPER WIRE, BARED AT ENDS.
4. GATE VALVE SHALL BE AS SPECIFIED IN SECTION 9-30.3(1) OF THE CONSTRUCTION STANDARDS AND THE CONTRACT PROVISIONS.

APPROVED BY CITY ENGINEER:	DATE:	CITY OF AUBURN WASHINGTON	TEMPORARY BLOW OFF DETAIL
	8/5/2016		
COMMUNITY DEVELOPMENT & PUBLIC WORKS DEPT.			STANDARD DETAIL: W-04.1

Plotted by: Craig Dobyne on 7/13/2016 File location: M:\Construction Standard Details\Approved Drawing Files (dwg)\Water\STDETL-W-04.1

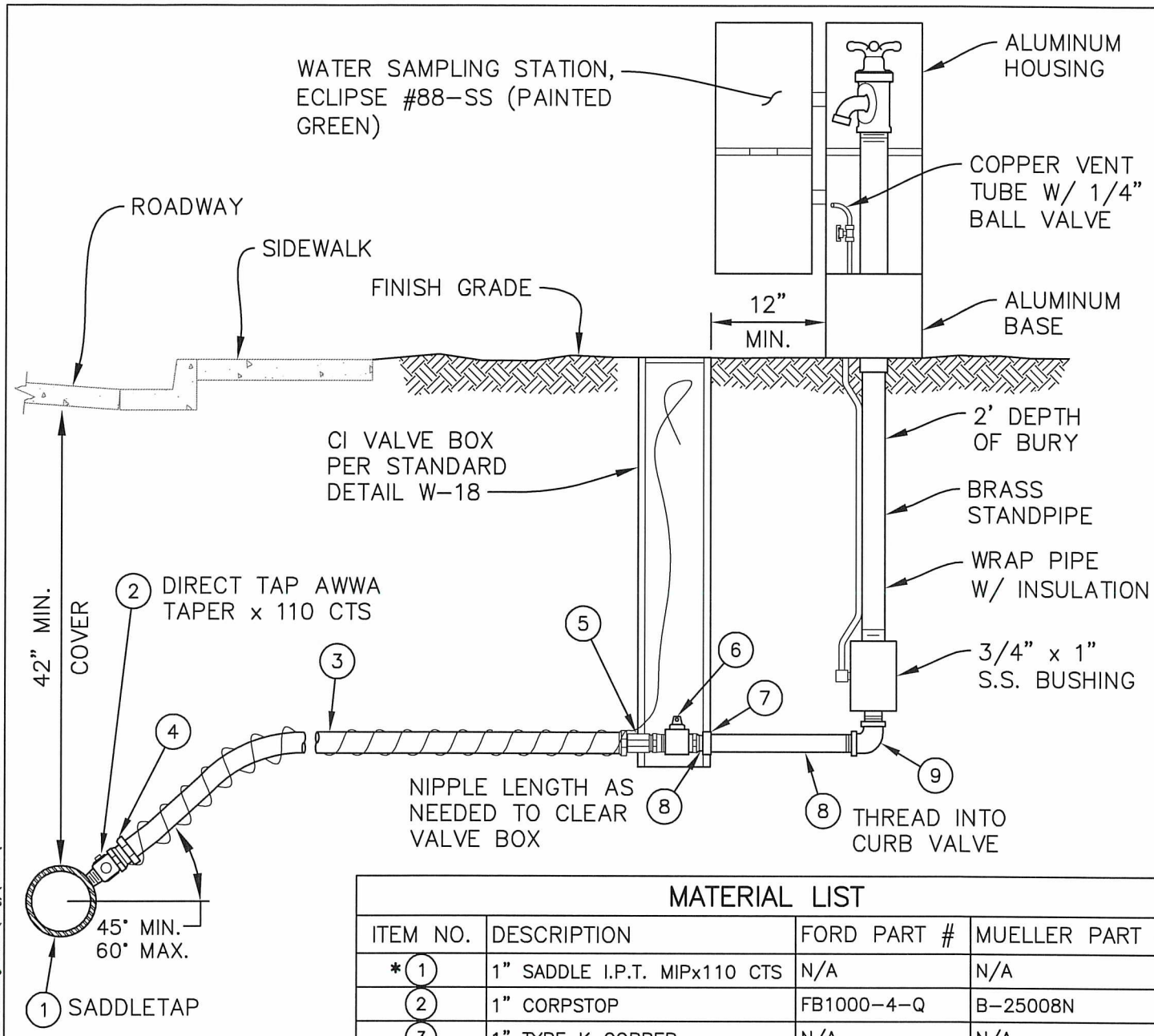

MATERIAL LIST			
ITEM NO.	DESCRIPTION	FORD PART #	MUELLER PART #
* 1	1" SADDLE I.P.T. MIPx110 CTS	N/A	N/A
2	1" CORPSTOP	FB1000-4-Q	B-25008N
3	1" TYPE K COPPER	N/A	N/A
4	1" FIP COMPRESSION ADAPTOR	C14-44-Q-NL	H-15451N
5	1" COMPRESSION x 1" MIP	C84-44-Q-NL	H-15428N
6	1" BALL CURB FIP x FIP	B11-444W-NL	B-20200N
7	1" BRASS UNION	N/A	N/A
8	1" BRASS NIPPLE	N/A	N/A
9	1" 90° BRASS STREET ELL	N/A	N/A

* SADDLES FOR 1-1/2" OR 2" PIPE TAPS SHALL BE EPOXY COATED OR E-COATED DUCTILE IRON W/ DOUBLE STAINLESS STEEL STRAPS & NEOPRENE GASKETS. SADDLES SHALL HAVE I.P.S. FEMALE THREADS.

NOTES:

1. ALL PIPE AND FITTINGS TO BE ASSEMBLED W/ TEFLON AND PIPE DOPE UNLESS OTHERWISE NOTED.
2. SERVICE LINES SHALL BE INSTALLED PERPENDICULAR TO THE WATER MAIN.
3. THE SERVICE LINE SHALL BE INSTALLED TO ALLOW FOR THE FAR SIDE OF THE SAMPLE STATION TO BE INSTALLED IN THE ROW OR EASMENT LINE, UNLESS OTHERWISE DIRECTED BY THE CITY.

APPROVED BY CITY ENGINEER: DATE: 8/5/2016

CITY OF AUBURN WASHINGTON

WATER SAMPLING STATIONING DETAIL

COMMUNITY DEVELOPMENT & PUBLIC WORKS DEPT. STANDARD DETAIL: W-05.1

Plotted by: Craig Dobyns on 7/13/2016 File location: M:\Construction Standard Details\Approved Drawing Files (dwg)\Water\STDETL-W-05.1

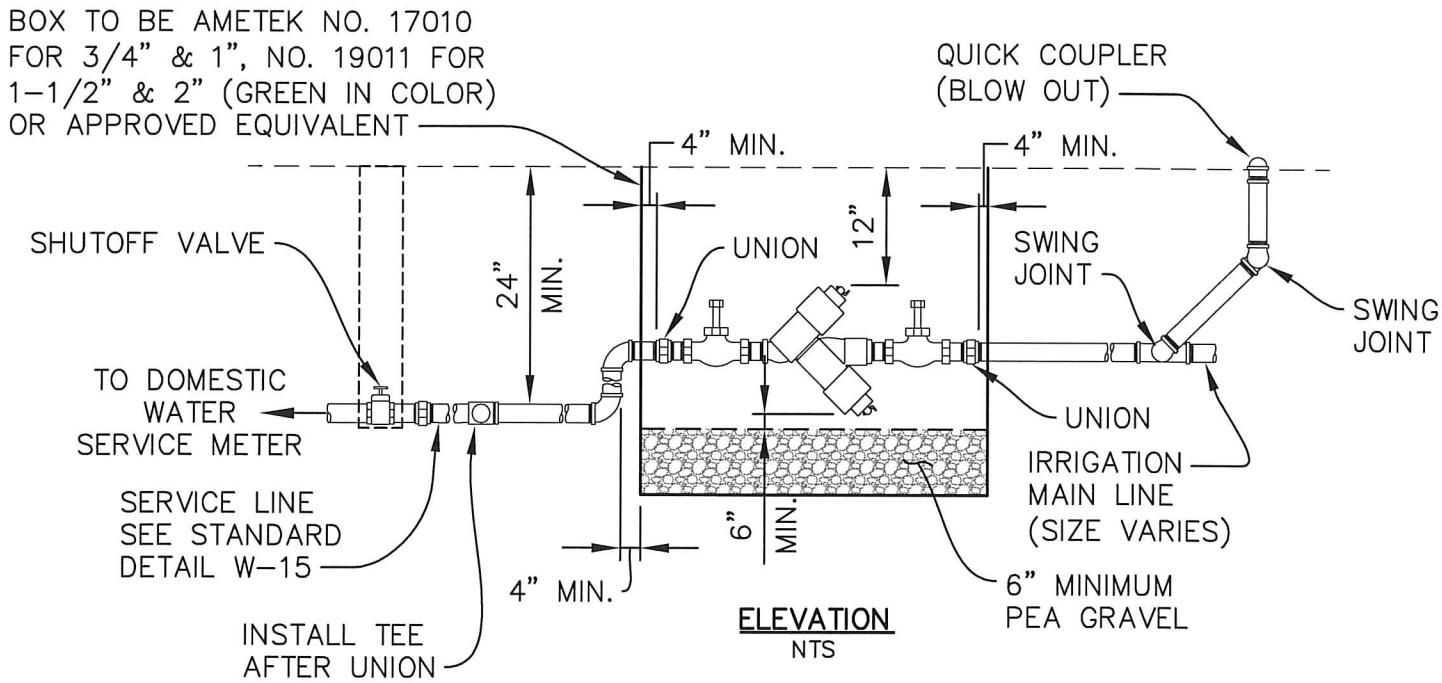

ELEVATION
NTS

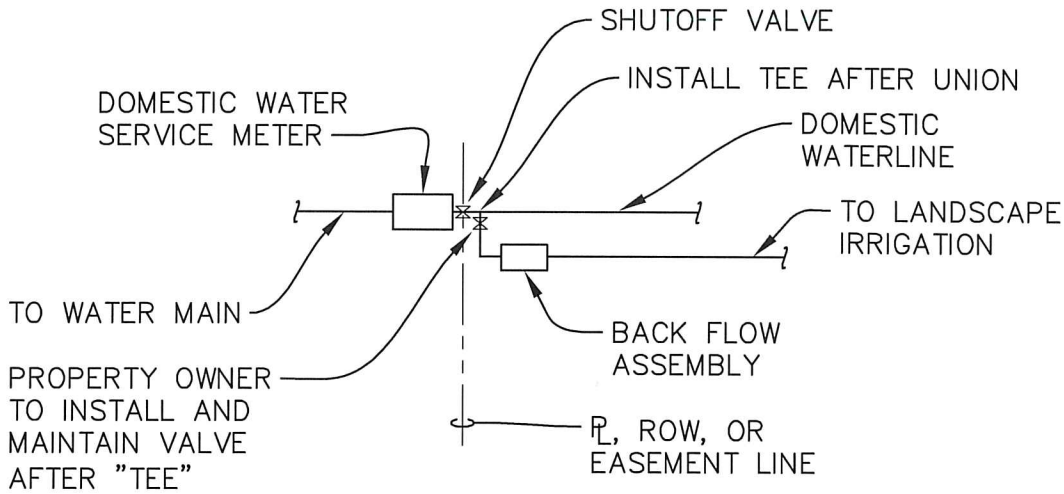

NOTES:

1. BACK FLOW ASSEMBLY MUST HAVE ADEQUATE SPACE CONSIDERATIONS FOR PROPER TESTING AND MAINTENANCE. A MINIMUM OF 12" CLEARANCE FROM ANY OBSTRUCTION ON THE TEST SIDE. A MINIMUM OF 12" CLEARANCE BELOW ASSEMBLY, AND A MINIMUM OF 6" OF PEA GRAVEL IN THE BOTTOM OF THE BOX. THE MINIMUM CLEARANCE FROM THE TOP OF THE PEA GRAVEL TO THE BOTTOM OF THE ASSEMBLY IS 6".

2. DOUBLE CHECK VALVE ASSEMBLY (DCVA) MUST BE INSTALLED WITH TEST COCKS FACING UP. TEST COCKS MUST BE PLUGGED WITH BRASS OR PLASTIC PLUGS.

3. BACK FLOW ASSEMBLY MUST BE APPROVED FOR USE IN WASHINGTON STATE BY THE DEPARTMENT OF HEALTH. IT MUST BE TESTED BY A STATE CERTIFIED "BAT" AT THE TIME OF INSTALLATION, ANNUALLY, AFTER THE ASSEMBLY IS REPAIRED, MOVED, OR AFTER AN INCIDENT AT OWNERS EXPENSE.

4. DCVA MUST HAVE TWO INTERNALLY LOADED CHECK VALVES, TWO RESILIENT SEATED FULL PORTED SHUT OFF VALVES, FOUR PROPERLY LOCATED RESILIENT SEATED TEST COCKS, AND MUST BE INSTALLED AS AN ASSEMBLY, AS SHIPPED BY THE MANUFACTURER.

APPROVED BY CITY ENGINEER:	DATE: 8/5/2016	CITY OF AUBURN WASHINGTON	IRRIGATION FROM DOMESTIC SERVICE LINE WITH DCVA UP TO 2" (SINGLE FAMILY)
COMMUNITY DEVELOPMENT & PUBLIC WORKS DEPT.			STANDARD DETAIL: W-06.1

Plotted by: Craig Dobyns on 7/13/2016 File location: M:\Construction Standard Details\Approved Drawing Files (dwg)\Water\STDETL-W-06.1

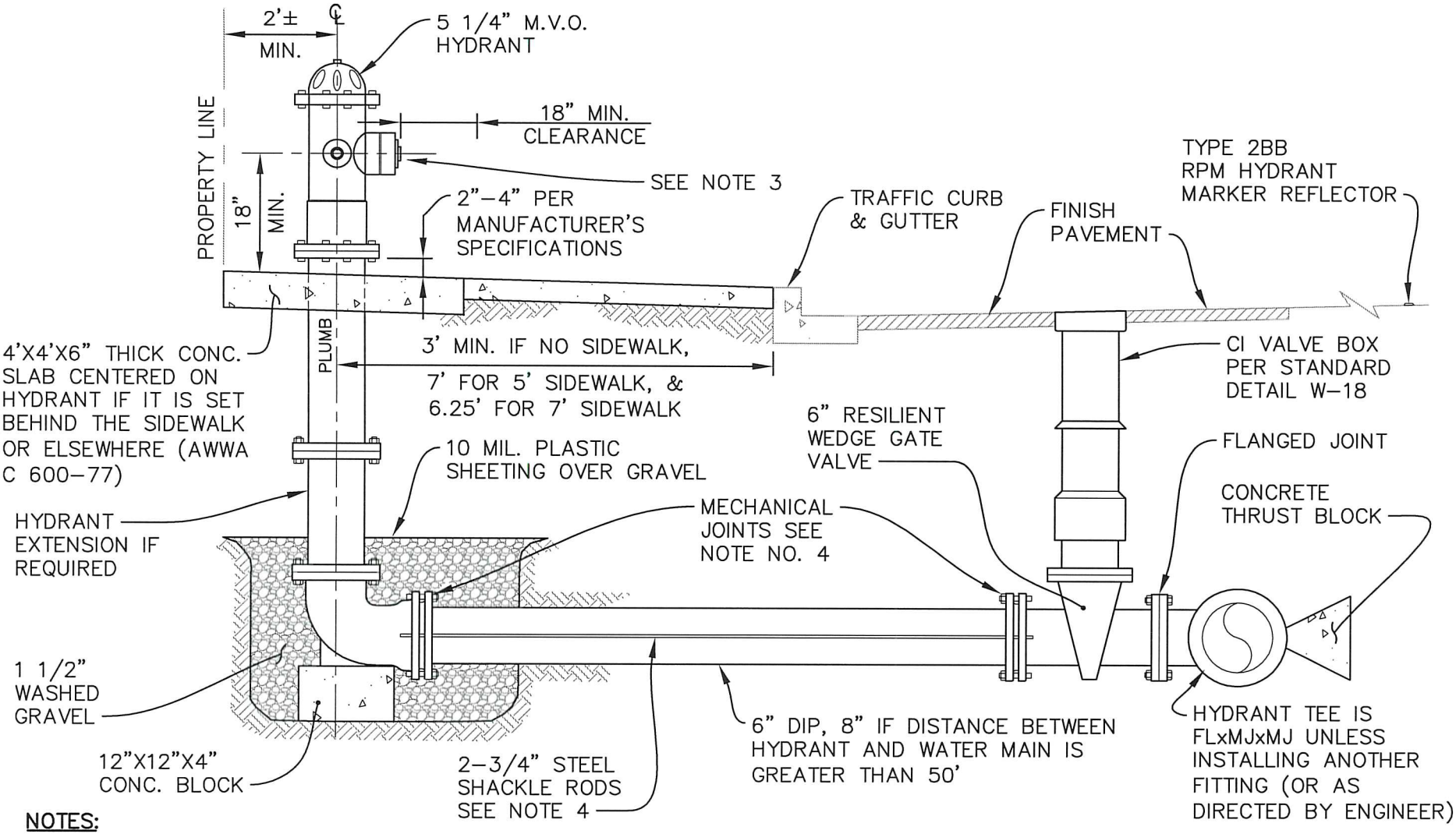

NOTES:

1. HYDRANT SHALL BE LOCATED WITHIN THE R.O.W. BUT NOT IN THE SIDEWALK UNLESS APPROVAL IS GRANTED BY THE CITY.
2. WHERE NO CURB & GUTTER IS INSTALLED, FIRE HYDRANT SHALL BE LOCATED (IN RELATION TO STREET CENTER LINE) AS INDICATED ON THE DRAWINGS.
3. HYDRANTS SHALL HAVE 2-2 1/2" NATIONAL STANDARD THREAD (NST) HOSE PORTS & 1-4 1/2" NST WITH 5" STORZ ADAPTER AND CAP.
4. MEGA-LUGS MAY BE USED IN PLACE OF SHACKLE RODS WITH PRIOR APPROVAL OF THE ENGINEER.
5. ENSURE 5' MINIMUM CLEARANCE TO OBSTACLES FROM CENTERLINE OF HYDRANT.
6. REMOVE CHAINS.

APPROVED BY CITY ENGINEER: [signature]

DATE: 8/5/2016

CITY OF AUBURN WASHINGTON

5 1/4" M.V.O. HYDRANT SETTING DETAIL

COMMUNITY DEVELOPMENT & PUBLIC WORKS DEPT.

STANDARD DETAIL: W-07.1

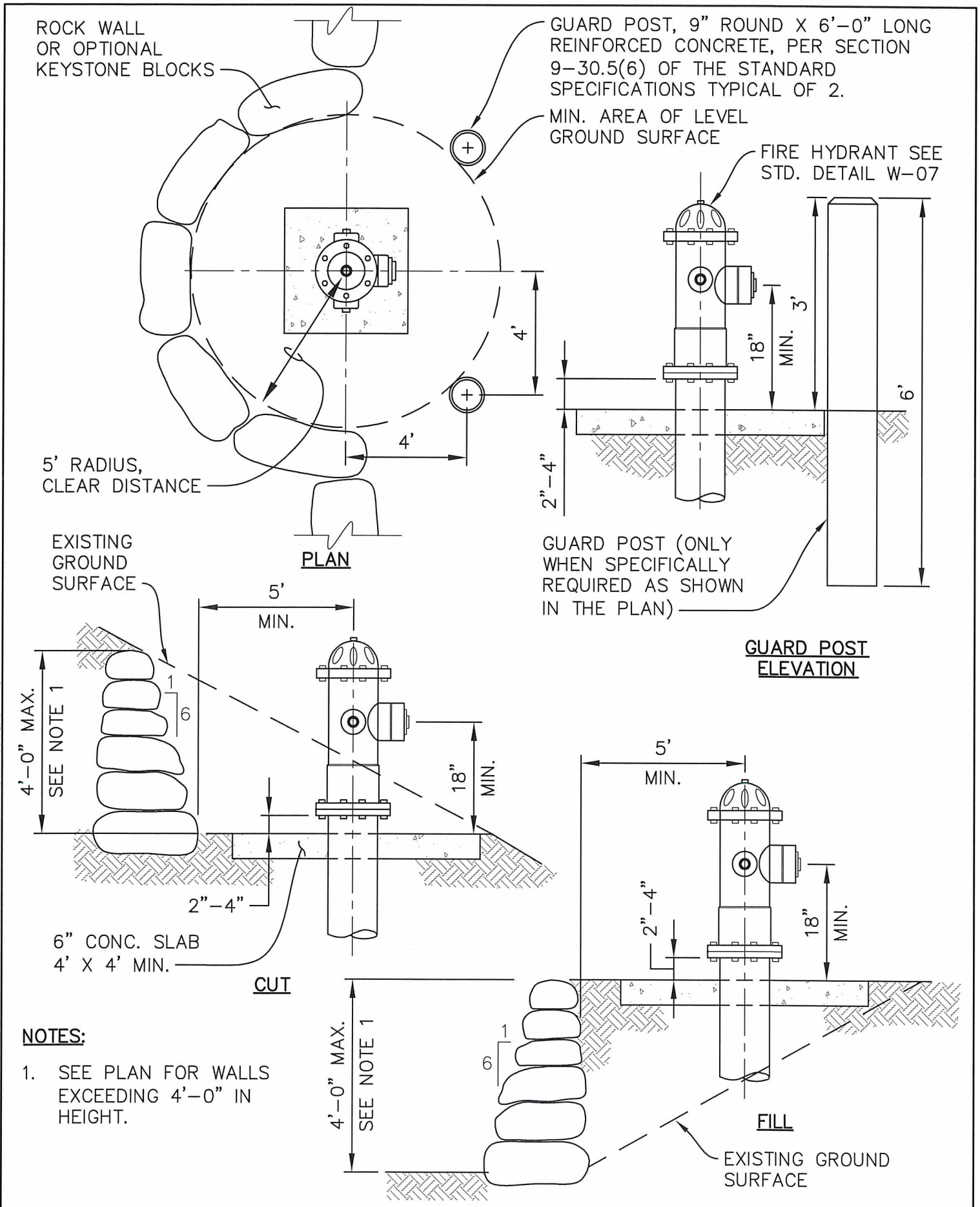

NOTES:

1. SEE PLAN FOR WALLS EXCEEDING 4'-0" IN HEIGHT.

APPROVED BY CITY ENGINEER:	DATE:	CITY OF AUBURN WASHINGTON	FIRE HYDRANT LOCATION IN CUT OR FILL W/ GUARD POSTS
	8/5/2016		
COMMUNITY DEVELOPMENT & PUBLIC WORKS DEPT.			STANDARD DETAIL: W-08.1

Plotted by: Craig Dobyns on 7/13/2016 File location: M:\Construction Standard Details\Approved Drawing Files (dwg)\Water\STDETL-W-08.1

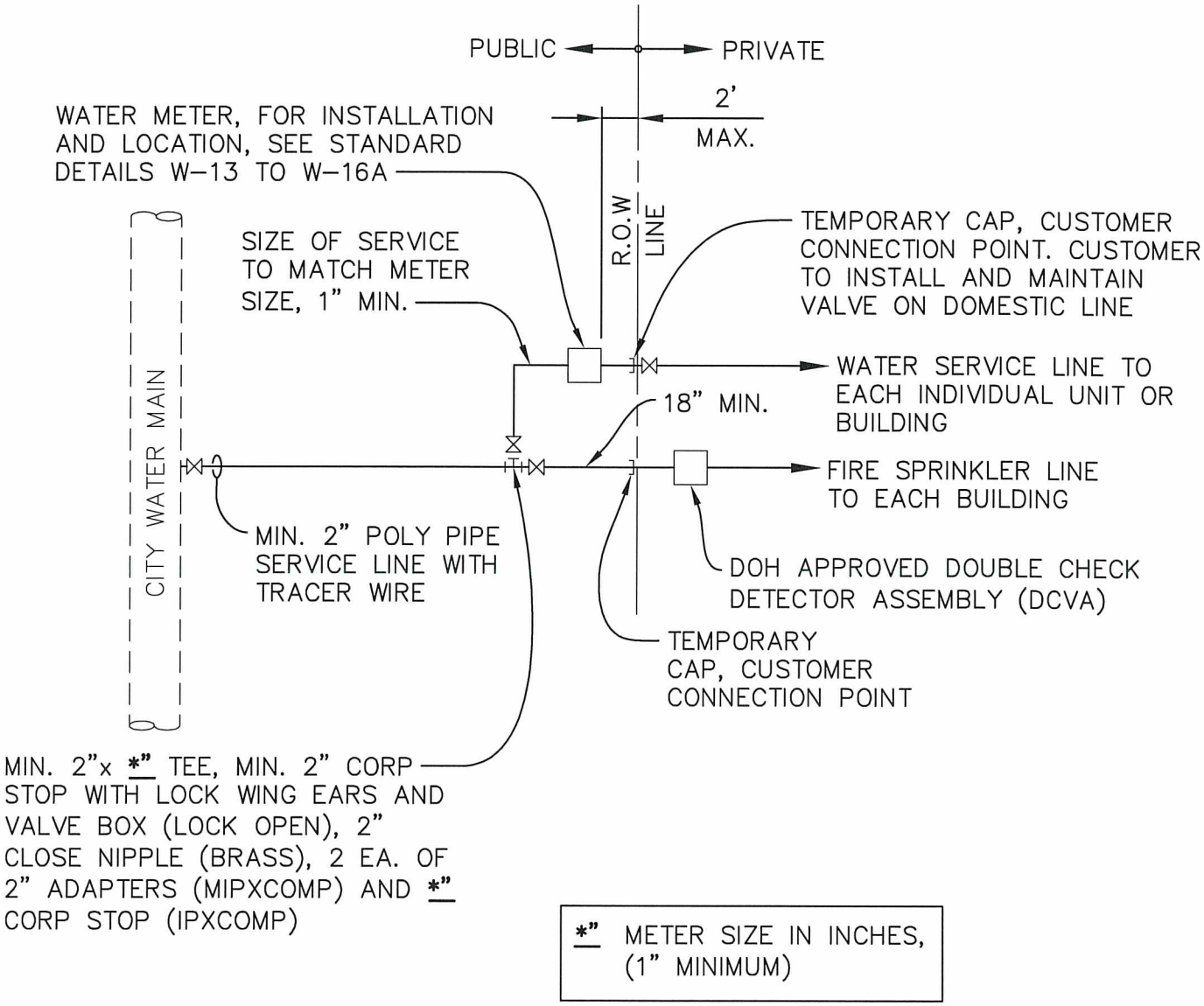

NOTES:

1. THIS DETAIL IS APPLICABLE TO SINGLE AND MULTI FAMILY RESIDENCES.
2. CONNECTION TO CITY WATER MAIN PER CITY OF AUBURN REQUIREMENTS.
3. DOUBLE CHECK VALVE ASSEMBLY (DCVA) REQUIRED ON FIRE SPRINKLER LINE. DCVA CAN BE PLACED IN RISER ROOM, SEE STD. DETAIL W-24 OR STD. DETAIL W-25 FOR MORE INFORMATION.
4. PLANS FOR SEPARATE FIRE SPRINKLER LINE MUST BE SUBMITTED AND APPROVED BY THE FIRE MARSHAL PRIOR TO INSTALLATION.

APPROVED BY CITY ENGINEER:	DATE:	CITY OF AUBURN WASHINGTON	3/4" TO 3" FIRE SPRINKLER LINES WITH DOMESTIC SERVICE LINE
	8/5/2016		
COMMUNITY DEVELOPMENT & PUBLIC WORKS DEPT.			STANDARD DETAIL: W-09.1

Plotted by: Craig Dobyns on 7/13/2016 File location: M:\Construction Standard Details\Approved Drawing Files (dwg)\Water\STDETL-W-09.1

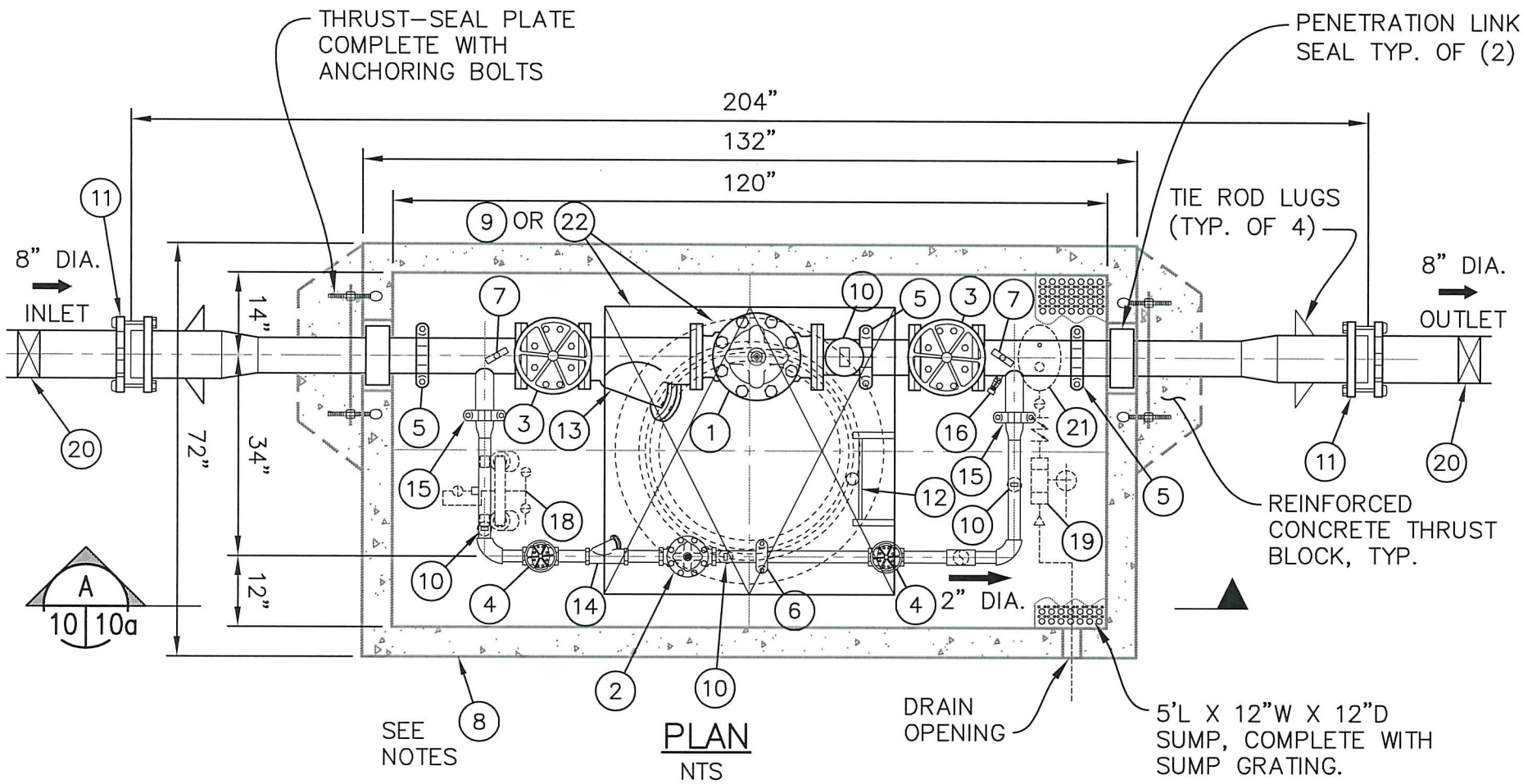

PLAN

NTS

FLOOR TO CENTERLINE OF MAIN PIPING = 24"
(RELIEF LINE REMOVED FOR CLARITY)

STANDARD FABRICATION & FINISHING SPECIFICATION:

1. FABRICATED STEEL PIPING & FITTINGS SHALL BE SCHEDULE 40 FOR SIZES 3" TO 10" IN DIAMETER.
2. ALL 3" DIA. PIPE AND LARGER INSIDE WETTED SURFACES SHALL BE SANDBLASTED, EPOXY LINED AND COATED TO AWWA C-210 AND NSF-61 SPECIFICATION. FINISH COATING SHALL BE BLUE ENAMEL.
3. FABRICATED STAINLESS STEEL PIPING AND FITTINGS SHALL BE SCHEDULE 40 FOR SIZES UP TO 2"

NOTES:

1. VAULT #10565 (H-20 LOADING)
   INSIDE DIMENSIONS:
   10' L x 5' W x 6'-6" H
2. VAULT WEIGHT:
   TOP.....12,300 Lbs
   BOTTOM.....12,000 Lbs
   (WEIGHTS ±10%)

APPROVED BY CITY ENGINEER:

DATE: 8/5/2016

CITY OF AUBURN WASHINGTON

PRESSURE REDUCING VALVE STATION FOR 8" DIA. WATER LINE

COMMUNITY DEVELOPMENT & PUBLIC WORKS DEPT.

STANDARD DETAIL: W-10.1

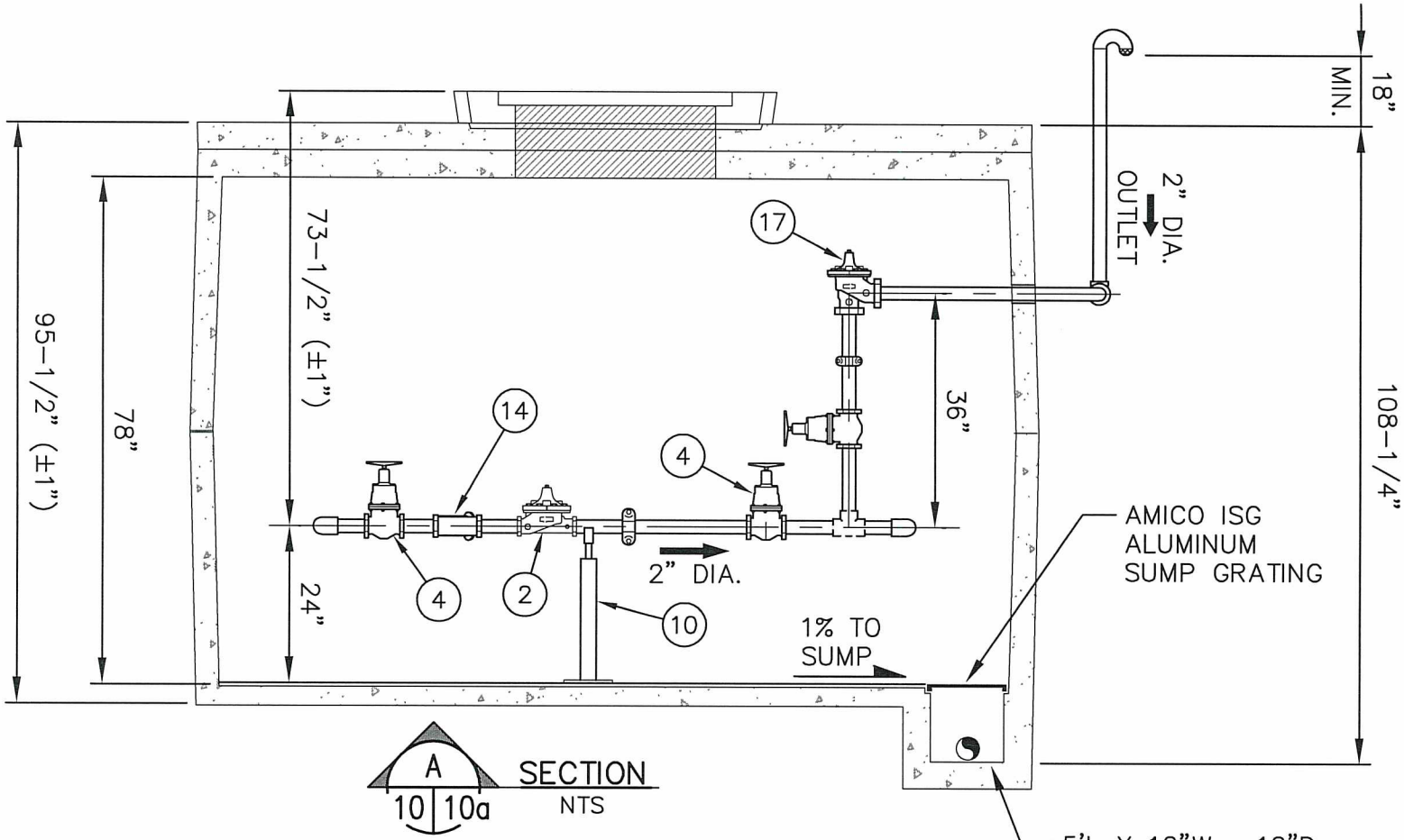

A 10 | 10a SECTION NTS

(MAIN LINE REMOVED FOR CLARITY)

STANDARD FABRICATION & FINISHING SPECIFICATION:

1. FABRICATED STEEL PIPING & FITTINGS SHALL BE SCHEDULE 40 FOR SIZES 3" TO 10" IN DIAMETER.
2. ALL 3" DIA. PIPE AND LARGER INSIDE WETTED SURFACES SHALL BE SANDBLASTED, EPOXY LINED AND COATED TO AWWA C-210 AND NSF-61 SPECIFICATION. FINISH COATING SHALL BE BLUE ENAMEL.
3. VAULTS SHALL BE WATER TIGHT AND PROVIDED WITH GRAVITY DRAIN LINE CONNECTED TO EXISTING STORM SYSTEM OR DRAIN FIELD. WHERE GRAVITY DRAIN IS NOT FEASIBLE, A SUMP PUMP WITH CHECK VALVE ON DISCHARGE LINE SHALL BE PROVIDED.

NOTES:

1. VAULT #10565 (H-20 LOADING)
   INSIDE DIMENSIONS:
   10' L x 5' W x 6'-6" H
2. VAULT WEIGHT:
   TOP.....12,300 Lbs
   BOTTOM.....12,000 Lbs
   (WEIGHTS ±10%)

Sheet 2 of 3

APPROVED BY CITY ENGINEER: DATE: 8/5/2016

CITY OF AUBURN WASHINGTON

PRESSURE REDUCING VALVE STATION FOR 8" DIA. WATER LINE

COMMUNITY DEVELOPMENT & PUBLIC WORKS DEPT.

STANDARD DETAIL: W-10a.1

BILL OF MATERIALS

ITEM	QTY	DESCRIPTION
1	1	6" CLA-VAL 90G-01YBS PRESSURE REDUCING VALVE COMPLETE WITH X101 POS. IND., DIBT-#150 FLGD
2	1	2" CLA-VAL 90G-01YBS PRESSURE REDUCING VALVE COMPLETE WITH X101 POS. IND., DIBT-THREADED
3	2	6" RW NRS GATE VALVE COMPLETE WITH HANDWHEEL-#150 FLGD
4	2	2" RW NRS GATE VALVE COMPLETE WITH HANDWHEEL-THREADED
5	3	6" VICTAULIC #07 COUPLING
6	1	2" VICTAULIC #07 COUPLING
7	2	4" WIKA (0-200 PSI) PRESSURE GAUGE COMPLETE WITH GAUGE COCK
8	1	#10565 PRECAST CONCRETE VAULT - C555 BLACK EXTERIOR DAMP PROOFING, C555 LATEX INTERIOR PAINT
9	1	BILCO 48" X 48" ALUMINUM DOUBLE DOOR HATCH OR APPROVED EQUIVALENT
10	4	ADJUSTABLE PIPE SUPPORTS
11	2	8" SMITH BLAIR OR EBAA TRANSITION COUPLINGS
12	1	ALUMINUM LADDER WITH LADDER UP
13	1	6" MUELLER 758 CAST IRON BODY "Y" STRAINER COMPLETE WITH BLOWDOWN VALVE - #125 FLGD
14	1	2" MUELLER 11M CAST IRON BODY "Y" STRAINER COMPLETE WITH BLOWDOWN VALVE-THREADED
15	2	3" VICTAULIC #07 COUPLING
16	1	3/4" HOSE BIB ASSEMBLY
17	1	**PRESSURE RELIEF VALVE ASSEMBLY INCLUDES:** 2" CLA-VAL 50A-01B PRESSURE RELIEF VALVE ANGLE STYLE - #150 FLGD 2" VICTAULIC #07 COUPLING 2" VICTAULIC #741 COUPLING ADAPTER 2" MUELLER A2360 RW NRS GATE VALVE
18	1	DUPLEX PILOT STRAINER (PIPE MOUNTED)
19	1	AUTOMATIC SUMP DRAIN EJECTOR
20	2	8" RW NRS GATE VALVE W/ VALVE BOX-RESTRAINED JOINT
21	1	1" APCO 143C.1 COMBINATION AIR VALVE ISOLATION VALVE, EXTENSION & BRASS UNION
22	1	OPTIONAL: 30" MANHOLE COVER & FRAME (H20 LOADING) (APPLIES ONLY IF ABSOLUTELY NECESSARY; IT LIMITS EQUIPMENT REMOVAL FROM VAULT)

NOTE:
OPTIONAL EQUIPMENT SHALL BE PROVIDED AS DIRECTED, OR AS APPROVED BY THE CITY OF AUBURN.

APPROVED BY CITY ENGINEER: DATE: 8/5/2016

CITY OF AUBURN WASHINGTON

PRESSURE REDUCING VALVE STATION FOR 8" DIA. WATER LINE

COMMUNITY DEVELOPMENT & PUBLIC WORKS DEPT. STANDARD DETAIL: W-10b.1

Plotted by: Craig Dobyns on 7/13/2016 File location: M:\Construction Standard Details\Approved Drawing Files (dwg)\Water\STDETL-W-10b.1

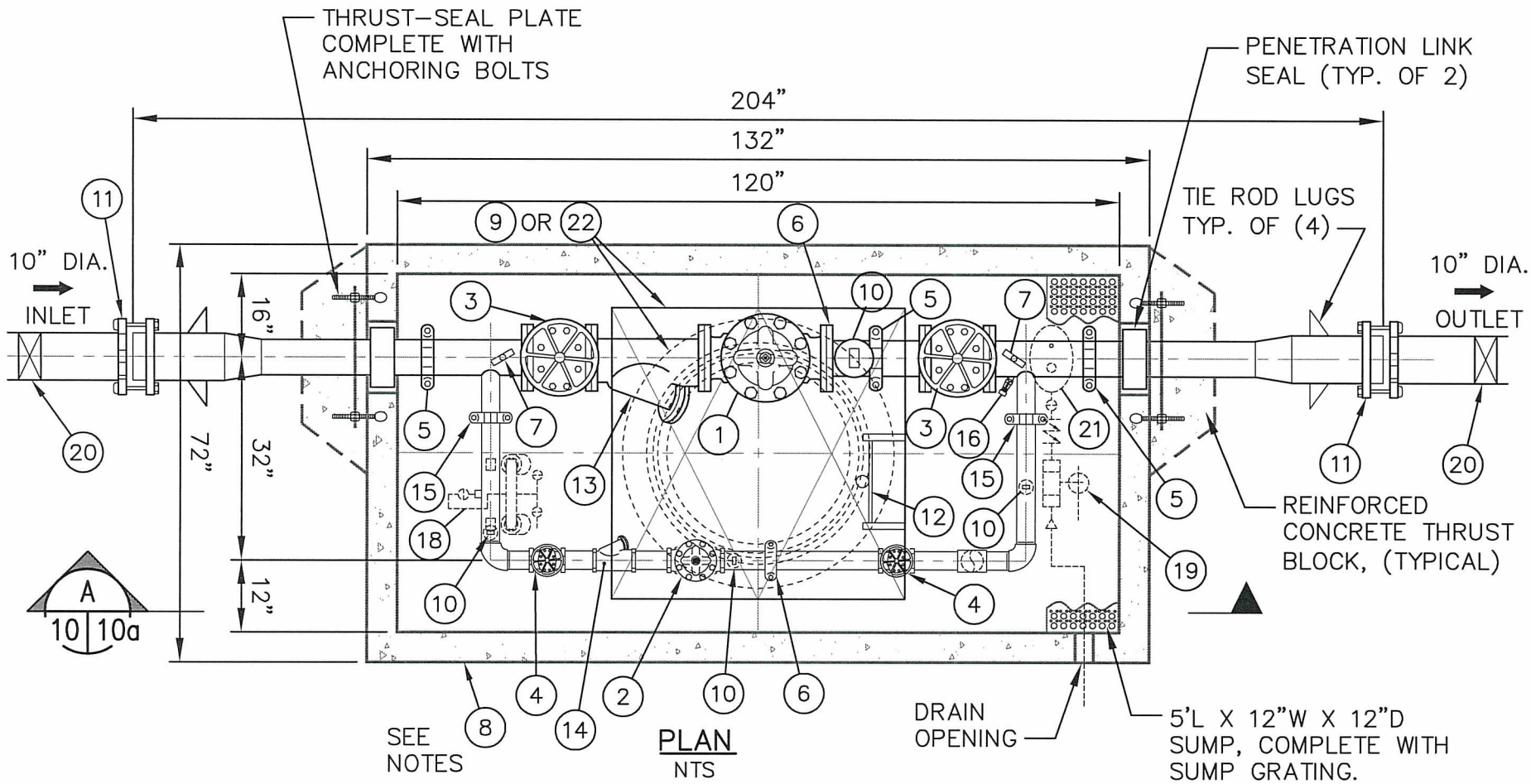

PLAN
NTS

FLOOR TO CENTERLINE OF MAIN PIPING = 24"
(RELIEF LINE REMOVED FOR CLARITY)

STANDARD FABRICATION & FINISHING SPECIFICATION:

1. FABRICATED STEEL PIPING & FITTINGS SHALL BE SCHEDULE 40 FOR SIZES 3" TO 10" IN DIAMETER.
2. ALL 3" DIA. PIPE AND LARGER INSIDE WETTED SURFACES SHALL BE SANDBLASTED, EPOXY LINED AND COATED TO AWWA C-210 AND NSF-61 SPECIFICATION. FINISH COATING SHALL BE BLUE ENAMEL.
3. FABRICATED STAINLESS STEEL PIPING AND FITTINGS SHALL BE SCHEDULE 40 FOR SIZES UP TO 2"

NOTES:

1. VAULT #10565 (H-20 LOADING)
   INSIDE DIMENSIONS:
   10' L x 5' W x 6'-6" H
2. VAULT WEIGHT:
   TOP.....12,300 Lbs
   BOTTOM.....12,000 Lbs
   (WEIGHTS ±10%)

APPROVED BY CITY ENGINEER:

DATE: 8/5/2016

CITY OF AUBURN WASHINGTON

COMMUNITY DEVELOPMENT & PUBLIC WORKS DEPT.

PRESSURE REDUCING VALVE STATION FOR 10" DIA. WATER LINE

STANDARD DETAIL: W-11.1

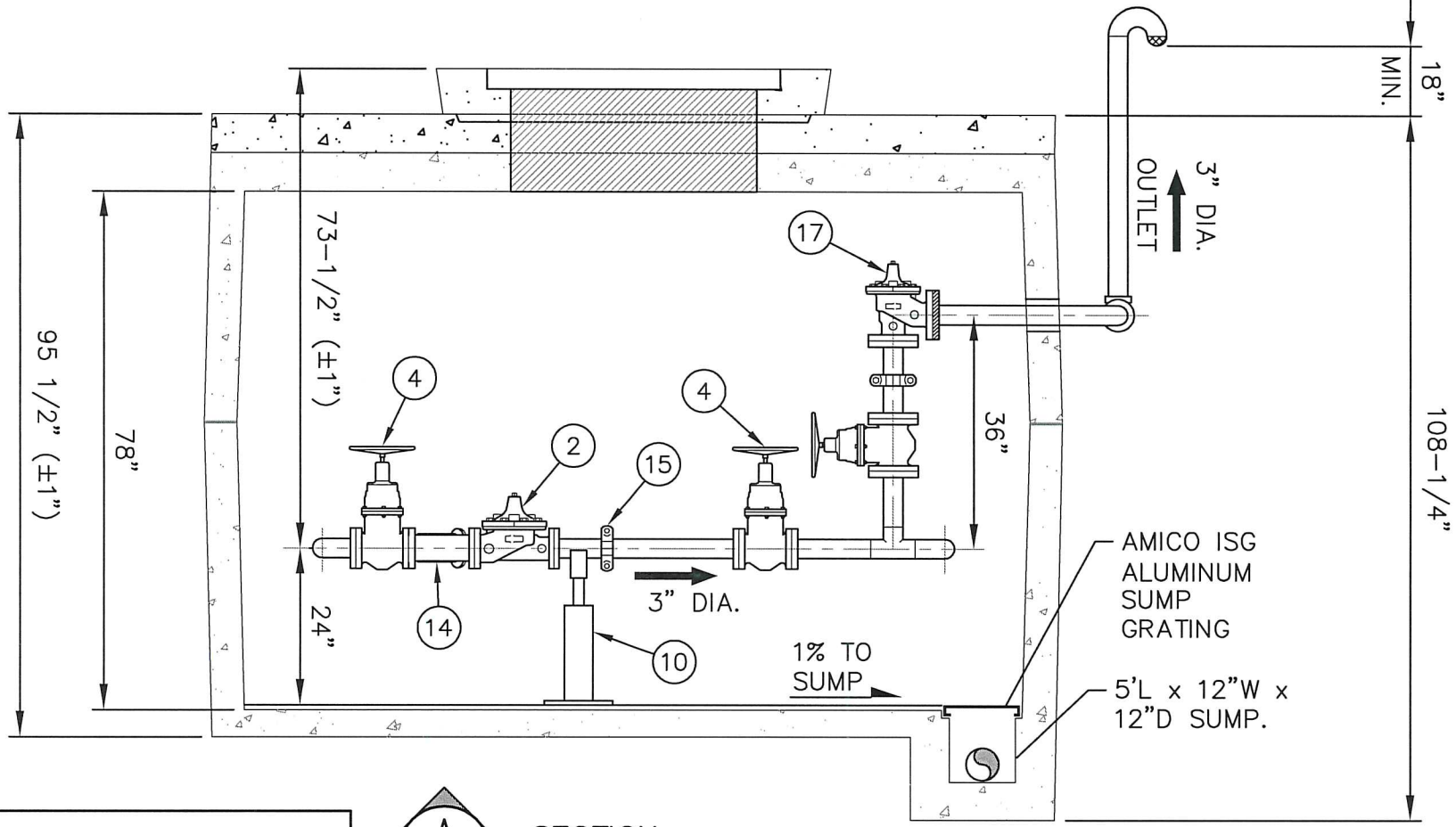

(MAIN LINE REMOVED FOR CLARITY)

A 11 | 11a SECTION NTS

STANDARD FABRICATION & FINISHING SPECIFICATION:

1. FABRICATED STEEL PIPING & FITTINGS SHALL BE SCHEDULE 40 FOR SIZES 3" TO 10" IN DIAMETER.
2. ALL 3" DIA. PIPE AND LARGER INSIDE WETTED SURFACES SHALL BE SANDBLASTED, EPOXY LINED AND COATED TO AWWA C-210 AND NSF-61 SPECIFICATION. FINISH COATING SHALL BE BLUE ENAMEL.
3. VAULTS SHALL BE WATER TIGHT AND PROVIDED WITH GRAVITY DRAIN LINE CONNECTED TO EXISTING STORM SYSTEM OR DRAIN FIELD. WHERE GRAVITY DRAIN IS NOT FEASIBLE, A SUMP PUMP WITH CHECK VALVE ON DISCHARGE LINE SHALL BE PROVIDED.

NOTES:

1. VAULT #10565 (H-20 LOADING)
   INSIDE DIMENSIONS:
   10' L x 5' W x 6'-6" H
2. VAULT WEIGHT:
   TOP.....12,300 Lbs
   BOTTOM.....12,000 Lbs
   (WEIGHTS ±10%)

APPROVED BY CITY ENGINEER: [signature] DATE: 8/5/2016

CITY OF AUBURN WASHINGTON

COMMUNITY DEVELOPMENT & PUBLIC WORKS DEPT.

PRESSURE REDUCING VALVE STATION FOR 10" DIA. WATER LINE

STANDARD DETAIL: W-11a.1

BILL OF MATERIALS

ITEM	QTY	DESCRIPTION
1	1	8" CLA-VAL 90G-01YBS PRESSURE REDUCING VALVE COMPLETE WITH X101 POS. IND., DIBT-#150 FLGD
2	1	3" CLA-VAL 90G-01YBS PRESSURE REDUCING VALVE COMPLETE WITH X101 POS. IND., DIBT-THREADED
3	2	8" RW NRS GATE VALVE COMPLETE WITH HANDWHEEL-#150 FLGD
4	2	3" RW NRS GATE VALVE COMPLETE WITH HANDWHEEL-THREADED
5	3	8" VICTAULIC #07 COUPLING
6	1	3" VICTAULIC #07 COUPLING
7	2	4" WIKA (0-200 PSI) PRESSURE GAUGE COMPLETE WITH GAUGE COCK
8	1	#10565 PRECAST CONCRETE VAULT - C555 BLACK EXTERIOR DAMP PROOFING, C555 WHITE LATEX INTERIOR PAINT
9	1	BILCO 48" X 48" ALUMINUM DOUBLE DOOR HATCH OR APPROVED EQUIVALENT
10	4	ADJUSTABLE PIPE SUPPORTS
11	2	10" SMITH BLAIR OR EBAA TRANSITION COUPLINGS
12	1	ALUMINUM LADDER WITH LADDER UP
13	1	8" MUELLER 758 CAST IRON BODY "Y" STRAINER COMPLETE WITH BLOWDOWN VALVE - #125 FLGD
14	1	3" MUELLER 11M CAST IRON BODY "Y" STRAINER COMPLETE WITH BLOWDOWN VALVE-THREADED
15	2	3" VICTAULIC #07 COUPLING
16	1	3/4" HOSE BIB ASSEMBLY
17	1	<u>PRESSURE RELIEF VALVE ASSEMBLY INCLUDES:</u> 3" CLA-VAL 50A-01B PRESSURE RELIEF VALVE ANGLE STYLE - #150 FLGD 3" VICTAULIC #07 COUPLING 3" VICTAULIC #741 COUPLING ADAPTER 3" MUELLER A2360 RW NRS GATE VALVE
18	1	DUPLEX PILOT STRAINER (PIPE MOUNTED)
19	1	AUTOMATIC SUMP DRAIN EJECTOR
20	2	10" RW NRS GATE VALVE W/ VALVE BOX-RESTRAINED JOINT
21	1	1" APCO 143C.1 COMBINATION AIR VALVE ISOLATION VALVE, EXTENSION & BRASS UNION
22	1	<u>OPTIONAL</u>: 30" MANHOLE COVER & FRAME (H20 LOADING) (APPLIES ONLY IF ABSOLUTELY NECESSARY; IT LIMITS EQUIPMENT REMOVAL FROM VAULT)

<u>NOTE</u>:
OPTIONAL EQUIPMENT SHALL BE PROVIDED AS DIRECTED, OR AS APPROVED BY THE CITY OF AUBURN.

APPROVED BY CITY ENGINEER: DATE: 8/5/2016

CITY OF AUBURN WASHINGTON

PRESSURE REDUCING VALVE STATION FOR 10" DIA. WATER LINE

COMMUNITY DEVELOPMENT & PUBLIC WORKS DEPT. STANDARD DETAIL: W-11b.1

Plotted by: Craig Dobyns on 7/13/2016 File location: M:\Construction Standard Details\Approved Drawing Files (dwg)\Water\STDETL-W-11b.1

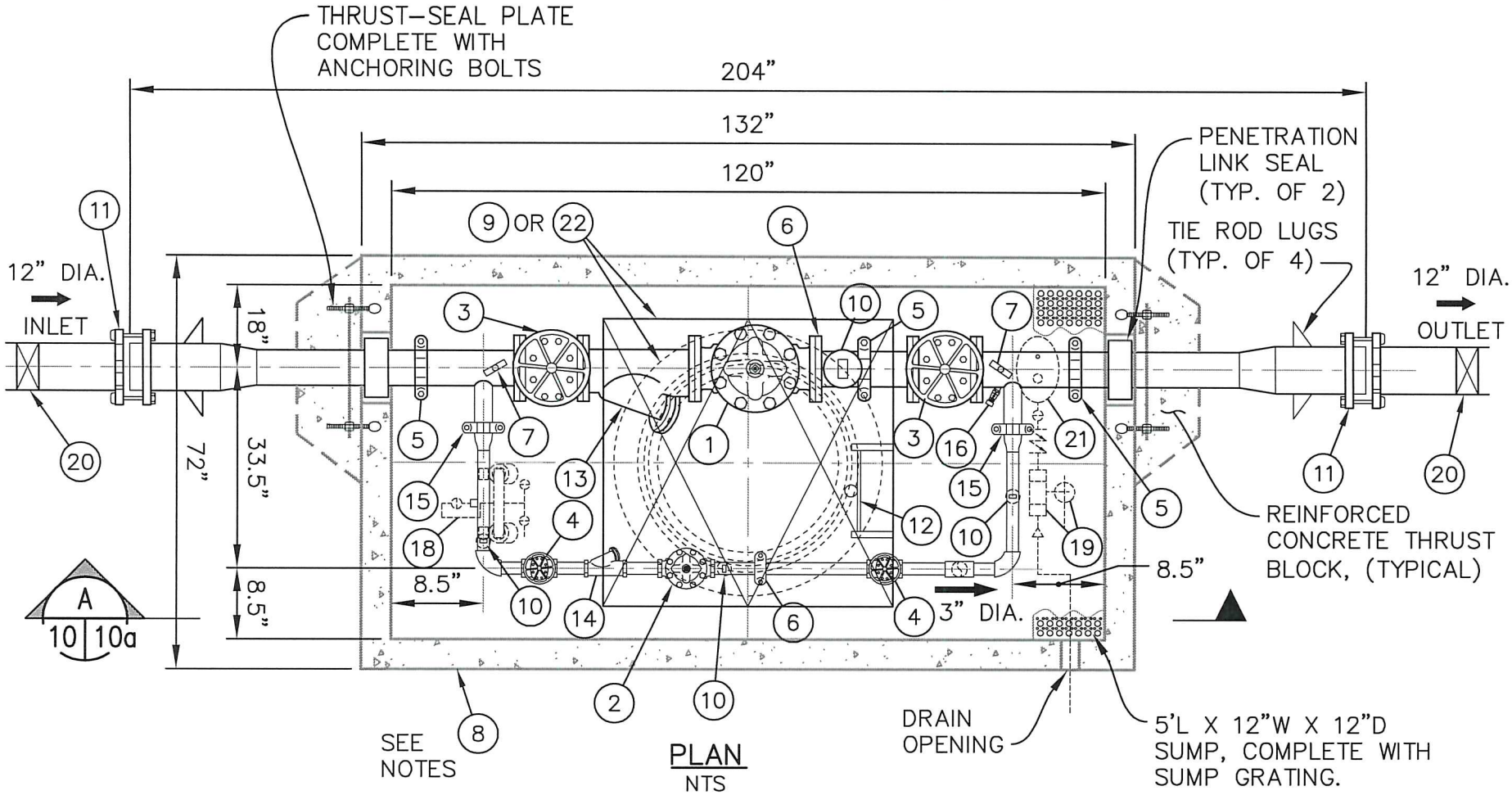

PLAN
NTS

FLOOR TO CENTERLINE OF MAIN PIPING = 24"
(RELIEF LINE REMOVED FOR CLARITY)

STANDARD FABRICATION & FINISHING SPECIFICATION:

1. FABRICATED STEEL PIPING & FITTINGS SHALL BE SCHEDULE 40 FOR SIZES 3" TO 10" IN DIAMETER.
2. ALL 3" DIA. PIPE AND LARGER INSIDE WETTED SURFACES SHALL BE SANDBLASTED, EPOXY LINED AND COATED TO AWWA C-210 AND NSF-61 SPECIFICATION. FINISH COATING SHALL BE BLUE ENAMEL.
3. FABRICATED STAINLESS STEEL PIPING AND FITTINGS SHALL BE SCHEDULE 40 FOR SIZES UP TO 2"

NOTES:

1. VAULT #10565 (H-20 LOADING)
   INSIDE DIMENSIONS:
   10' L x 5' W x 6'-6" H
2. VAULT WEIGHT:
   TOP.....12,300 Lbs
   BOTTOM.....12,000 Lbs
   (WEIGHTS ±10%)

APPROVED BY CITY ENGINEER:

DATE: 8/5/2016

CITY OF AUBURN WASHINGTON

PRESSURE REDUCING VALVE STATION FOR 12" DIA. WATER LINE

COMMUNITY DEVELOPMENT & PUBLIC WORKS DEPT.

STANDARD DETAIL: W-12.1

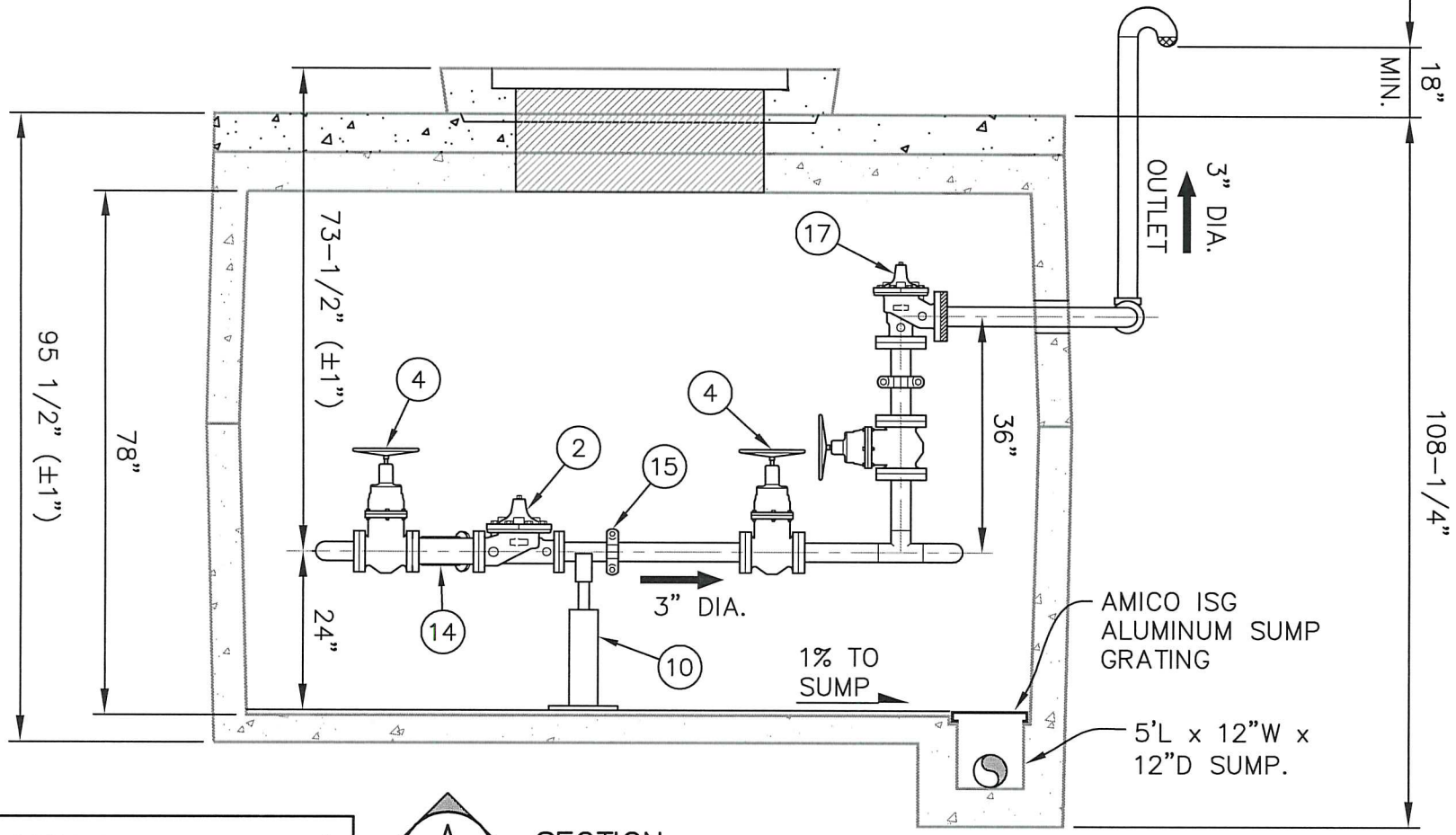

(MAIN LINE REMOVED FOR CLARITY)

A 11 | 11a SECTION NTS

STANDARD FABRICATION & FINISHING SPECIFICATION:

1. FABRICATED STEEL PIPING & FITTINGS SHALL BE SCHEDULE 40 FOR SIZES 3" TO 10" IN DIAMETER.
2. ALL 3" DIA. PIPE AND LARGER INSIDE WETTED SURFACES SHALL BE SANDBLASTED, EPOXY LINED AND COATED TO AWWA C-210 AND NSF-61 SPECIFICATION. FINISH COATING SHALL BE BLUE ENAMEL.
3. VAULTS SHALL BE WATER TIGHT AND PROVIDED WITH GRAVITY DRAIN LINE CONNECTED TO EXISTING STORM SYSTEM OR DRAIN FIELD. WHERE GRAVITY DRAIN IS NOT FEASIBLE, A SUMP PUMP WITH CHECK VALVE ON DISCHARGE LINE SHALL BE PROVIDED.

NOTES:

1. VAULT #10565 (H-20 LOADING)
   INSIDE DIMENSIONS:
   10' L x 5' W x 6'-6" H
2. VAULT WEIGHT:
   TOP.....12,300 Lbs
   BOTTOM.....12,000 Lbs
   (WEIGHTS ±10%)

APPROVED BY CITY ENGINEER: [signature]

DATE: 8/5/2016

CITY OF AUBURN WASHINGTON

PRESSURE REDUCING VALVE STATION FOR 12" DIA. WATER LINE

Sheet 2 of 3

COMMUNITY DEVELOPMENT & PUBLIC WORKS DEPT.

STANDARD DETAIL: W-12a.1

BILL OF MATERIALS

ITEM	QTY	DESCRIPTION
1	1	10" CLA-VAL 90G-01YBS PRESSURE REDUCING VALVE COMPLETE WITH X101 POS. IND., DIBT-#150 FLGD
2	1	3" CLA-VAL 90G-01YBS PRESSURE REDUCING VALVE COMPLETE WITH X101 POS. IND., DIBT-THREADED
3	2	10" RW NRS GATE VALVE COMPLETE WITH HANDWHEEL-#150 FLGD
4	2	3" RW NRS GATE VALVE COMPLETE WITH HANDWHEEL-THREADED
5	3	10" VICTAULIC #07 COUPLING
6	1	3" VICTAULIC #07 COUPLING
7	2	4" WIKA (0-200 PSI) PRESSURE GAUGE COMPLETE WITH GAUGE COCK
8	1	#10565 PRECAST CONCRETE VAULT WHITE LATEX INTERIOR & BLACK TAR EXTERIOR
9	1	BILCO 48" X 48" ALUMINUM DOUBLE DOOR HATCH OR APPROVED EQUIVALENT
10	4	ADJUSTABLE PIPE SUPPORTS
11	2	12" SMITH BLAIR OR EBAA TRANSITION COUPLINGS
12	1	ALUMINUM LADDER WITH SAFETY POST
13	1	10" MUELLER 758 CAST IRON BODY "Y" STRAINER COMPLETE WITH BLOWDOWN VALVE - #125 FLGD
14	1	3" MUELLER 11M CAST IRON BODY "Y" STRAINER COMPLETE WITH BLOWDOWN VALVE-THREADED
15	2	4" VICTAULIC #07 COUPLING
16	1	3/4" HOSE BIB ASSEMBLY
17	1	<u>PRESSURE RELIEF VALVE ASSEMBLY INCLUDES:</u> 3" CLA-VAL 50A-01B PRESSURE RELIEF VALVE ANGLE STYLE - #150 FLGD 3" VICTAULIC #07 COUPLING 3" VICTAULIC #741 COUPLING ADAPTER 3" MUELLER A2360 RW NRS GATE VALVE
18	1	DUPLEX PILOT STRAINER (PIPE MOUNTED)
19	1	AUTOMATIC SUMP DRAIN EJECTOR
20	2	12" RW NRS GATE VALVE W/ VALVE BOX-RESTRAINED JOINT
21	1	1" APCO 143C.1 COMBINATION AIR VALVE ISOLATION VALVE, EXTENSION & BRASS UNION
22	1	<u>OPTIONAL</u>: 30" MANHOLE COVER & FRAME (H20 LOADING) (APPLIES ONLY IF ABSOLUTELY NECESSARY; IT LIMITS EQUIPMENT REMOVAL FROM VAULT)

<u>NOTE:</u>
OPTIONAL EQUIPMENT SHALL BE PROVIDED AS DIRECTED, AND OR AS APPROVED BY THE CITY OF AUBURN.

APPROVED BY CITY ENGINEER: DATE: 8/5/2016

CITY OF AUBURN WASHINGTON

PRESSURE REDUCING VALVE STATION FOR 12" DIA. WATER LINE

COMMUNITY DEVELOPMENT & PUBLIC WORKS DEPT. STANDARD DETAIL: W-12b.1

Plotted by: Craig Dobyne on 7/13/2016 File location: M:\Construction Standard Details\Approved Drawing Files (dwg)\Water\STDETL-W-12b.1

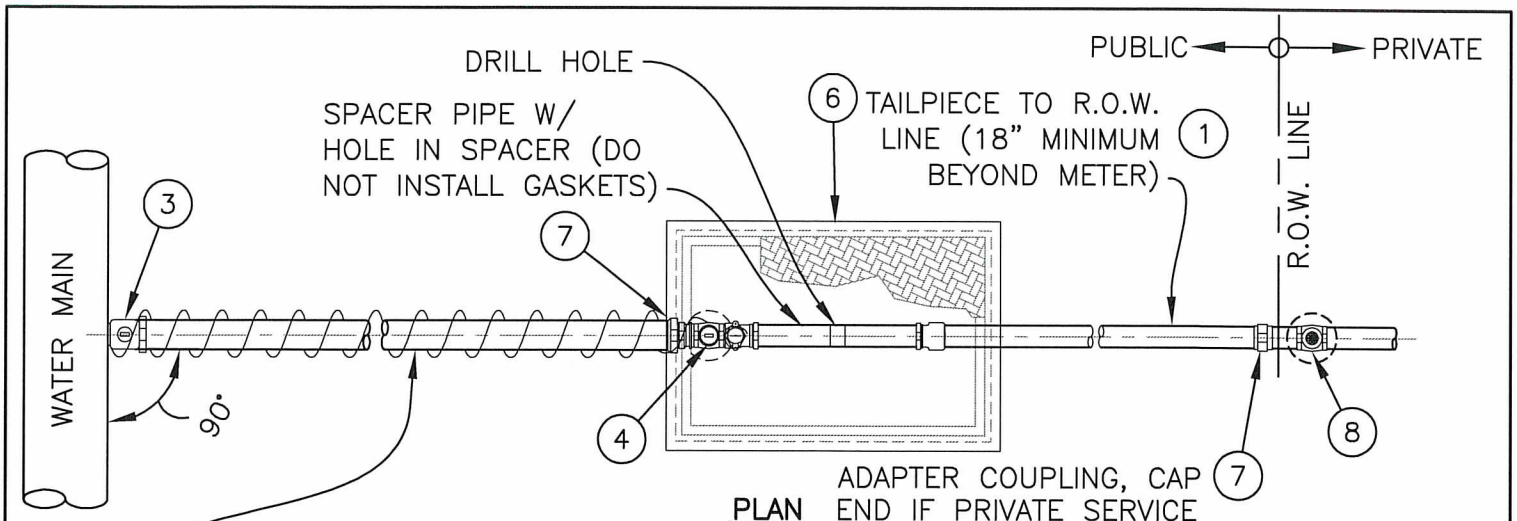

PLAN

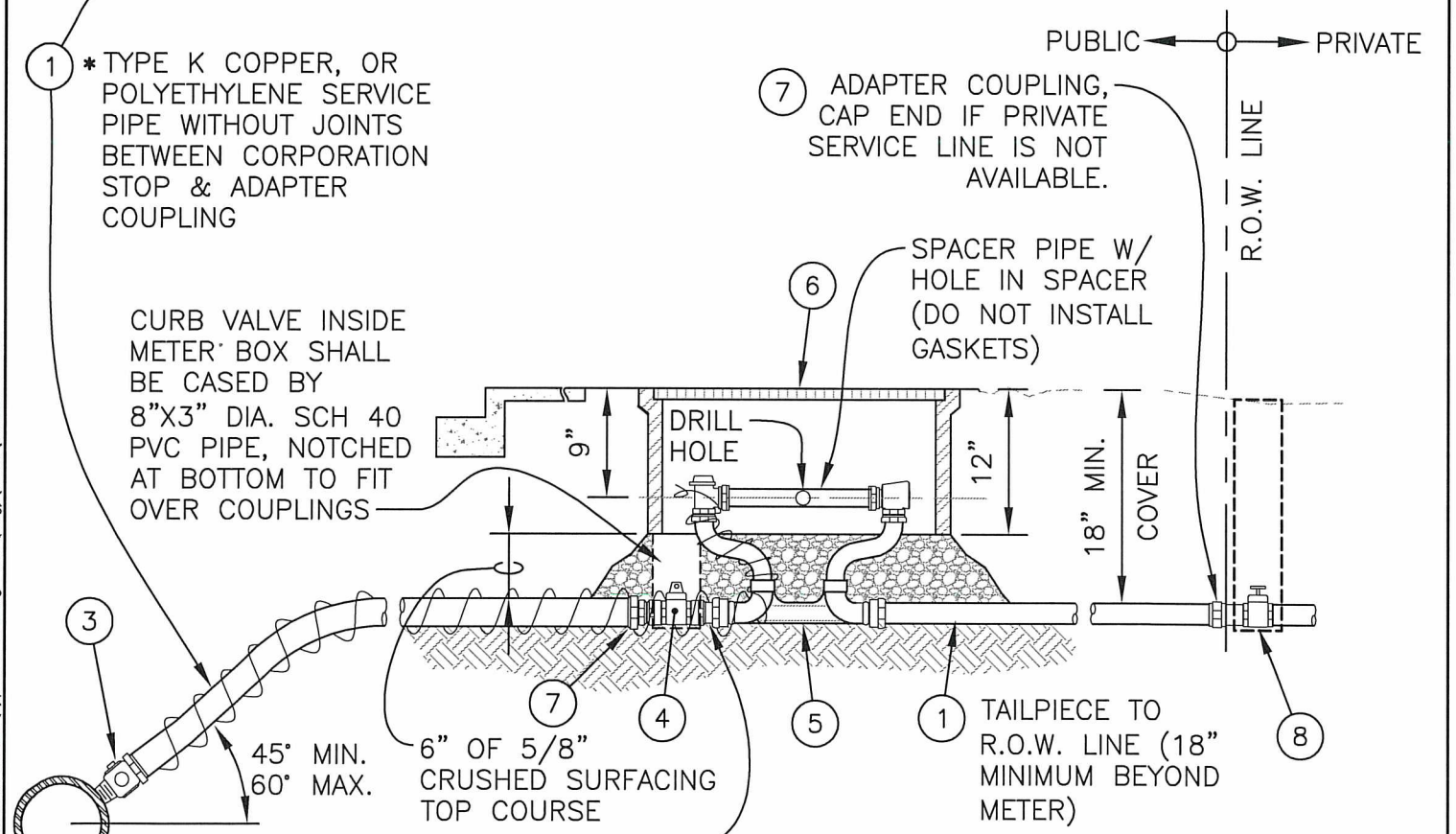

ELEVATION

NOTES:

1. SEE STANDARD DETAIL W–15 FOR MATERIAL SCHEDULE.
2. ALL DOMESTIC SERVICE LINES FROM THE WATER MAIN TO THE ADAPTER COUPLING, STRAIGHT COUPLING, OR CURB VALVE, SHALL BE A MINIMUM OF 1" IN DIAMETER.
3. METER PROVIDED BY CITY, CONNECTIONS MADE FROM EXISTING WATER MAIN SHALL BE INSTALLED BY THE CITY OF AUBURN AND PAID FOR BY THE APPLICANT OR CONTRACTOR.

* IF 1" POLYETHYLENE IS USED: SERVICE PIPE W/OUT JOINTS BETWEEN CORP. STOP AND CURB VALVE AND WRAPPED W/ #10 INSULATED COPPER TRACER WIRE. ATTACH BARE TRACER WIRE TO CORP. STOP AND WRAP IT AROUND THE HDPE PIPE AND METER SETTER AS SHOWN W/ HIGH TORQUE SMOOTH STAINLESS STEEL HOSE CLAMPS. A MINIMUM OF 8" BARE WIRE SHALL PROTRUDE PAST CLAMP AT THE METER SETTER

APPROVED BY CITY ENGINEER:	DATE:	CITY OF AUBURN WASHINGTON	1" WATER METER INSTALLATION
	8/5/2016		
COMMUNITY DEVELOPMENT & PUBLIC WORKS DEPT.			STANDARD DETAIL: W–13.1

Plotted by: Craig Dobyns on 7/13/2016 File location: M:\Construction Standard Details\Approved Drawing Files (dwg)\Water\STDETL-W-13.1

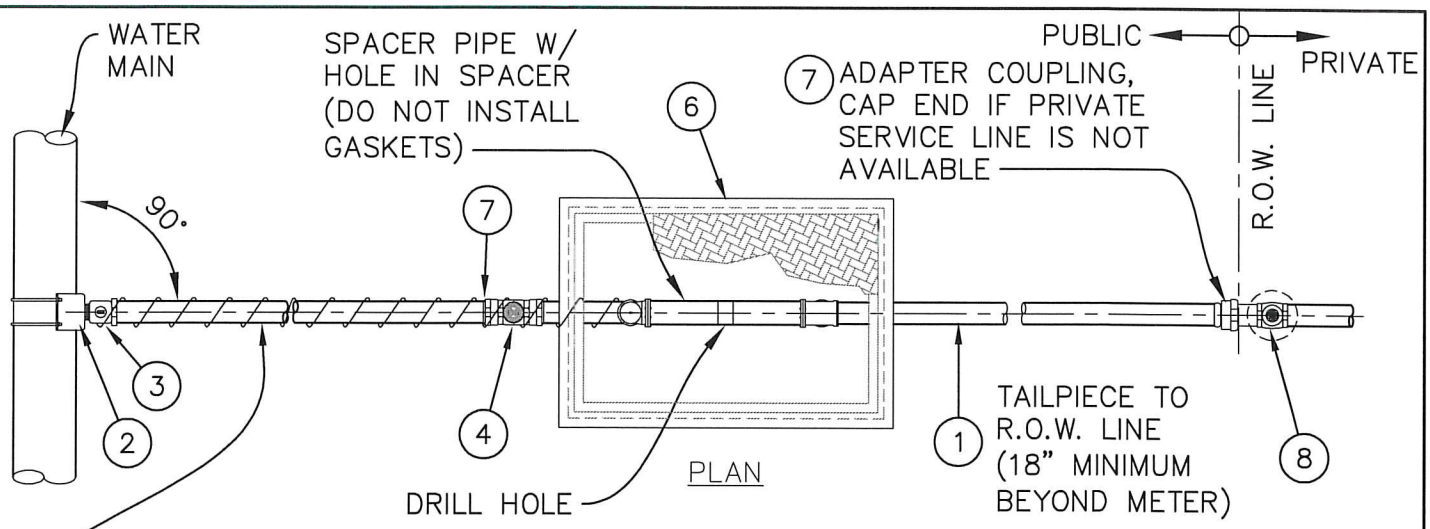

1 SERVICE PIPE W/OUT JOINTS BETWEEN CORP. STOP AND CURB VALVE AND WRAPPED W/ #10 INSULATED COPPER TRACER WIRE. ATTACH BARE TRACER WIRE TO CORP. STOP AND WRAP IT AROUND THE HDPE PIPE AND METER SETTER AS SHOWN W/ HIGH TORQUE SMOOTH STAINLESS STEEL HOSE CLAMPS. A MINIMUM OF 8" BARE WIRE SHALL PROTRUDE PAST CLAMP AT THE METER SETTER

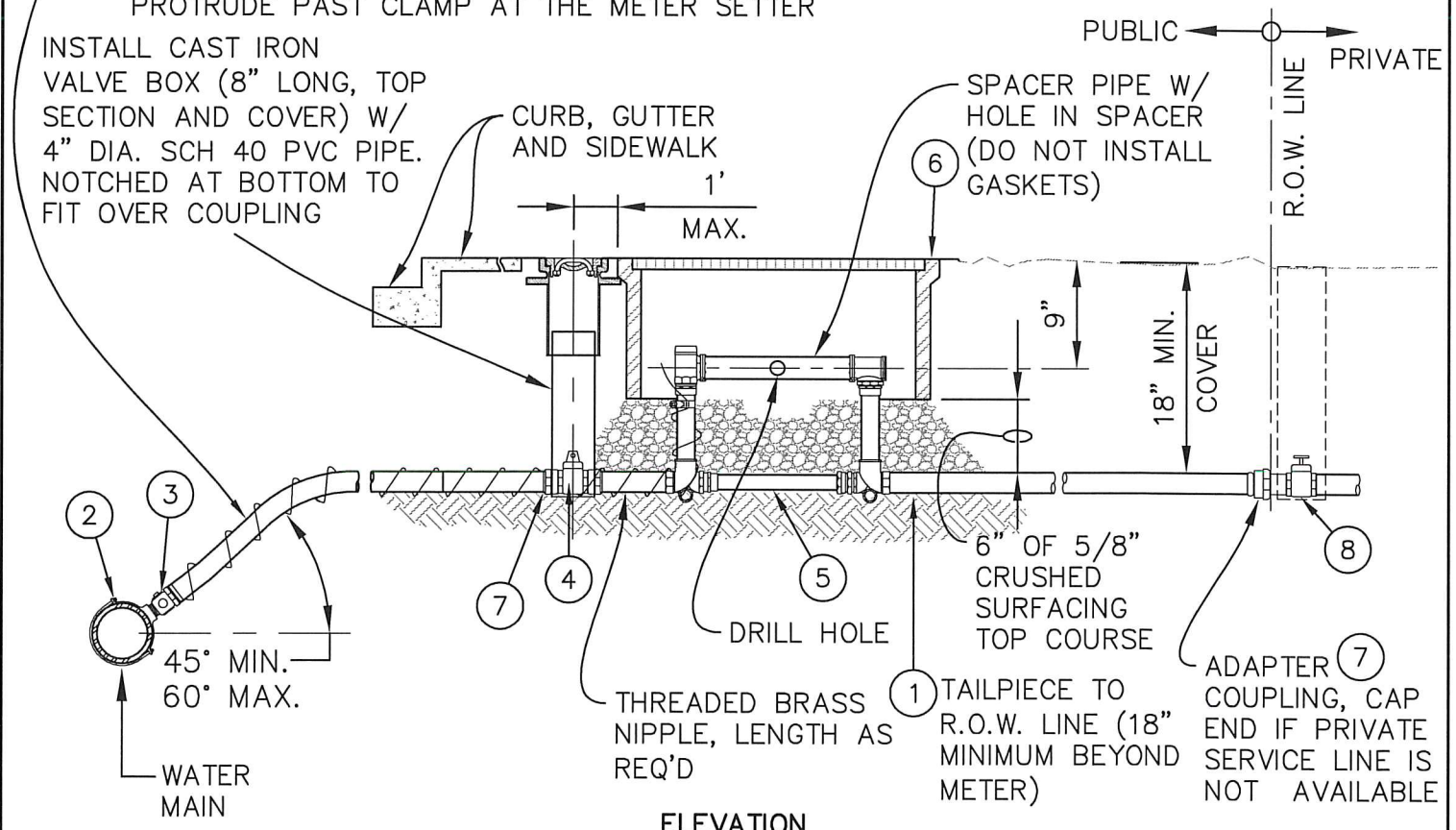

ELEVATION

NOTES:

1. SEE STANDARD DETAIL W-15 FOR MATERIAL SCHEDULE.
2. ALL DOMESTIC SERVICE LINES FROM THE WATER MAIN TO THE ADAPTER COUPLING, STRAIGHT COUPLING, OR CURB VALVE, SHALL BE A MINIMUM OF 1" IN DIAMETER.
3. METER PROVIDED BY CITY, CONNECTIONS MADE FROM EXISTING WATER MAIN SHALL BE INSTALLED BY THE CITY OF AUBURN AND PAID FOR BY THE APPLICANT OR CONTRACTOR.

APPROVED BY CITY ENGINEER:	DATE:	CITY OF AUBURN WASHINGTON	1 1/2" & 2" WATER METER INSTALLATION
COMMUNITY DEVELOPMENT & PUBLIC WORKS DEPT.			STANDARD DETAIL: W-14.1

Plotted by: Craig Dobyns on 7/13/2016 File location: M:\Construction Standard Details\Approved Drawing Files (dwg)\Water\STDETL-W-14.1

WATER SERVICE MATERIAL SCHEDULE

(1) THE CITY OF AUBURN ALLOWS 1-1/2" TO 2" POLYETHYLENE SDR-9 (IN COPPER TUBE SIZES) W/ STAINLESS STEEL LINERS IN ALL COUPLINGS & WRAPPED W/ A #10 INSULATED COPPER TRACER WIRE. FOR 1" COPPER, IT SHALL BE TYPE K COPPER TUBING W/OUT TRACER WIRE FOR WATER SERVICE & TAILPIECE CONNECTION, IN ACCORDANCE W/ STANDARD SPECIFICATION SECTION 9-30.6(3). ALL CONNECTIONS TO POLYETHYLENE OR COPPER TUBING SHALL BE W/ MUELLER 110 COMPRESSION CONNECTIONS OR EQUAL. TAILPIECE SHALL EXTEND TO R.O.W. LINE (18" MINIMUM BEYOND METER) & SHALL BE THE SAME SIZE AS THE SERVICE LINE.

(2) SADDLES FOR 1-1/2" OR 2" PIPE TAPS SHALL BE EPOXY COATED OR E-COATED DUCTILE IRON W/ DOUBLE STAINLESS STEEL STRAPS & NEOPRENE GASKETS. SADDLES SHALL HAVE I.P.S. FEMALE THREADS.

(8) CONTRACTOR SHALL FURNISH & INSTALL PRIVATE SERVICE LINE SHUT-OFF VALVE & RISER. FOR CAPITAL PROJECTS, SEE CONTRACT DOCUMENTS, OTHERWISE PROPERTY OWNER TO INSTALL PRIVATE SERVICE LINE SHUT-OFF VALVE AT POINT OF CONNECTION.

METER LOCATIONS:

1) WHERE LANDSCAPE STRIPS ARE PLANNED OR EXIST, THE METER & METER BOX WILL BE PLACED BETWEEN THE BACK OF THE CURB & THE SIDEWALK, ADJACENT TO THE SIDEWALK IF ROOM PERMITS;

2) WHERE THE SIDEWALK IS LOCATED ADJACENT TO THE BACK OF THE CURB OR THE LANDSCAPE STRIP IS TOO NARROW TO ACCOMMODATE THE METER BOX, THE METER & METER BOX WILL BE PLACED ADJACENT TO & AT THE BACK OF SIDEWALK;

3) WHERE METERS & METER BOXES ARE LOCATED IN THE STREET OR SIDEWALK OR IN LOCATIONS WHICH ARE SUBJECTED TO VEHICULAR TRAFFIC, INCLUDING DRIVEWAYS, ETC., A TRAFFIC BEARING METER BOX & LID OF APPROPRIATE LOAD RATING SHALL BE PROVIDED AS SPECIFIED (EAST JORDAN IRON WORKS, OR EQUAL).

4) LOCATE CURB VALVE IN THE METER BOX WHERE POSSIBLE & 1 FT. OUTSIDE IF NO ROOM INSIDE METER BOX IS AVAILABLE.

5) OFF STREET METER LOCATION SHALL BE APPROVED BY THE CITY.

SCHEDULE NO. & PART	SERVICE LINE SIZE & MUELLER/FORD CATALOG NO. OR APPROVED EQUAL		
	1"	1-1/2"	2"
(3) CORP. STOP	DIRECT TAP OPTION: MUELLER B-25008N OR FORD FB1000-4-Q-NL SADDLE OPTION: MUELLER B-20013N W/ H-15451N OUTLET COUPLING OR FORD FB500-4NL W/ C14-44-Q-NL OUTLET COUPLING	MUELLER B-2969N W/ H-15451N OUTLET COUPLING OR FORD FB500-6-NL W/ C14-66-Q-NL OUTLET COUPLING	MUELLER B-2969N W/ H-15451N OUTLET COUPLING OR FORD FB500-7-NL W/ C14-77-Q-NL OUTLET COUPLING
(4) CURB VALVE	MUELLER B-20200N OR FORD B11-444W-NL	MUELLER B-20200N OR FORD B11-666W-NL	MUELLER B-20200N OR FORD B11-777W-NL
(5) METER YOKE	MUELLER B-2404R-2N W/ H-14222N INLET & H-14227N OUTLET COUPLINGS, 12" RISER	MUELLER B-2423-2N W/ H-15428N OUTLET COUPLING OR FORD VBHH76-12BHC-11-66-NL W/ C84-66-Q-NL OUTLET COUPLING, 12" RISER	MUELLER B-2423-2N W/ H-15428N OUTLET COUPLING OR FORD VBHH77-12BHC-11-77-NL W/ C84-77-Q-NL OUTLET COUPLING, 12" RISER
(6) METER BOX	HUBBELL QUAZITE 13"x24"x12" POLYMER CONCRETE BOX & COVER W/ READER LID & 2" AMR PORT	HUBBELL QUAZITE 17"x30"x12" POLYMER CONCRETE BOX & COVER W/ READER LID & 2" AMR PORT	
(7) COUPLING	MUELLER H-15428N OR FORD C84-44-Q-NL	MUELLER H-15428N OR FORD C84-66-Q-NL	MUELLER H-15428N OR FORD C84-77-Q-NL
(8) SHUT-OFF VALVE	MUELLER B-20200N W/ B-20298-99000 LEVER HANDLE, W/ 8" IRRIGATION BOX AND 6" PVC RISER		

APPROVED BY CITY ENGINEER: DATE: 8/5/2016

CITY OF AUBURN WASHINGTON

WATER METER LOCATION & MATERIAL SCHEDULE

COMMUNITY DEVELOPMENT & PUBLIC WORKS DEPT. STANDARD DETAIL: W-15.1

Plotted by: Craig Dobyne on 7/13/2016 File location: M:\Construction Standard Details\Approved Drawing Files (dwg)\Water\STDETL-W-15.1

METER SIZE	MAIN LINE	BYPASS	METER LENGTH FLG. TO FLG.
3"	3" D.I.P.	3" D.I.P.	17"
4"	4" D.I.P.	4" D.I.P.	20"
6"	6" D.I.P.	6" D.I.P.	24"
8"	8" D.I.P.	8" D.I.P.	30 1/8"
10"	10" D.I.P.	10" D.I.P.	41 7/8"

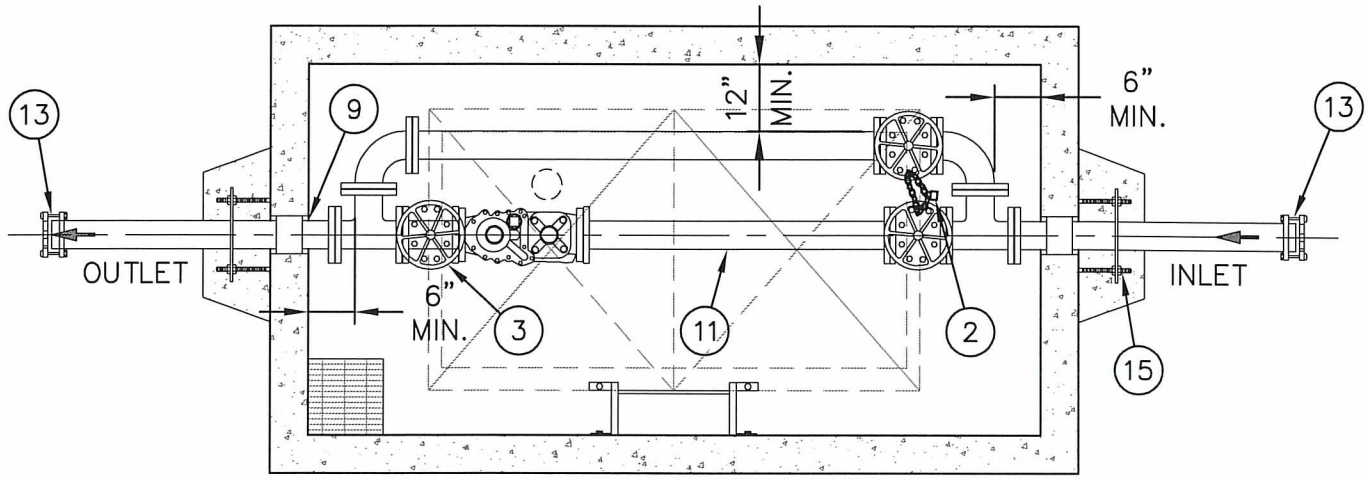

PLAN

NTS

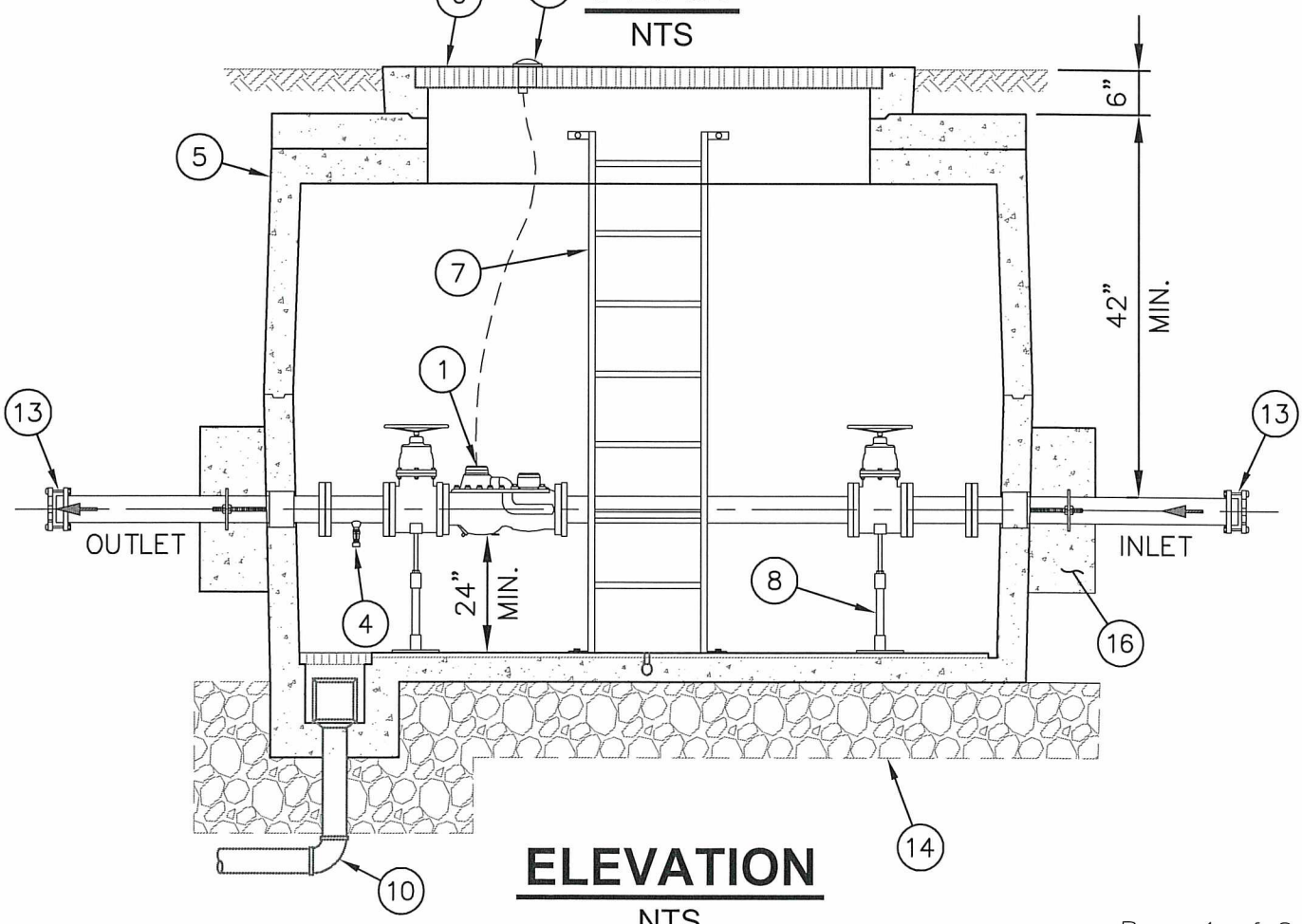

ELEVATION

NTS

APPROVED BY CITY ENGINEER: DATE: 8/5/2016

CITY OF AUBURN WASHINGTON

3" OR LARGER WATER METER INSTALLATION

COMMUNITY DEVELOPMENT & PUBLIC WORKS DEPT. STANDARD DETAIL: W-16.1

Plotted by: Craig Dobyns on 7/13/2016 File location: M:\Construction Standard Details\Approved Drawing Files (dwg)\Water\STDETL-W-16.1

BILL OF MATERIALS

Part Number	Quantity	Description
1	1	METER PROVIDED BY CITY FOR CONTRACTOR INSTALLATION: SENSUS OMNI C2 COMPOUND METER OR APPROVED EQUAL FLANGED WITH BUILT-IN STRAINER AND ENCODERS COMPATIBLE WITH CURRENT SENSUS AMR/AMI SYSTEM.
2	1	LOCK WITH CHAINS.
3	3	AWWA C-509 OR C-515 GATE VALVE COMPLETE WITH HAND WHEEL.
4	1	3/4" HOSE BIB COMPLETE WITH VACUUM BREAKER
5	1	PRECAST CONCRETE VAULT COMPLETE WITH COLLAR, C555 BLACK EXTERIOR DAMPPROOFING, C555 WHITE INTERIOR PAINT
6	1	36"x72" ALUMINUM HATCH H20-44 CLASS B, STATIC LOADING
7	1	O.S.H.A. APPROVED SAFETY LADDER, IF VAULT IS OVER 30" DEEP
8	2	GALVANIZED STEEL ADJUSTABLE PIPE SUPPORT
9	2	PIPE SEAL ASSEMBLY
10	1	SUMP DRAIN, CONNECT TO CITY STORM SYSTEM, IF GRAVITY DRAIN IS NOT FEASIBLE, A SUMP PUMP WITH CHECK VALVE ON DISCHARGE LINE IS REQUIRED
11	1	SPOOL, LENGTH AS REQUIRED AND PER METER MANUFACTURER REQUIREMENTS
12	1	2" AMR PORT
13	2	SMITH BLAIR OR EBAA TRANSITION COUPLINGS
14	AS REQ'D	5/8" MINUS CRUSHED ROCK FOUNDATION WITH COMPACTED DEPTH OF 12" MINIMUM
15	2	THRUST SEAL PLATE C/W ANCHORING BOLTS
16	2	REINFORCED CONCRETE THRUST BLOCKS

STANDARD FABRICATION & FINISHING SPECIFICATION

1) ALL STEEL PIPE SHALL BE SANDBLASTED, EPOXY LINED AND COATED TO AWWA C-120 AND NSF-61 SPECIFICATIONS. FINISH COATING SHALL BE BLUE ENAMEL.
2) GATE VALVE ON THE BYPASS SHALL BE NORMALLY CLOSED AND LOCKED WITH THE GATE VALVE ON THE MAIN LINE AS SHOWN AND KEYS GIVEN TO THE CITY.
3) DUCTILE IRON PIPE SHALL BE ACCORDING TO 9-30.1(1) OF THE STANDARD SPECIFICATIONS.

APPROVED BY CITY ENGINEER: DATE: 8/5/2016

CITY OF AUBURN WASHINGTON

3" OR LARGER WATER METER INSTALLATION

COMMUNITY DEVELOPMENT & PUBLIC WORKS DEPT. STANDARD DETAIL: W-16a.1

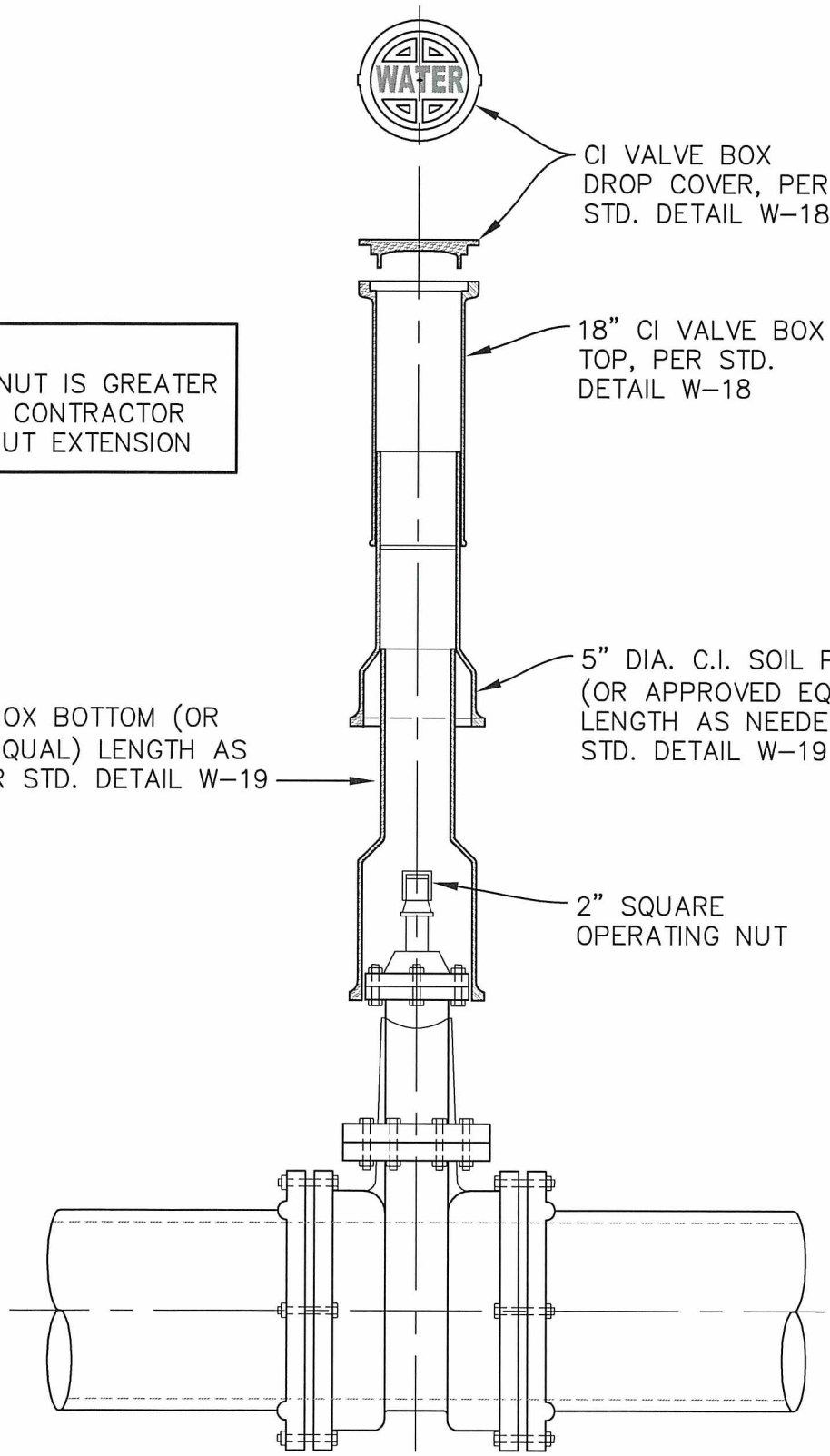

NOTE:
IF DEPTH OF NUT IS GREATER THAN 7 FEET, CONTRACTOR TO PROVIDE NUT EXTENSION

APPROVED BY CITY ENGINEER:	DATE: 8/5/2016	CITY OF AUBURN WASHINGTON	VALVE WRENCH EXTENSION BOX
COMMUNITY DEVELOPMENT & PUBLIC WORKS DEPT.			STANDARD DETAIL: W-17.1

Plotted by: Craig Dobyns on 7/13/2016 File location: M:\Construction Standard Details\Approved Drawing Files (dwg)\Water\STDETL-W-17.1

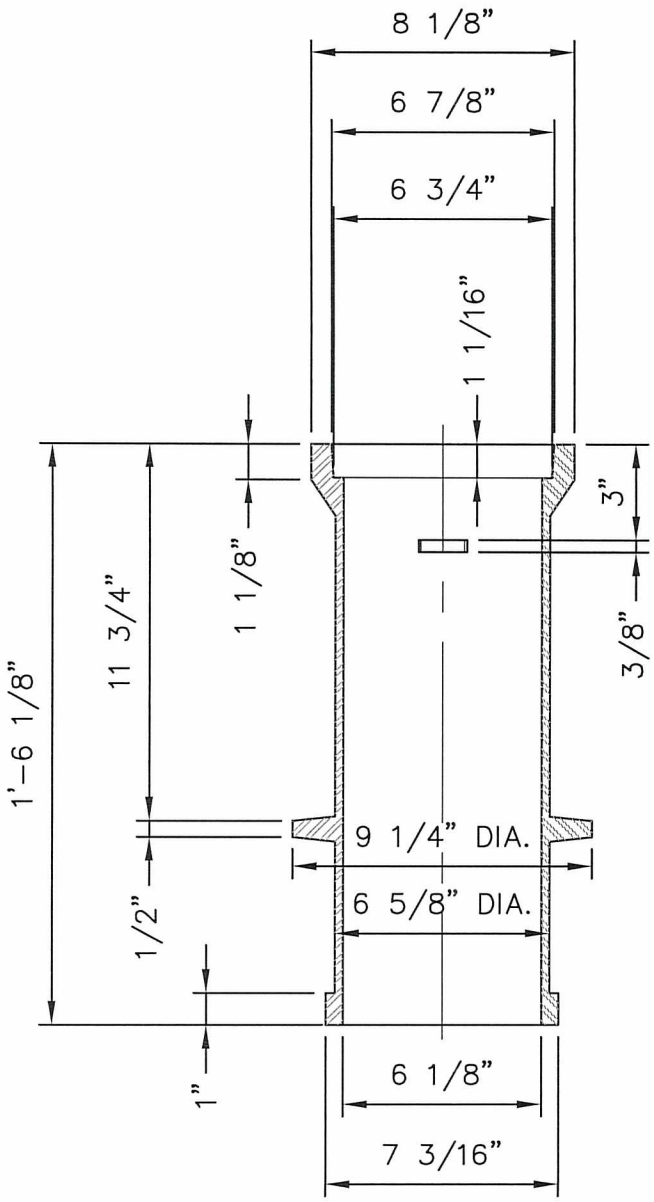

OLYMPIC FOUNDARY, INC.,
C.I.18" VALVE BOX TOP
AND COVER
NOT TO SCALE

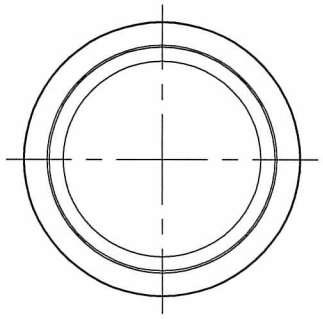

TOP VIEW

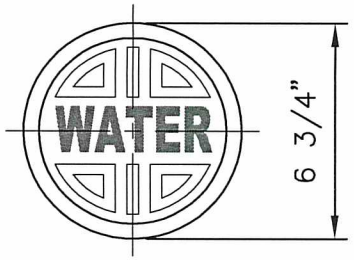

TOP VIEW

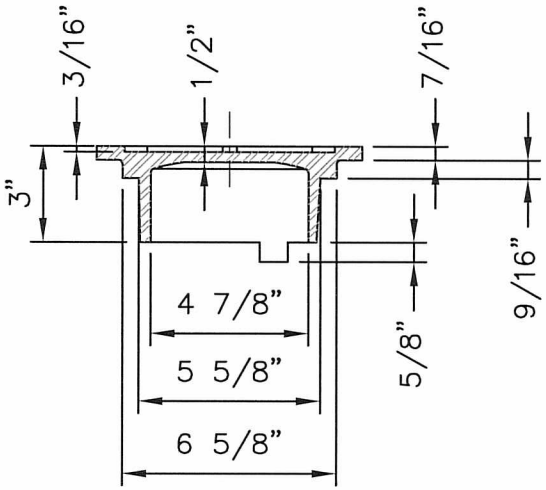

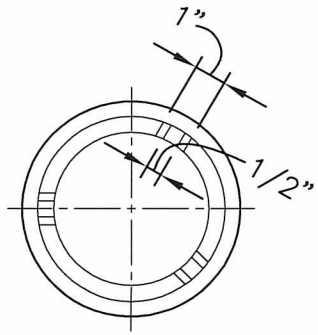

BOTTOM VIEW

VALVE BOX DROP
COVER (DEEP SKIRT)
NOT TO SCALE

APPROVED BY CITY ENGINEER:

DATE: 8/5/2016

CITY OF AUBURN WASHINGTON

C.I. VALVE BOX TOP &
VALVE BOX COVER

COMMUNITY DEVELOPMENT & PUBLIC WORKS DEPT.

STANDARD DETAIL: W-18.1

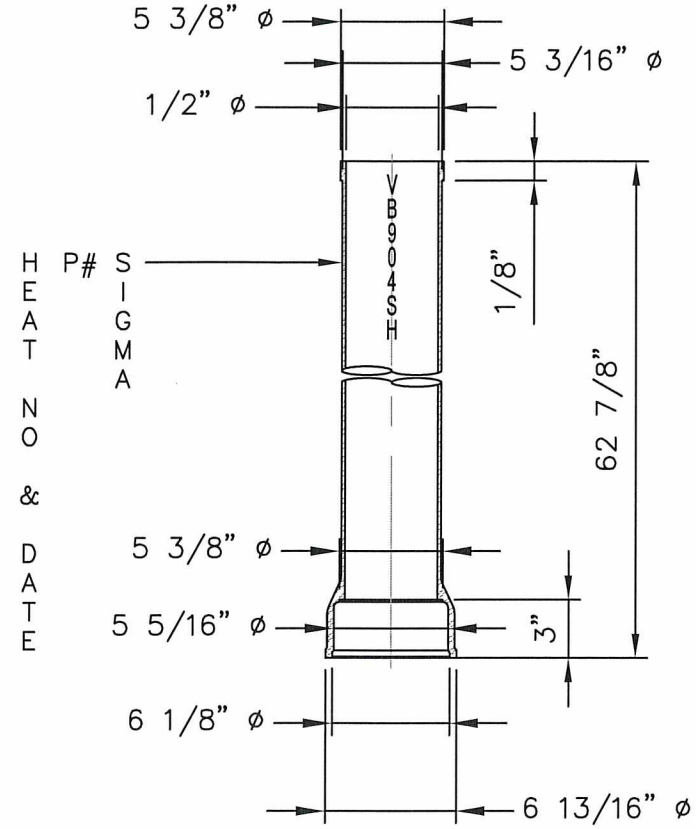

SINGLE HUB 5" C.I. SOIL PIPE VALVE BOX EXTENSION

NOT TO SCALE

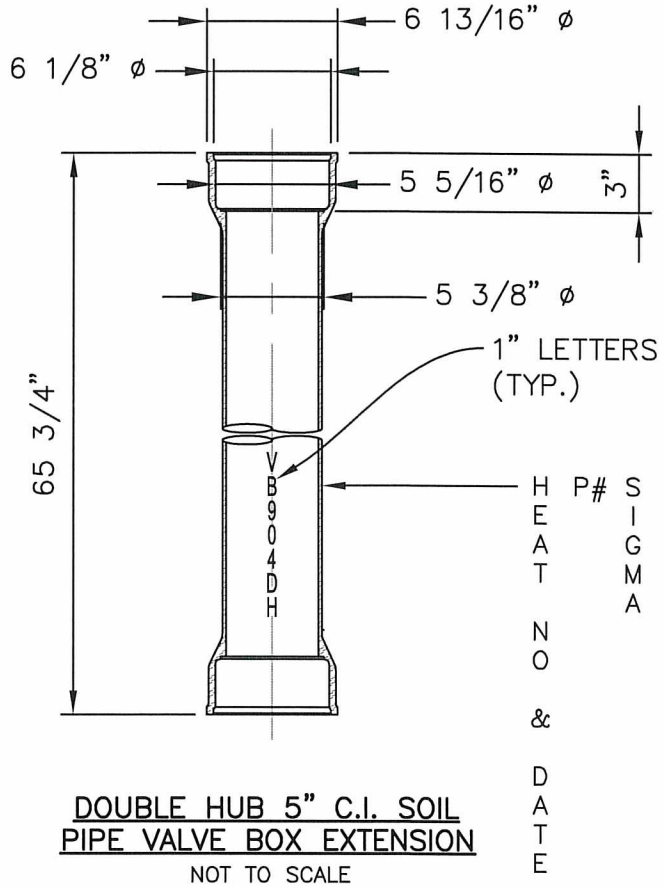

DOUBLE HUB 5" C.I. SOIL PIPE VALVE BOX EXTENSION

NOT TO SCALE

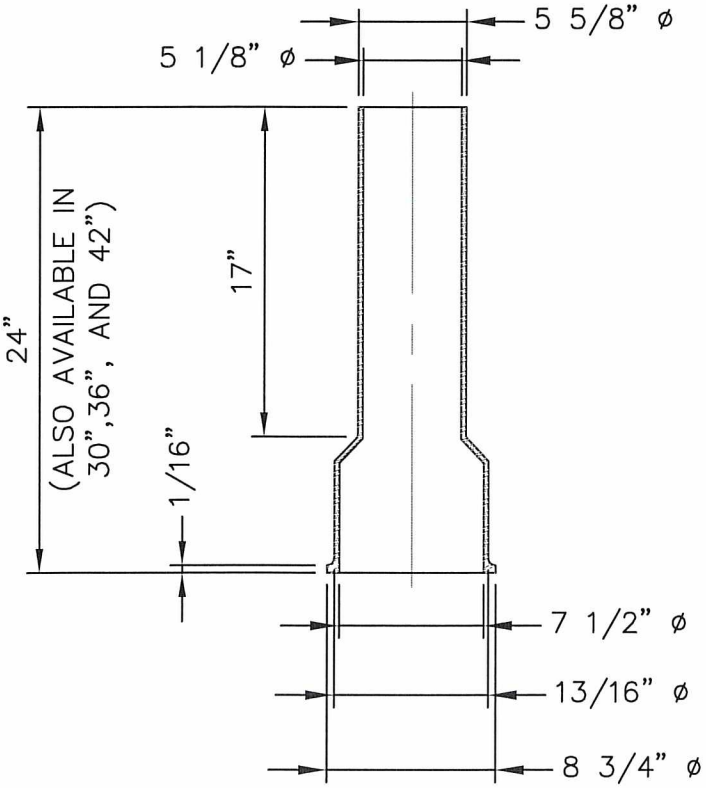

C.I. VALVE BOX BOTTOM

NOT TO SCALE

APPROVED BY CITY ENGINEER:	DATE: 8/5/2016	CITY OF AUBURN WASHINGTON	5" C.I. SOIL PIPE VALVE BOX EXTENSION & C.I. VALVE BOX BOTTOM
COMMUNITY DEVELOPMENT & PUBLIC WORKS DEPT.			STANDARD DETAIL: W-19.1

Plotted by: Craig Dobyns on 7/13/2016 File location: M:\Construction Standard Details\Approved Drawing Files (dwg)\Water\STDETL-W-19.1

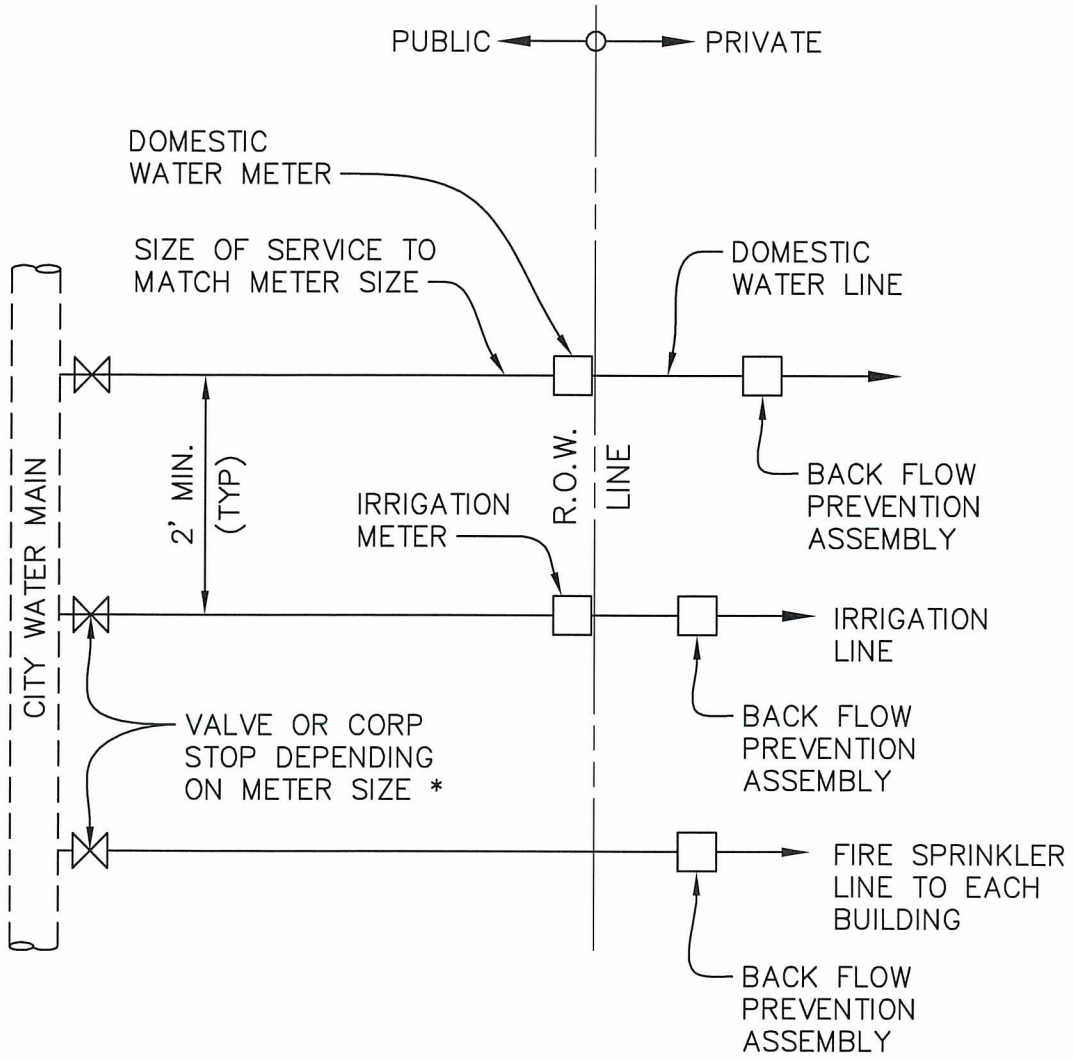

NOTES:

1. ABOVE DESIGN APPLICABLE TO NON-SINGLE FAMILY.
2. CONNECTION TO CITY WATER MAIN PER CITY OF AUBURN REQUIREMENTS.
3. BACK FLOW ASSEMBLY IS REQUIRED ON FIRE SPRINKLER, DOMESTIC, & IRRIGATION LINES. TYPE OF ASSEMBLY MUST BE COMMENSURATE WITH DEGREE OF HAZARD.
4. PLANS FOR SEPARATE FIRE SPRINKLER LINE MUST BE SUBMITTED & APPROVED BY THE FIRE MARSHAL PRIOR TO INSTALLATION. IT SHALL BE DESIGNED BY A FIRE PROTECTION ENGINEER.
5. LOW HAZARD SERVICES REQUIRE DOUBLE CHECK VALVE ASSEMBLY, HIGH HAZARD SERVICES REQUIRE REDUCED PRESSURE BACK FLOW ASSEMBLY.
6. FOR LIST OF LOW & HIGH HAZARD SERVICES, CONTACT THE CITY OF AUBURN'S CROSS CONNECTION SPECIALIST.

* FOR METERS 2" OR LESS USE CORP STOP & FOR METERS LARGER THAN 2" USE GATE VALVE WITH 2" STANDARD OPERATING NUT & COA VALVE BOX TO SURFACE.

APPROVED BY CITY ENGINEER:	DATE: 8/5/2016	CITY OF AUBURN WASHINGTON	NON-SINGLE FAMILY SERVICE LINES
COMMUNITY DEVELOPMENT & PUBLIC WORKS DEPT.			STANDARD DETAIL: W-20.1

Plotted by: Craig Dobyns on 7/13/2016 File location: M:\Construction Standard Details\Approved Drawing Files (dwg)\Water\STDETL-W-20.1

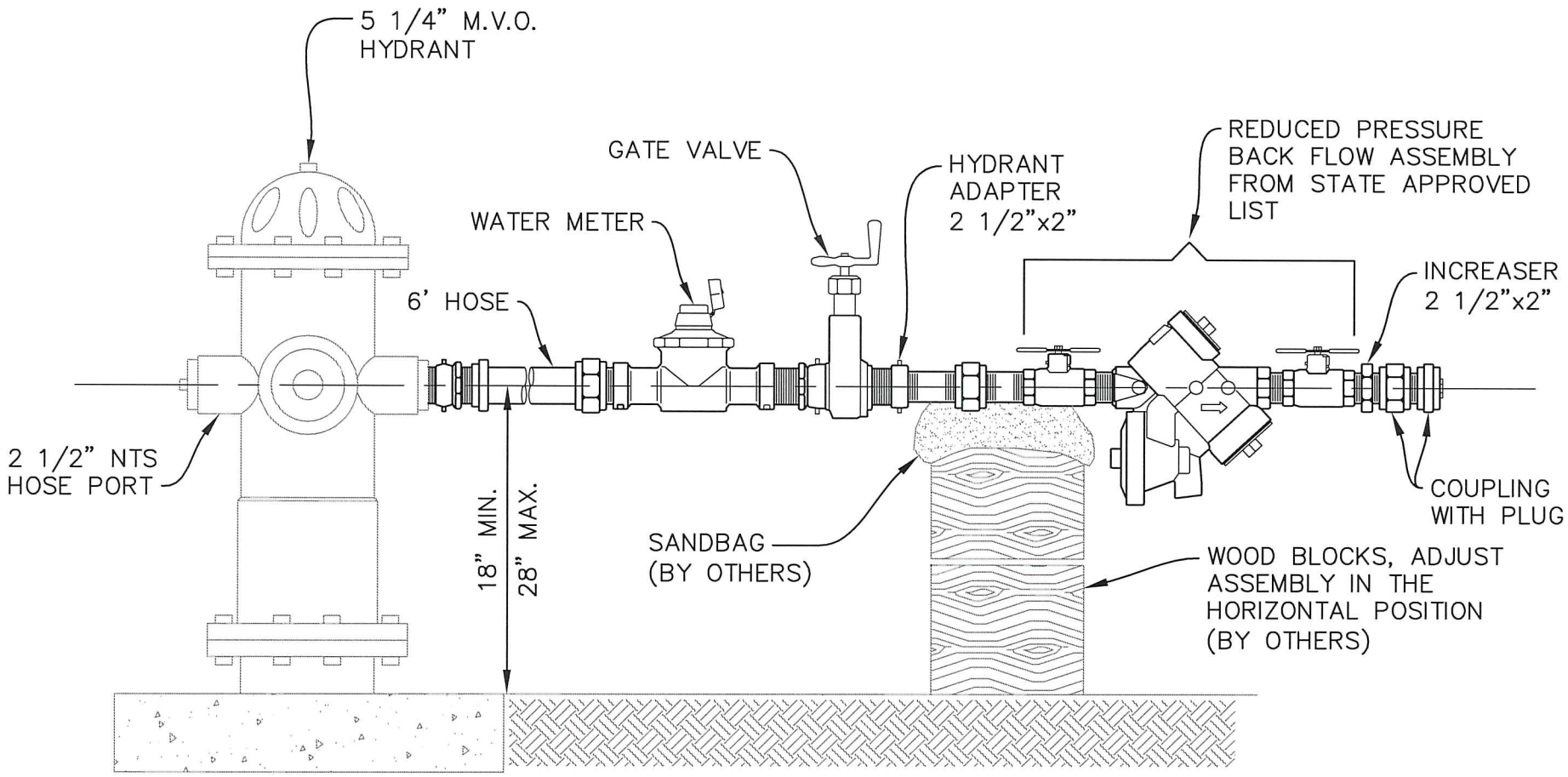

APPROVED BY CITY ENGINEER: [signature] DATE: 8/5/2016

CITY OF AUBURN WASHINGTON

TEMP. COMBINATION HYDRANT METER/
REDUCED PRESSURE BACKFLOW ASSY.

COMMUNITY DEVELOPMENT & PUBLIC WORKS DEPT. STANDARD DETAIL: W-21.1

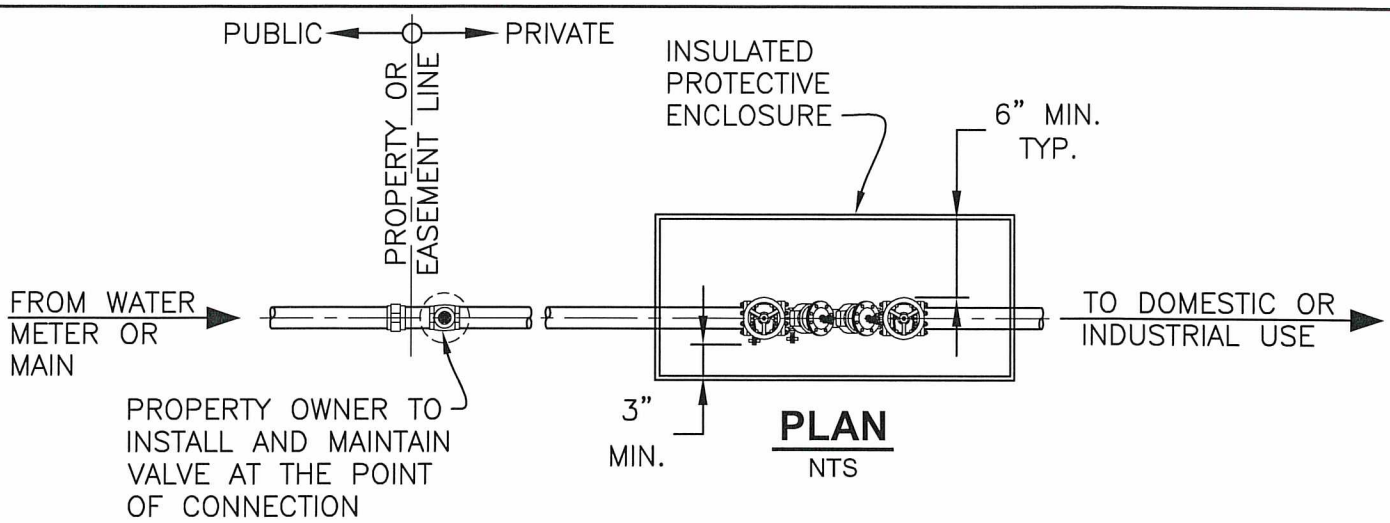

PLAN
NTS

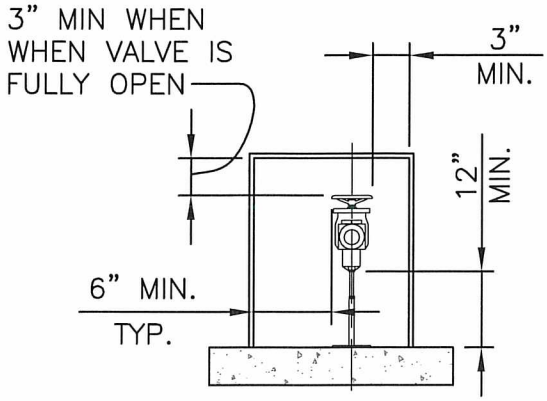

SECTION
NTS

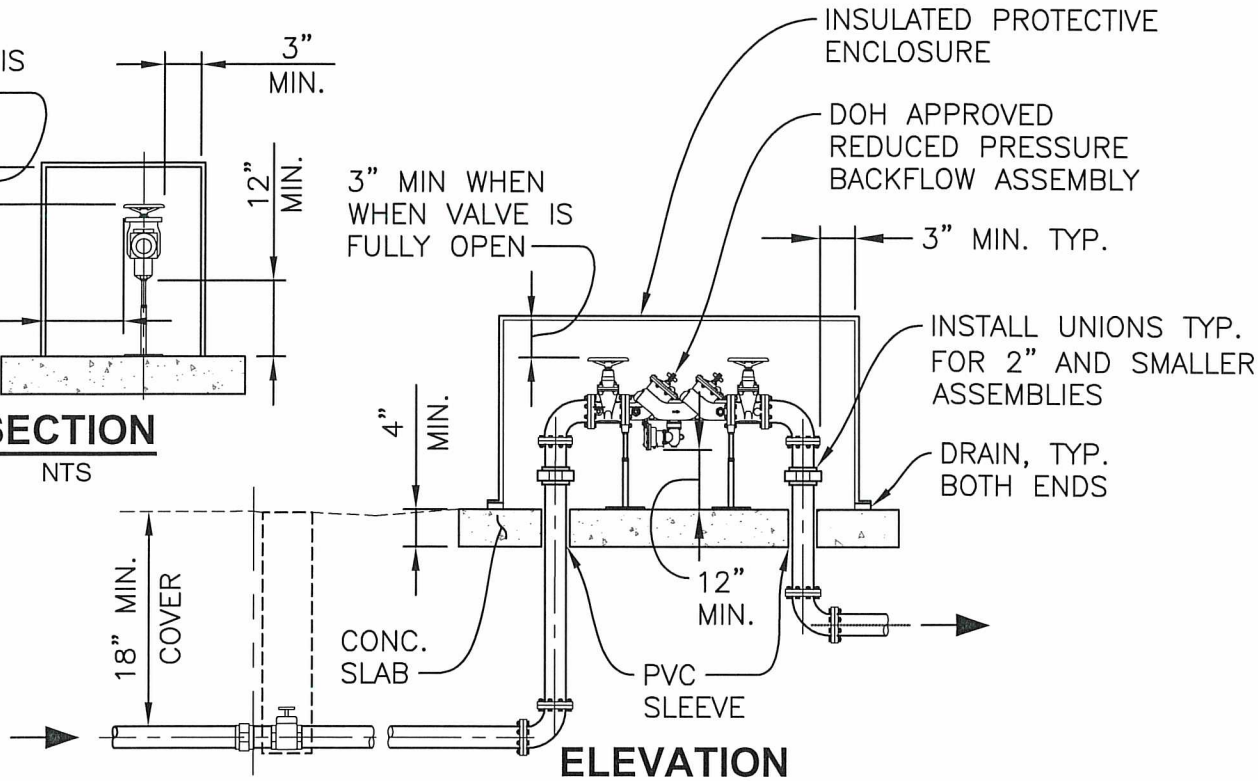

ELEVATION
NTS

NOTES:

1. INSULATED PROTECTIVE ENCLOSURE MUST COMPLY WITH THE AMERICAN SOCIETY OF SANITARY ENGINEERING (ASSE) 1060 OUTDOOR ENCLOSURES FOR BACKFLOW PREVENTION ASSEMBLIES. IT SHALL BE LOCKABLE WITH A KEY LOCK OR PADLOCK AND SHALL ALLOW FOR MINIMUM CLEARANCES AND PROVIDE ADEQUATE DRAINAGE.
2. RPBA SHALL BE INSTALLED ADJACENT TO THE METER AND HAVE NO BRANCH CONNECTION BETWEEN THE METER AND THE BACKFLOW ASSEMBLY.
3. BACKFLOW ASSEMBLY MUST BE APPROVED FOR USE IN WASHINGTON STATE BY THE DEPARTMENT OF HEALTH (DOH). IT MUST BE TESTED BY A STATE CERTIFIED "BAT" AT THE TIME OF INSTALLATION, ANNUALLY, AFTER THE ASSEMBLY IS REPAIRED, MOVED OR AFTER AN INCIDENT AT OWNER'S EXPENSE.
4. BACKFLOW ASSEMBLY SHALL BE PURCHASED AND INSTALLED AS A UNIT, AS SHIPPED BY THE MANUFACTURER, WITH NO MODIFICATIONS TO ANY PART OF THE ASSEMBLY.
5. A MINIMUM OF TWO SUPPORTS MUST FIRMLY ANCHOR THE ASSEMBLY.

APPROVED BY CITY ENGINEER:	DATE: 8/5/2016	CITY OF AUBURN WASHINGTON	REDUCED PRESSURE BACKFLOW ASSY. (OUTSIDE INSTALLATION)
COMMUNITY DEVELOPMENT & PUBLIC WORKS DEPT.			STANDARD DETAIL: W-22.1

Plotted by: Craig Dobyns on 7/13/2016 File location: M:\Construction Standard Details\Approved Drawing Files (dwg)\Water\STDETL-W-22.1

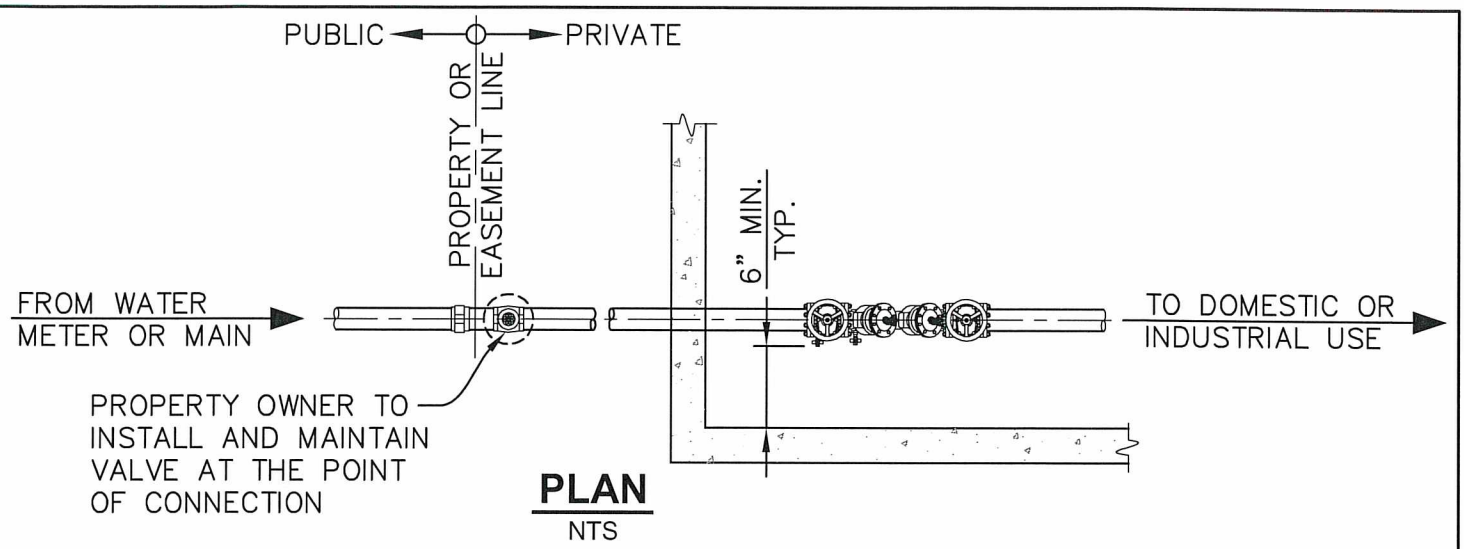

PLAN
NTS

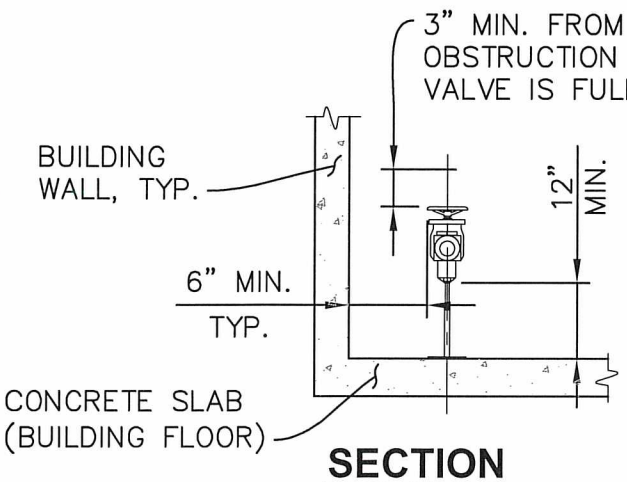

SECTION
NTS

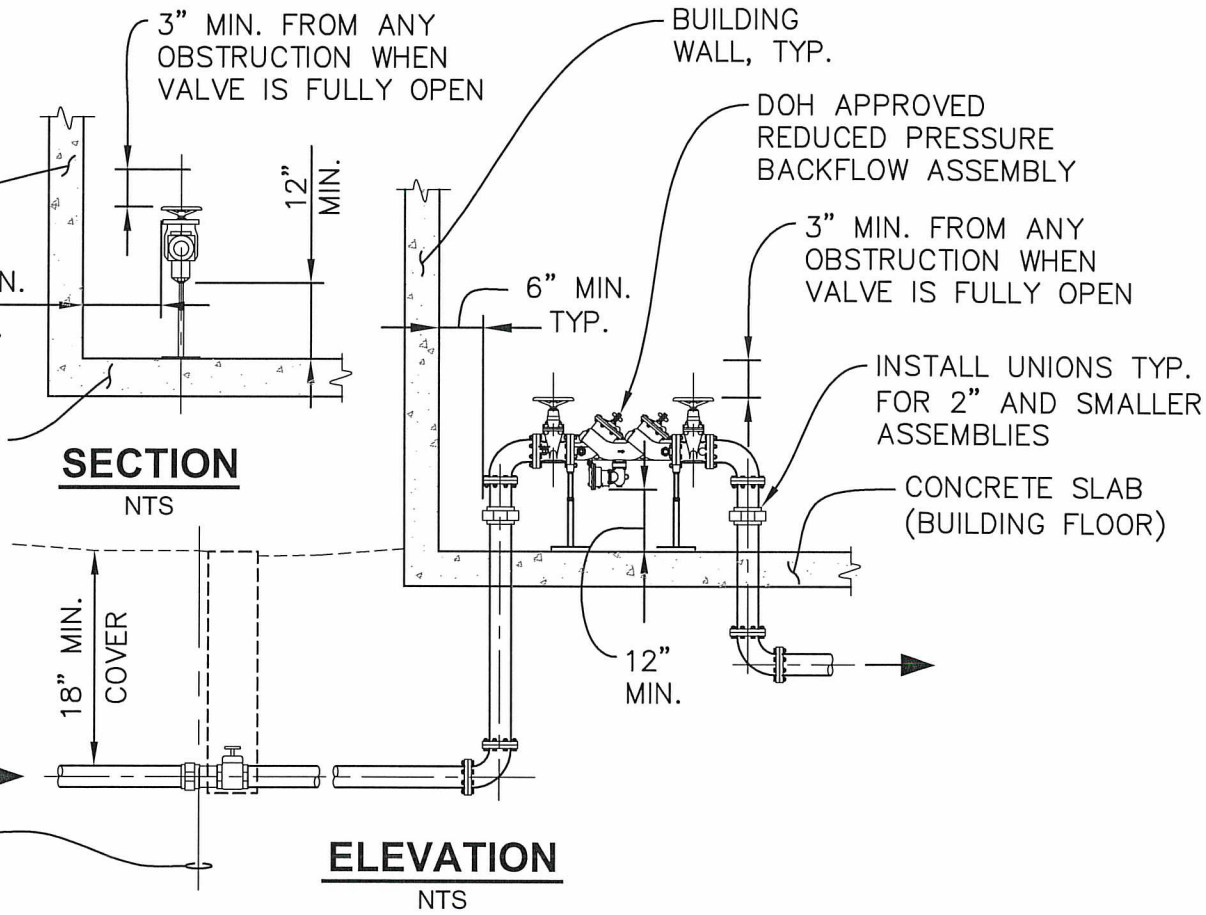

ELEVATION
NTS

NOTES:

1. RPBA INSTALLED INSIDE BUILDING SHALL HAVE NO BRANCH CONNECTIONS BETWEEN THE METER AND THE BACKFLOW ASSEMBLY.
2. BACKFLOW ASSEMBLY MUST BE APPROVED FOR USE IN WASHINGTON STATE BY THE DEPARTMENT OF HEALTH (DOH). IT MUST BE TESTED BY A STATE CERTIFIED "BAT" AT THE TIME OF INSTALLATION, ANNUALLY, AFTER THE ASSEMBLY IS REPAIRED, MOVED OR AFTER AN INCIDENT AT OWNER'S EXPENSE.
3. BACKFLOW ASSEMBLY SHALL BE PURCHASED AND INSTALLED AS A UNIT, AS SHIPPED BY THE MANUFACTURER, WITH NO MODIFICATIONS TO ANY PART OF THE ASSEMBLY.
4. A MINIMUM OF TWO SUPPORTS MUST FIRMLY ANCHOR THE ASSEMBLY.

APPROVED BY CITY ENGINEER:	DATE:	CITY OF AUBURN WASHINGTON	REDUCED PRESSURE BACKFLOW ASSY. (INSIDE INSTALLATION)
	8/5/2016		
COMMUNITY DEVELOPMENT & PUBLIC WORKS DEPT.			STANDARD DETAIL: W-23.1

Plotted by: Craig Dobyns on 7/13/2016 File location: M:\Construction Standard Details\Approved Drawing Files (dwg)\Water\STDETL-W-23.1

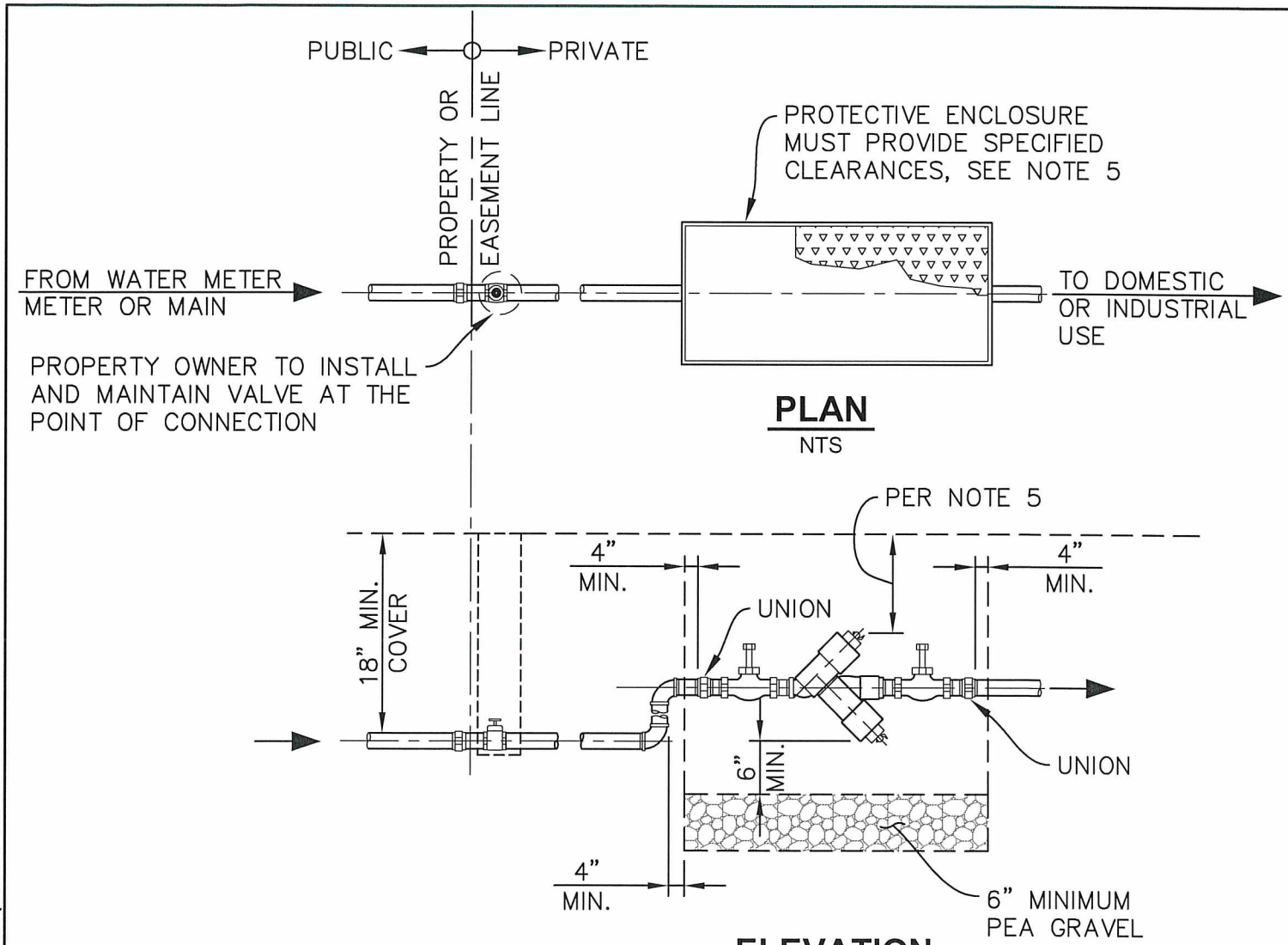

NOTES:

1. BACKFLOW ASSEMBLY MUST HAVE ADEQUATE SPACE CONSIDERATIONS FOR PROPER TESTING AND MAINTENANCE. A MINIMUM OF 12" CLEARANCE FROM ANY OBSTRUCTIONS ON THE TEST SIDE. A MINIMUM OF 6" CLEARANCE BELOW ASSEMBLY AND A MINIMUM OF 6" OF PEA GRAVEL IN THE BOTTOM OF THE BOX. THE MINIMUM CLEARANCE FROM THE TOP OF THE PEA GRAVEL TO THE BOTTOM OF THE ASSEMBLY IS 6".
2. DCVA MUST BE INSTALLED WITH TEST COCKS FACING UP. TEST COCKS MUST BE PLUGGED WITH BRASS OR PLASTIC PLUGS.
3. BACKFLOW ASSEMBLY MUST BE APPROVED FOR USE IN WASHINGTON STATE BY THE DEPARTMENT OF HEALTH (DOH). IT MUST BE TESTED BY A STATE CERTIFIED "BAT" AT THE TIME OF INSTALLATION, ANNUALLY, AFTER THE ASSEMBLY IS REPAIRED, MOVED OR AFTER AN INCIDENT AT OWNER'S EXPENSE.
4. BACKFLOW ASSEMBLY SHALL BE PURCHASED AND INSTALLED AS A UNIT, AS SHIPPED BY THE MANUFACTURER, WITH NO MODIFICATIONS TO ANY PART OF THE ASSEMBLY.
5. MINIMUM CLEARANCE AT ABOVE ASSEMBLY SHALL BE: 9" (FOR 3/4" METER), 12" (FOR 1" METER), AND 14" (FOR 1 1/2" & 2" METER).

APPROVED BY CITY ENGINEER:	DATE: 8/5/2016	CITY OF AUBURN WASHINGTON	DOUBLE CHECK VALVE ASSEMBLY (OUTSIDE INSTALLATION)
COMMUNITY DEVELOPMENT & PUBLIC WORKS DEPT.			STANDARD DETAIL: W-24.1

Plotted by: Craig Dobyns on 7/13/2016 File location: M:\Construction Standard Details\Approved Drawing Files (dwg)\Water\STDETL-W-24.1

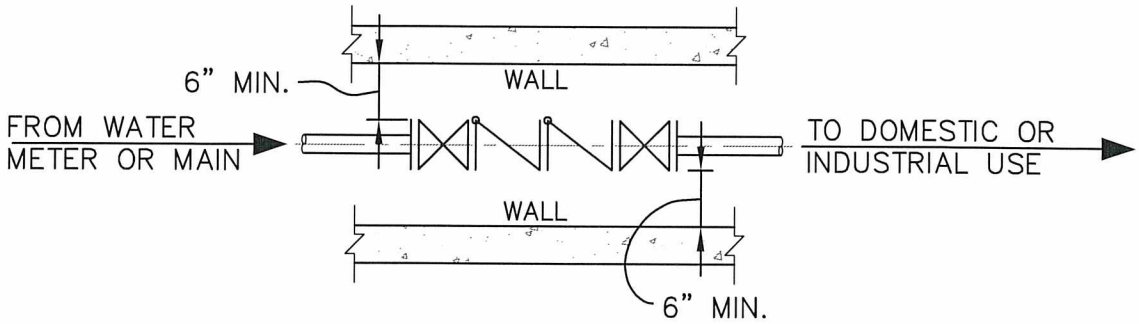

PLAN

NTS

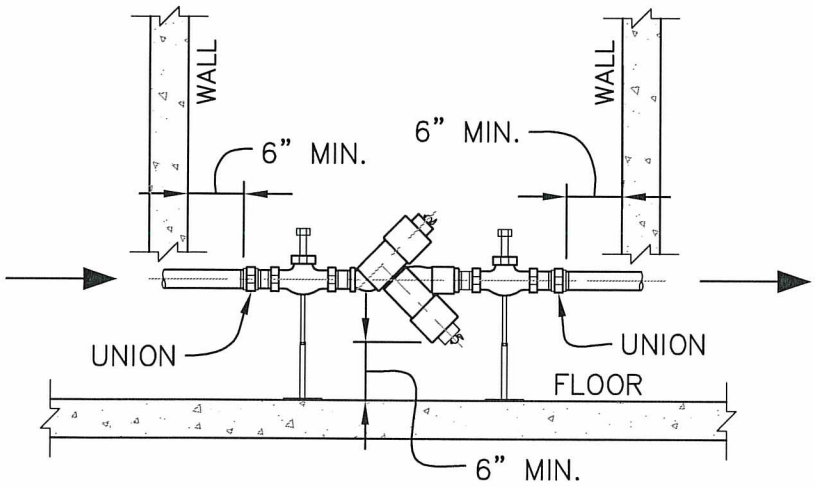

ELEVATION

NTS

NOTES:

1. BACKFLOW ASSEMBLY MUST HAVE ADEQUATE SPACE CONSIDERATIONS FOR PROPER TESTING AND MAINTENANCE. A MINIMUM OF 6" SIDE CLEARANCE BETWEEN DCVA AND WALL OR ANY OBSTRUCTIONS AND A MINIMUM OF 6" CLEARANCE BELOW ASSEMBLY SHALL BE PROVIDED.
2. DCVA MUST BE INSTALLED WITH TEST COCKS FACING UP. TEST COCKS MUST BE PLUGGED WITH BRASS OR PLASTIC PLUGS.
3. DCVA INSTALLED INSIDE BUILDING SHALL HAVE NO BRANCH CONNECTIONS BETWEEN THE METER AND THE BACKFLOW ASSEMBLY.
4. BACKFLOW ASSEMBLY MUST BE APPROVED FOR USE IN WASHINGTON STATE BY THE DEPARTMENT OF HEALTH (DOH). IT MUST BE TESTED BY A STATE CERTIFIED "BAT" AT THE TIME OF INSTALLATION, ANNUALLY, AFTER THE ASSEMBLY IS REPAIRED, MOVED OR AFTER AN INCIDENT AT OWNER'S EXPENSE.
5. BACKFLOW ASSEMBLY SHALL BE PURCHASED AND INSTALLED AS A UNIT, AS SHIPPED BY THE MANUFACTURER, WITH NO MODIFICATIONS TO ANY PART OF THE ASSEMBLY.
6. TWO SUPPORTS, EITHER WALL OR FLOOR, ONE ON EACH SIDE OF THE ASSEMBLY, MUST FIRMLY ANCHOR THE ASSEMBLY.

APPROVED BY CITY ENGINEER:	DATE: 8/5/2016	CITY OF AUBURN WASHINGTON	DOUBLE CHECK VALVE ASSEMBLY (INSIDE INSTALLATION)
COMMUNITY DEVELOPMENT & PUBLIC WORKS DEPT.			STANDARD DETAIL: W-25.1

Plotted by: Craig Dobyns on 7/13/2016 File location: M:\Construction Standard Details\Approved Drawing Files (dwg)\Water\STDETL-W-25.1