RIGHT-OF-WAY (ROW) USE INFORMATIONAL PACKET BANNERS

Form #FE060
Updated
January 2020

Physical Address:	Mailing Address:	Webpage & Email:	Phone & Fax:
Auburn City Hall Annex, 2nd Floor 1 East Main Street	25 West Main Street Auburn, WA 98001-4998	www.auburnwa.gov aprice@auburnwa.gov	Phone: 253-931-3010 Fax: 253-931-3053

CONTENTS

1. Right-of Way Use Permit Application for Banners – Form FE098 - 2 Pages
2. Banner Standard Detail – G-01.3 – 1 Page
3. Right-of Way Use Notice to Applicant – Form FE189 - 1 Page
4. Right-of-Way Use Indemnification and Hold Harmless – Form FE166 – 1 Page
5. General Conditions for Issuance of Right-of-Way Use Permits for Banners – Form FE035 Banners – 3 Pages

City staff will be happy to meet with you in person, speak with you over the phone or communicate through e-mail if you have questions as to the process, requirements, fees, review or status of your particular request at any stage of your application. Please contact Amber Price, Right-of-Way Specialist at 253-804-3120 or aprice@auburnwa.gov.

RIGHT-OF-WAY USE PERMIT APPLICATION
BANNER

Form #FE098
Updated
January 2020

Physical Address:	Mailing Address:	Webpage & Email:	Phone & Fax:
Auburn City Hall Annex, 2nd Floor 1 East Main Street	25 West Main Street Auburn, WA 98001-4998	www.auburnwa.gov aprice@auburnwa.gov	Phone: 253-931-3010 Fax: 253-931-3053

APPLICATION TYPE	APPLICATION FEES – All fees are non-refundable and due with the application.	FOR OFFICE USE ONLY
☐ Type A – Banner Permit.	$56.00 per banner per time slot per location – Fees are non-refundable.	Permit #
		Date Received
Banner Location	**Dates Requested**	
☐ Main Street		
☐ BNSF Rail Bridge – North Side		Total Fees $
☐ BNSF Rail Bridge – South Side		Receipt #
Purpose of banner and date of event.		

APPLICANT INFORMATION (All information related to this application will be sent to this contact)		
Company Name		
Contact Person		
Address		
City, State, Zip		
Phone Number		
Fax Number		
E-Mail Address		
I hereby certify and declare under penalty of perjury under Washington law that the statements furnished by me on this application are true and complete to the best of my knowledge and that I will comply with the provisions of the Auburn City Code in doing business in Auburn.		
Date	**Signature**	**Title**

ADDITIONAL APPLICANT INFORMATION			
The City requires the name, daytime telephone and contact information of three (3) responsible persons from the Applicant, any of which can be contacted at any time during the life of the application and permit in the event the need arises.			
	1.	2.	3.
Company Name			
Contact Person			
Address			
City, State, Zip			
Phone Number			
Fax Number			
E-Mail Address			

REQUIRED DOCUMENTS
☐ Initialed Notice to Applicant – Form FE189 ☐ Signed and Notarized Hold Harmless Agreement – Form FE166 The City may require information and documentation at the applicants expense in addition to those items listed above in order to perform a complete review of your application. If required, the applicant will be informed and information is due as soon as possible so that City Staff can continue to review your application.

Acceptance of this application by the City and payment of any fees by the applicant does not constitute approval or compliance with the rules, regulations or requirement of any other jurisdictions, which may relate to the above request.

Banners are due to the City 3 business days prior to the Monday that it is scheduled to be hung unless otherwise requested. Applicants will be notified when their banner is taken down and available for pick up. Banners must be picked up within 3 business days of notification as the City does not have room to store banners.

Banners that do not meet the City Standard Detail G-01.3 will not be hung. If you or the company that is making your banner have questions about the Standard Detail or any aspect of the banner construction please contact Amber Price, Right-of-Way Specialist at 253-804-3120 or aprice@auburnwa.gov.

The Banner Schedule for the following year opens on August 1st and applications and scheduling are accepted on first come, first serve basis. In the event of competing interests, City events shall take priority followed by community events and then all other requests.

City staff will be happy to meet with you in person, speak with you over the phone or communicate through e-mail if you have questions as to the process, requirements, fees, review or status of your particular request at any stage of your application. Please contact Amber Price, Right-of-Way Specialist at 253-804-3120 or aprice@auburnwa.gov.

Plotted by: Craig Boyne on 12/20/2019 File location: M:\Construction Standard Details\Current Working Dwg\General\STDETL-G-01.3

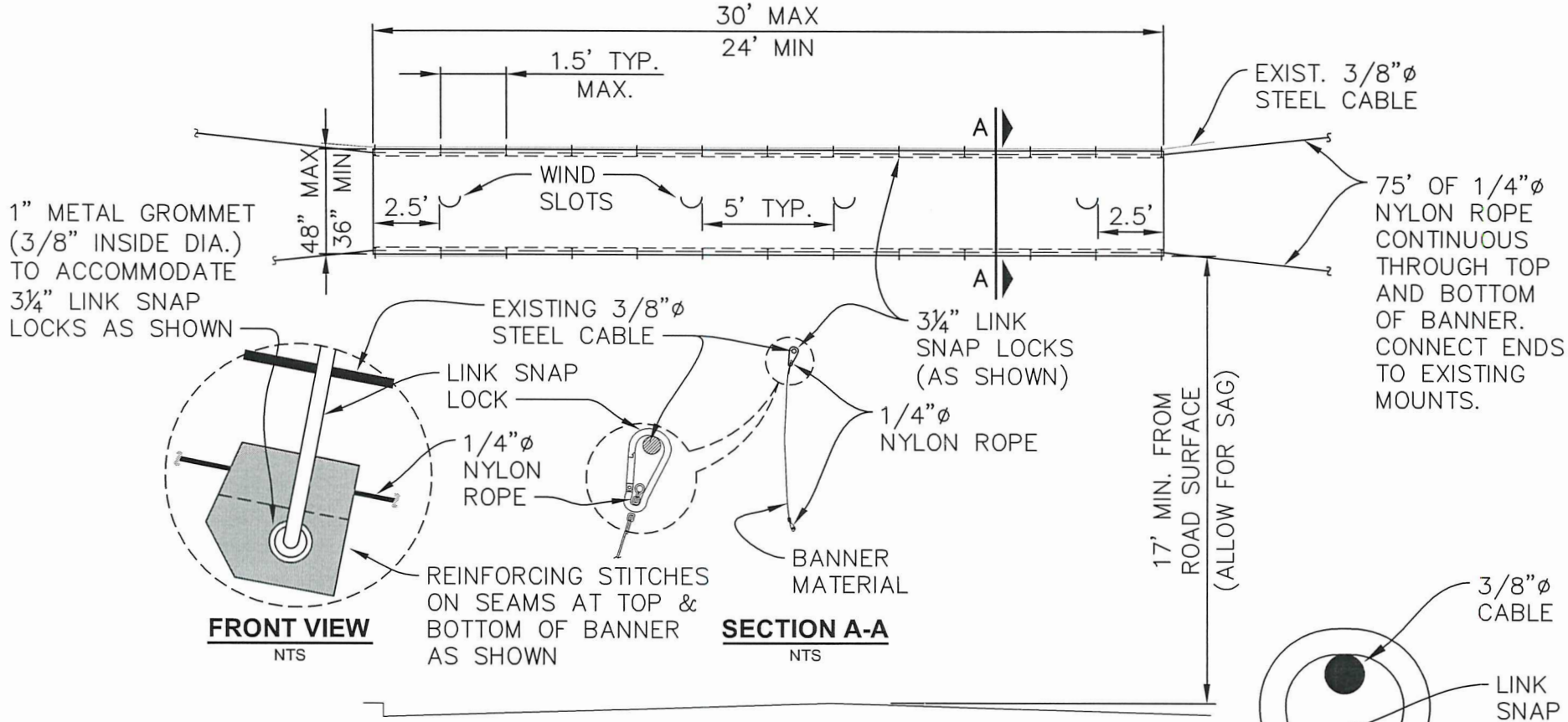

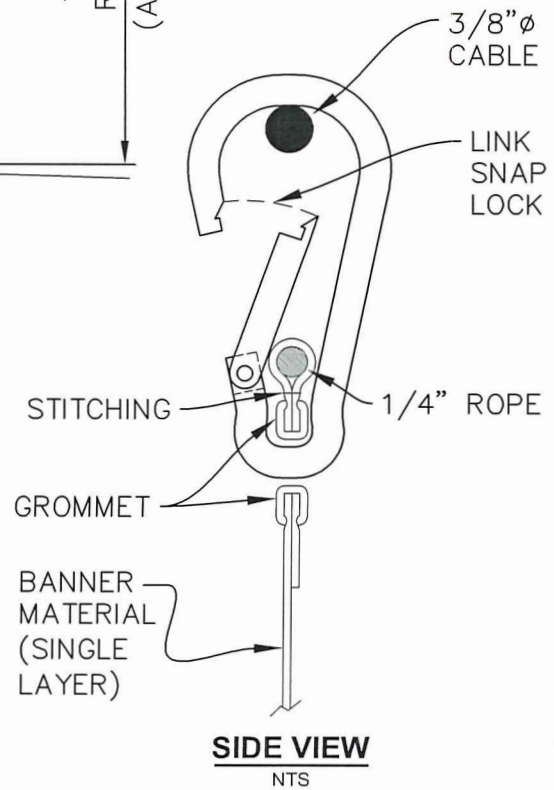

NOTES:

1. WIND SLOT SHALL BE 6" DIAMETER HALF CIRCLE, MINIMUM. THEY MAY BE LOCATED IN AREAS WHICH DO NOT DETRACT FROM THE BANNER.
2. WIND SLOTS SHALL BE SPACED ONE SLOT PER 5 FT. OF BANNER LENGTH.
3. BANNER SHALL BE DURABLE TEARING RESISTANT MATERIAL, I.E., NYLON, VINYL, ETC.
4. BANNER SHALL BE CONNECTED TO EXISTING CABLE WITH DETACHABLE 3¼"" LINK SNAP LOCKS AS SHOWN. OTHER METAL RING TYPES WILL NOT BE ACCEPTED. APPLICANT SHALL PROVIDE A MINIMUM OF 40 LINK SNAP LOCKS INSTALLED ON THE TOP AND BOTTOM OF BANNER AS SHOWN (20 ON EACH SIDE). NOT ALL LOCATIONS REQUIRE LINK SNAP LOCKS ON THE BOTTOM. APPLICANT TO VERIFY DURING BANNER APPLICATION SUBMITTAL.
5. REINFORCING STITCHES SHALL BE PROVIDED ON SEAMS AT TOP & BOTTOM OF BANNER.
6. BANNER SHALL BE CONSTRUCTED USING A SINGLE LAYER OF BANNER MATERIAL. DOUBLE SIDED BANNERS SHALL HAVE PRINT ON BOTH SIDES OF the SINGLE LAYER MATERIAL.
7. BANNER CONSTRUCTION SHALL BE APPROVED BY THE CITY ENGINEER PRIOR TO BANNER BEING DEPLOYED AT THE PERMITTED LOCATION.

APPROVED BY CITY ENGINEER: Chris Gregory DATE: 12/26/19

CITY OF AUBURN WASHINGTON

PUBLIC WORKS DEPARTMENT

BANNER DETAIL

STANDARD DETAIL: G-01.3

RIGHT-OF-WAY USE NOTICE TO APPLICANT

Form #FE189
Updated
January 2020

Physical Address:	Mailing Address:	Webpage & Email:	Phone & Fax:
Auburn City Hall Annex, 2nd Floor 1 East Main Street	25 West Main Street Auburn, WA 98001-4998	www.auburnwa.gov aprice@auburnwa.gov	Phone: 253-931-3010 Fax: 253-931-3053

FOR OFFICE USE ONLY	
Permit #	**Date Received**

APPLICANT INFORMATION (All information related to this application will be sent to this contact)		
Company Name		
Contact Person		
Address		
City, State, Zip		
Phone Number		
Fax Number		
E-Mail Address		
I hereby certify and declare under penalty of perjury under Washington law that the statements furnished by me on this application are true and complete to the best of my knowledge and that I will comply with the provisions of the Auburn City Code in doing business in Auburn.		
Date	**Signature**	**Title**

Please read and initial your understanding next to each statement below and submit this form with the Right-of-Way Use Permit Application. If you have questions about this form please contact Amber Price, Right-of-Way Specialist at 253-804-3120 or aprice@auburnwa.gov.

Applicant Initials	Notice
	1. Applicant acknowledges receipt of "General Conditions for issuance of Right-of-Way Use Permits"
	2. Applicant acknowledges that Right-of-Way Use Permit application fees are non-refundable.
	3. Applicant is responsible for planning in advance of the requested permit to allow sufficient time for City review and determination that the application is complete and adequate for providing a staff recommendation and forwarding to the City Engineer for consideration.
	4. Applicant understands that submittal of an application and payment of the application fee does not guarantee approval of the permit or limit in any way the conditions the City may place on the permit, if approved.
	5. Applicant is solely responsible for providing all elements of the application as the City determines is necessary to provide a complete and adequate application.
	6. Applicant acknowledges full responsibility for any liabilities arising from their use of the right-of-way.

CITY OF AUBURN WASHINGTON	**RIGHT-OF-WAY USE** **INDEMNIFICATION AND HOLD HARMLESS**	Form #FE166 Updated January 2020

Physical Address:	Mailing Address:	Webpage & Email:	Phone & Fax:
Auburn City Hall Annex, 2nd Floor 1 East Main Street	25 West Main Street Auburn, WA 98001-4998	www.auburnwa.gov aprice@auburnwa.gov	Phone: 253-931-3010 Fax: 253-931-3053

FOR OFFICE USE ONLY	
Permit #	**Date Received**

INDEMNIFICATION AND HOLD HARMLESS AGREEMENT

Permit Holder releases and shall defend, indemnify and hold harmless Auburn, its heirs, successors, and assigns, and the respective directors, officers, employees, contractors, and agents of Auburn and its heirs, successors, and assigns (collectively referred to as the "Indemnitees") from any and all claims, losses, costs, liabilities, damages and expenses (including, but not limited to, reasonable attorneys' fees) arising (whether before or after termination of the Term) out of or in connection with performance of this right-of-way permit, the enforcement of this permit by Auburn, any default under or breach of this permit by the Permit Holder or the acts or omissions of the Permit Holder or any of its suppliers, contractors or subcontractors of any tier, the respective successors and assigns of the Permit Holder or any such suppliers, contractors or subcontractors, the directors, officers, employees and agents of each of the foregoing, or anyone acting on the Permit Holder's behalf in connection with this permit. To the fullest extent permitted by applicable law, the foregoing release, indemnity and hold harmless shall apply regardless of any act, omission, fault, negligence or strict liability of the Indemnities; provided, however, that the Permit Holder shall not be required to so indemnify any Indemnitee(s) against any claim, loss, cost, liability, damage or expense to the extent the same is caused by or results from the sole negligence of any Indemnitee(s). In connection with any action to enforce this indemnification, the Permit Holder waives any immunity, defense, or protection under any workers' compensation, industrial insurance or similar laws (including, but not limited to, the Washington Industrial Insurance Act, Title 51, of the Revised Code of Washington). Auburn is willing to grant this permit only in consideration of and in reliance upon such release, indemnity and hold harmless. Consequently, such release, indemnity and hold harmless shall be construed broadly in favor of the Indemnitees.

DATED THIS _____ DAY OF _____, 20___.

_____
SIGNATURE OF PERMIT HOLDER

_____
COMPANY OR ORGANIZATION

STATE OF WASHINGTON)
) ss.
County of _____)

On this day personally appeared before me _____, to me known to be the individual described in and who executed the within and foregoing instrument, and acknowledged that _____ signed the same as a free and voluntary act and deed, for the uses and purposes therein mentioned.

GIVEN under my hand and official seal this _____ day of _____, 20___.

_____
_____
NOTARY PUBLIC IN AND FOR THE STATE OF
WASHINGTON, RESIDING AT _____

MY COMMISSION EXPIRES _____

GENERAL CONDITIONS FOR ISSUANCE OF RIGHT-OF-WAY (ROW) USE PERMITS

Form #FE035
Updated
January 2020

Physical Address:	Mailing Address:	Webpage & Email:	Phone & Fax:
Auburn City Hall Annex, 2nd Floor 1 East Main Street	25 West Main Street Auburn, WA 98001-4998	www.auburnwa.gov aprice@auburnwa.gov	Phone: 253-931-3010 Fax: 253-931-3053

FOR OFFICE USE ONLY	
Permit #	**Date Received**

CONTRACTORS

1. Must be licensed with the State of Washington.
2. Provide Bond of 150% of job cost.
3. Must provide Hold Harmless Agreement for the City.
4. Must abide by insurance requirements below.
5. Must have additional insurance for "collapse", “underground" and "explosion" and "products and/or completed operations".
6. All subcontractors working for the contractor shall be covered by items 1-5 above.
7. Must submit a traffic control plan, consisting of a map of the area and indicating placement of cones and/or barricades. Cones and barricades must be supplied by the applicant.
8. Must comply with any special conditions/provisions.
9. If work is an emergency repair, Contractor agrees to comply with requirements under this section, on the next working day.

ALL OTHER APPLICANTS

1. Must abide by insurance requirements below.
2. Must provide Hold Harmless Agreement for the City.
3. May need to submit a traffic control plan, consisting of a map of the area and indicating placement of cones and/or barricades. Cones and barricades must be supplied by the applicant.
4. Must comply with any special conditions/provisions.
5. If the use involves blocking a street or portion of a street for a block party, carnival, sale, etc., the applicant must provide a petition signed by all persons whose access is affected by the use of the right-of-way.

FEE SCHEDULE

Right-of Way Use Permit Fees: *(Per Ordinance No. 6125 and Resolution No. 5255)*

Type A – Banner: $56.00

Permits are valid for the specific dates, times and locations specified on the permit unless otherwise terminated by the City. The applicant must ensure that the City has a current insurance certificate to be kept in the permit file at all times.

The application fee for a right-of-way use permit shall be paid at the time the application is filed, provided however, bona fide governmental agencies of the federal government or the State of Washington or subdivisions thereof shall be exempt from payment of said fee.

REFUNDS
Right-of-Way Use Permit application fees are non-refundable.

APPROVALS

1. All ROW Use Permit Applications shall be reviewed by City staff and approved by the City Engineer.
2. For certain uses the City Engineer may direct staff to draft a formal agreement that would require approval by the City Council where the City Engineer determines there may be future public concerns with the use that are not known at the time of the application.
3. The City may require a financial security that guarantees the safe removal and restoration of ROW once the permit expires or terminates. A financial security in a form acceptable to the City Engineer in the amount established by the City Engineer may be required at the discretion of the City Engineer. A staff review of the proposal will determine the need for such securities.

INSURANCE REQUIREMENTS FOR ROW USE PERMITS (unless otherwise noted in the special conditions for your permit)
The Applicant shall procure and maintain for the duration of the Permit, insurance against claims for injuries to persons or damage to property which may arise from or in connection with operations or activities performed by or on the Applicant's behalf with the issuance of this Permit.

No Limitation
Applicant's maintenance of insurance as required by the agreement shall not be construed to limit the liability of the Applicant to the coverage provided by such insurance, or otherwise limit the City's recourse to any remedy available at law or in equity.

Verification of Coverage
Applicant shall furnish the City with original certificates and a copy of the amendatory endorsements, including the additional insured endorsement, evidencing the insurance requirements of the Applicant before issuance of the Permit.

Acceptability of Insurers
Insurance is to be placed with insurers with a current A.M. Best rating of not less than A:VII.

Minimum Scope of Insurance
Applicant shall obtain insurance of the type described below:

1. Commercial General Liability insurance shall be written on Insurance Services Office (ISO) occurrence form CG 00 01 and shall cover products liability. The City shall be named as an insured under the Applicant's Commercial General Liability insurance policy using ISO Additional Insured-State or Political Subdivisions-Permits CG 20 12 or a substitute endorsement providing equivalent coverage.
2. Automobile Liability insurance covering all owned, non-owned, hired and leased vehicles. Coverage shall be written on Insurance Services Office (ISO) form CA 00 01 or a substitute form providing equivalent liability coverage. If necessary, the policy shall be endorsed to provide contractual liability coverage.

Minimum Amounts of Insurance
Applicant shall maintain the following insurance limits:

1. Commercial General Liability insurance shall be written with limits no less than $1,000,000 each occurrence, $2,000,000 general aggregate and a $2,000,000 products- completed operations aggregate limit.
2. Automobile Liability insurance with a minimum combined single limit for bodily injury and property damage of $1,000,000 per accident.

Other Insurance Provisions
The insurance policies are to contain, or be endorsed to contain, the following provisions for _Commercial General Liability insurance:

1. The Applicant's insurance coverage shall be primary insurance as respect the City. Any Insurance, self-insurance, or insurance pool coverage maintained by the City shall be excess of the Applicant's insurance and shall not contribute with it.

2. The Applicant's insurance shall be endorsed to state that coverage shall not be cancelled by either party, except after thirty (30) days prior written notice by certified mail, return receipt requested, has been given to the City.

CONTACT INFORMATION

For questions regarding ROW Use Permit Applications please contact Amber Price, Right-of-Way Specialist, Public Works, at (253) 804-3120 or send an email to: aprice@auburnwa.gov .

Public Works, Engineering Services (253) 931-3010
Office hours are Monday through Friday, except holidays, 8:00am-5:00 pm.