CITY OF AUBURN

Public Works

Surface Water Management Manual
November 2009

Revision #1

Effective June 6, 2014

City of Auburn
Department of Public Works
25 West Main
Auburn, WA 98001-4998

Notice

This manual was developed and written by the City of Tacoma Environmental Services Maintenance Division and Science and Engineering Division staff. It has been modified for use within the City of Auburn with written permission from the City of Tacoma.

Acknowledgement

The City of Auburn would like to thank the City of Tacoma for permission to use the Tacoma Surface Water Management Manual (SWMM) as the basis for this document. The City would further like to acknowledge that the Tacoma SWMM was developed and written by the City of Tacoma Environmental Services Maintenance Division and Science and Engineering Division staff.

Special thanks to Lorna Mauren, PE and the Tacoma Science and Engineering Division for providing an editable electronic version of the Tacoma SWMM.

THIS PAGE INTENTIONALLY LEFT BLANK.

REVISION DIRECTIONS

AUBURN SURFACE WATER MANAGEMENT MANUAL
EFFECTIVE DATE 06/06/2014
Revision No. 1

Preface, Volume I, Volume III, & Volume V

New, reprinted pages included with this revision are listed by page number in the right-hand column below. The left-hand column lists obsolete material, which should be removed from the book. Follow the instruction columns in sequence: remove and insert pages as necessary.

When completed, insert these directions in a convenient place near the front of the Surface Water Management Manual. For future reference, the person making these changes may also date and initial this page.

Remove these pages	**Insert these pages**
Preface page 3-4	**Preface page 3-4**
Volume I, Table of Contents	**Volume I, Table of Contents**
Volume I, pages 25-32	**Volume I, pages 25-32**
Volume I, pages 47-48	**Volume I, pages 47-48**
Volume III, pages 307-310	**Volume III, pages 307-310**
Volume III, pages 351-354	**Volume III, pages 351-354**
Volume III, pages 357-364	**Volume III, pages 357-364**
Volume V, pages 701-706	**Volume V, pages 701-706**
Volume V, pages 715-716	**Volume V, pages 715-716**

Approved by City of Auburn, Public Works Committee April 21, 2014

Table of Contents

Preface 1
- **Objective** 1
- **Organization of this Manual** 2
- **How to Use this Manual** 3
- **Development of Best Management Practices (BMPs) for Stormwater Management** 4
  - Best Management Practices (BMPs) 4
  - Source Control BMPs 4
  - Treatment BMPs 4
  - Flow Control BMPs 4
- **Related Documentation** 5
  - Department of Ecology's Stormwater Management Manual 5
  - Applicable Federal, State and Local Regulatory Requirements 5

Volume I: Stormwater Site Planning 7
- **Purpose of this Volume** 7
- **Content and Organization of this Volume** 7
- **Chapter 1 Development and Redevelopment Impacts** 8
  - 1.1 Hydrologic Changes 8
  - 1.2 Water Quality Changes 8
  - 1.3 Biological Changes 9
- **Chapter 2 Areas with Special Development Requirements** 10
  - 2.1 Groundwater Protection Area 2 10
  - 2.2 Impaired Water Bodies 10
  - 2.3 Floodplains 10
- **Chapter 3 Minimum Requirements for New Development and Redevelopment** 11
  - 3.1 Overview of the Minimum Requirements 11
  - 3.2 Exemptions 12
    - 3.2.1 Road Maintenance 12
    - 3.2.2 Parking Lots and Parking Lot Maintenance 12
    - 3.2.3 Underground Utility Projects 13
    - 3.2.4 Minor Clearing and Grading 13
    - 3.2.5 Emergencies 13
    - 3.2.6 Key Terms 13
  - 3.3 Applicability of the Minimum Requirements 14
    - 3.3.1 New Development 17
    - 3.3.2 Redevelopment 17
    - 3.3.3 Assessed Value 18
    - 3.3.4 Roads 18
    - 3.3.5 Cumulative Impact Mitigation Requirement 19

3.4 Description of Minimum Requirements ... 21
3.4.1 Minimum Requirement #1: Preparation of a Stormwater Site Plan ... 21
3.4.2 Minimum Requirement #2: Construction Stormwater Pollution Prevention (SWPP) ... 21
3.4.3 Minimum Requirement #3: Source Control of Pollution ... 22
3.4.4 Minimum Requirement #4: Preservation of Natural Drainage Systems and Outfalls ... 23
3.4.5 Minimum Requirement #5: On-Site Stormwater Management ... 23
3.4.6 Minimum Requirement #6: Runoff Treatment ... 24
3.4.7 Minimum Requirement #7: Flow Control ... 25
3.4.8 Minimum Requirement #8: Wetlands Protection ... 27
3.4.9 Minimum Requirement #9: Operation and Maintenance ... 29
3.4.10 Minimum Requirement #10: Off-Site Analysis and Mitigation ... 29
3.5 Exceptions ... 30

Chapter 4 Preparation of Stormwater Site Plans ... 33
4.1 Stormwater Site Plan Outline ... 33
4.2 Plans Required After Stormwater Site Plan Approval ... 40
4.3 Land Use Submittal Requirements ... 40

Appendix A Regulatory Requirements ... 41
Appendix B Stormwater Site Plan Submittal Requirements Checklist ... 46
Appendix C Hydraulic Analysis Worksheet ... 53
Appendix D Maintenance Standards for Drainage Facilities ... 55
Appendix E Wetlands and Stormwater Management Guidelines ... 85

Volume II: Stormwater Management for Construction Sites ... 113
Purpose of this Volume ... 113
Content and Organization of this Volume ... 113
Chapter 1 The 12 Elements of Construction Stormwater Pollution Prevention ... 114
Chapter 2 Developing a Construction Stormwater Pollution Prevention Plan (SWPPP) ... 123
2.1 General Requirements and Guidelines ... 123
2.1.1 BMP Standards and Specifications ... 123
2.1.2 General Principles ... 124
2.2 Step-by-Step Procedure ... 124
2.2.1 Step 1 – Data Collection ... 124
2.2.2 Step 2 – Data Analysis ... 125
2.2.3 Step 3 – Construction SWPPP Development and Analysis ... 127
2.3 Construction SWPPP Checklists ... 128

Chapter 3 Standards and Specifications for Best Management Practices (BMPs) ... 134
3.1 Source Control BMPs ... 135
3.1.1 BMP C101: Preserving Natural Vegetation ... 135
3.1.2 BMP C102: Buffer Zone ... 138
3.1.3 BMP C103: High Visibility Plastic or Metal Fence ... 139
3.1.4 BMP C104: Stake and Wire Fence ... 140
3.1.5 BMP C105: Stabilized Construction Entrance ... 141

3.1.6 BMP C106: Wheel Wash ... 144
3.1.7 BMP C107: Construction Road/Parking Area Stabilization ... 146
3.1.8 BMP C120: Temporary and Permanent Seeding ... 148
3.1.9 BMP C121: Mulching ... 154
3.1.10 BMP C122: Nets and Blankets ... 156
3.1.11 BMP C123: Plastic Covering ... 161
3.1.12 BMP C124: Sodding ... 164
3.1.13 BMP C125: Compost ... 165
3.1.14 BMP C126: Topsoiling ... 167
3.1.15 BMP C127: Polyacrylamide for Soil Erosion Protection ... 170
3.1.16 BMP C130: Surface Roughening ... 173
3.1.17 BMP C131: Gradient Terraces ... 175
3.1.18 BMP C140: Dust Control ... 177
3.1.19 BMP C150: Materials On Hand ... 179
3.1.20 BMP C151: Concrete Handling ... 180
3.1.21 BMP C152: Sawcutting and Surfacing Pollution Prevention ... 181
3.1.22 BMP C153: Material Delivery, Storage and Containment ... 182
3.1.23 BMP C154: Concrete Washout Area ... 184
3.1.24 BMP C160: Certified Erosion and Sediment Control Lead ... 190
3.1.25 BMP C161: Payment of Erosion Control Work ... 192
3.1.26 BMP C162: Scheduling ... 193
3.1.27 BMP C180: Small Project Construction Stormwater Pollution Prevention ... 194
3.2 Runoff, Conveyance and Treatment BMPs ... 196
3.2.1 BMP C200: Interceptor Dike and Swale ... 196
3.2.2 BMP C201: Grass-Lined Channels ... 199
3.2.3 BMP C202: Channel Lining ... 203
3.2.4 BMP C203: Water Bars ... 205
3.2.5 BMP C204: Pipe Slope Drains ... 207
3.2.6 BMP C205: Subsurface Drains ... 210
3.2.7 BMP C206: Level Spreader ... 213
3.2.8 BMP C207: Check Dams ... 215
3.2.9 BMP C208: Triangular Silt Dike (Geotextile-Encased Check Dam) ... 218
3.2.10 BMP C209: Outlet Protection ... 222
3.2.11 BMP C220: Storm Drain Inlet Protection ... 224
3.2.12 BMP C231: Brush Barrier ... 234
3.2.13 BMP C232: Gravel Filter Berm ... 236
3.2.14 BMP C233: Silt Fence ... 237
3.2.15 BMP C234: Vegetated Strip ... 243
3.2.16 BMP C235: Straw Wattles ... 244
3.2.17 BMP C240: Sediment Trap ... 247
3.2.18 BMP C241: Temporary Sediment Pond ... 251
3.2.19 BMP C250: Construction Stormwater Chemical Treatment ... 258
3.2.20 BMP C251: Construction Stormwater Filtration ... 265
3.2.21 BMP C252: High pH Neutralization using CO_2 ... 269
3.2.22 BMP C253: pH Control for High pH Water ... 272

Appendix A Standard Notes for Erosion Control Plans ... 273
Appendix B Background Information on Chemical Treatment ... 274
Appendix C Construction SWPPP Short Form ... 277

Volume III: Surface Water Quantity Control and Conveyance 307
Purpose of this Volume 307
Content and Organization of this Volume 307
Chapter 1 Hydrologic Analysis 308
1.1 Minimum Computational Standards 308
1.2 Western Washington Hydrology Model 308
1.3 Single-Event Hydrograph Method 309
1.3.1 Design Storm 309
1.3.2 Curve Number 309
1.4 Closed Depression Analysis 310
Chapter 2 Flow Control Design 312
2.1 Roof Downspout Controls 312
2.1.1 Selection of Roof Downspout Controls 312
2.1.2 Downspout Infiltration Systems 313
2.1.3 Downspout Dispersion Systems 319
2.1.4 Bioinfiltration "Rain Gardens" 321
2.1.5 Collect and Convey 326
2.2 Infiltration Facilities for Stormwater Flow Control 327
2.2.1 Purpose 327
2.2.2 Description 327
2.2.3 Application 327
2.2.4 Design Methodology 329
2.2.5 Simplified Approach 329
2.2.6 Detailed Approach 330
2.2.7 Site Characterization Criteria 334
2.2.8 Design Infiltration Rate Determination – Guidelines and Criteria 338
2.2.9 Three Methods for Determining Long-term Infiltration Rates for Sizing Infiltration Facilities 339
2.2.10 Site Suitability Criteria (SSC) 343
2.2.11 Design Criteria for Infiltration Facilities 345
2.2.12 Construction Criteria 346
2.2.13 Maintenance Criteria 347
2.2.14 Verification of Performance 347
2.2.15 Infiltration Basins 347
2.2.16 Infiltration Trenches 349
2.3 Detention Facilities 351
2.3.1 Detention Ponds 351
2.3.2 Detention Tanks 367
2.3.3 Detention Vaults 371
2.3.4 Control Structures 375
2.3.5 Other Detention Options 386

Chapter 3 Conveyance System Design and Hydraulic Analysis 387
3.1 Conveyance System Analysis Requirements 387
3.1.1 On-site Analysis 387
3.1.2 Offsite Analysis (1/4 mile Downstream Analysis) 388
3.2 Design Event 388
3.2.1 Additional Design Criteria 389
3.3 Methods of Analysis 389
3.3.1 Rational Method 390
3.4 Pipes, Culverts and Open Channels 396
3.4.1 Pipe Systems 396
3.4.2 Culverts 413
3.4.3 Open Channels 424
3.5 Outfalls Systems 440
3.5.1 Outfall Design Criteria 440
3.5.2 Tightline Systems 448
3.5.3 Habitat Considerations 448
3.6 Pump Systems 448
3.6.1 Design Criteria 449
3.6.2 Pump Requirements 449
3.6.3 Additional Requirements 449
3.6.4 Sump Pumps 450
3.7 Easements and Access 450
3.7.1 Public Easements 450
3.7.2 Private Easements 451
3.7.3 Maintenance Access 451
Appendix A Auburn Design Storm 453
Appendix B Procedure for Conducting a Pilot Infiltration Test 454

Volume IV: Source Control Best Management Practices 457
Purpose of this Volume 457
Content and Organization of this Volume 457
Chapter 1 Frequently Asked Questions 458
1.1 Applicability 458
1.2 Pollutants of Concern 458
1.2.1 pH 458
1.2.2 Total Suspended Solids 458
1.2.3 Oils and Greases 458
1.2.4 Oxygen-demanding Substances 458
1.2.5 Metals 459
1.2.6 Bacteria and Viruses 459
1.2.7 Nutrients 459
1.2.8 Toxic Organic Compounds 459
1.2.9 Other Chemicals and Substances 459
1.3 Types of Source Control BMPs 460
1.3.1 Operational BMPs 460
1.3.2 Structural BMPs 460

Chapter 2 Worksheet for Commercial and Industrial Activities 461
Chapter 3 BMPs for Homeowners 465
3.1 Automobile Washing (for Single-Family Residences).... 465
3.1.1 Suggested BMPs.... 465
3.2 Automobile Maintenance 466
3.2.1 Required BMPs 466
3.2.2 Suggested BMPs.... 466
3.3 Storage of Solid Wastes and Food Wastes 467
3.3.1 Suggested BMPs.... 467
3.4 Composting 467
3.4.1 Suggested BMPs.... 467
3.5 Yard Maintenance and Gardening.... 468
3.5.1 Required BMPs 468
3.5.2 Suggested BMPs.... 468
3.6 Swimming Pool and Spa Cleaning and Maintenance.... 469
3.6.1 Required BMPs 469
3.6.2 Suggested BMPs.... 469
3.7 Household Hazardous Material Use, Storage, and Disposal 469
3.7.1 Required BMPs 470
3.7.2 Suggested BMPs.... 470
3.8 General Home Maintenance.... 471
3.8.1 Suggested BMPs.... 471
3.9 Pet Waste 471
3.9.1 Suggested BMPs.... 471
Chapter 4 BMPs for Commercial and Industrial Activities....472
4.1 BMPs to Consider for all Activities.... 472
4.2 Cleaning and Washing Activities 473
4.2.1 BMP A101: Cleaning or Washing of Tools, Engines and Manufacturing Equipment 473
4.2.2 BMP A102: Cleaning or Washing of Cooking Equipment.... 476
4.2.3 BMP A103: Washing, Pressure Washing and Steam Cleaning of Vehicles/Equipment/Building Structures 478
4.2.4 BMP A104: Collection and Disposal of Wastewater in Mobile Interior Washing Operations.... 481
4.3 Transfer of Liquid or Solid Materials.... 483
4.3.1 BMP A201: Loading and Unloading Areas for Liquid or Solid Material 483
4.3.2 BMP A202: Fueling at Dedicated Stations 488
4.3.3 BMP A203: Vehicle Maintenance Activities.... 494
4.3.4 BMP A204: Mobile Fueling of Vehicles and Heavy Equipment.... 496
4.4 Production and Application Activities.... 499
4.4.1 BMP A301: Concrete and Asphalt Mixing and Production at Stationary Sites.... 499
4.4.2 BMP A302: Concrete Pouring, Concrete Cutting, and Asphalt Application at Temporary Sites 501
4.4.3 BMP A303: Manufacturing and Post-Processing of Metal Products 503
4.4.4 BMP A304: Wood Treatment Areas 505
4.4.5 BMP A305: Commercial Composting.... 507
4.4.6 BMP A306: Landscaping and Lawn/Vegetation Management 509
4.4.7 BMP A307: Painting, Finishing and Coating of Vehicles, Boats, Buildings and Equipment.... 514
4.4.8 BMP A308: Commercial Printing Operations 516
4.4.9 BMP A309: Manufacturing Operations – Outside 517

4.5 Storage and Stockpiling Activities 519
4.5.1 BMP A401: Storage or Transfer (Outside) of Solid Raw Materials, By-Products or Finished Products 519
4.5.2 BMP A402: Storage and Treatment of Contaminated Soils 522
4.5.3 BMP A403: Temporary Storage or Processing of Fruits or Vegetables 523
4.5.4 BMP A404: Storage of Solid Wastes and Food Wastes 525
4.5.5 BMP A405: Recyclers and Scrap Yards 527
4.5.6 BMP A406: Treatment, Storage or Disposal of Dangerous Wastes 528
4.5.7 BMP A407: Storage of Liquid, Food Waste or Dangerous Waste Containers 529
4.5.8 BMP A408: Storage of Liquids in Above-Ground Tanks 532
4.5.9 BMP A409: Parking and Storage for Vehicles and Equipment 535
4.6 Construction and Demolition Activities 536
4.6.1 BMP A501: Clearing, Grading and Preparation of Construction Sites 536
4.6.2 BMP A502: Demolition of Buildings 537
4.6.3 BMP A503: Building, Repair, Remodeling and Construction 538
4.7 Dust Control, and Soil and Sediment Control 540
4.7.1 BMP A601: Dust Control at Disturbed Land Areas and Unpaved Roadways and Parking Lots 540
4.7.2 BMP A602: Dust Control at Manufacturing Sites 542
4.7.3 BMP A603: Soil Erosion and Sediment Control at Industrial Sites 543
4.8 Other Activities 544
4.8.1 BMP A701: Commercial Animal Handling Areas 544
4.8.2 BMP A702: Log Sorting and Handling 545
4.8.3 BMP A703: Boat Building, Maintenance and Repair 546
4.8.4 BMP A704: Logging 549
4.8.5 BMP A705: Mining and Quarrying of Sand, Gravel, Rock, Peat, Clay and Other Materials 551
4.8.6 BMP A706: Swimming Pool and Spa Cleaning and Maintenance 552
4.8.7 BMP A707: De-Icing and Anti-Icing Operations for Streets & Highways 553
4.8.8 BMP A708: Roof and Building Drains at Manufacturing and Commercial Buildings 554
4.8.9 BMP A709: Urban Streets 555
4.8.10 BMP A710: Railroad Yards 557
4.8.11 BMP A711: Maintenance of Public and Utility Corridors and Facilities 558
4.8.12 BMP A712: Maintenance of Roadside Ditches 560
4.8.13 BMP A713: Maintenance of Stormwater Drainage and Treatment Facilities 562
4.8.14 BMP A714: Spills of Oil and Hazardous Substances 564
4.8.15 BMP A715: Water Reservoir, Transmission Mainline, Wellhead, and Hydrant Flushing Activities 566
4.8.16 BMP S101: Eliminate Illicit Storm Drainage System Connections 568
4.8.17 BMP S102: Dispose of Contaminated Stormwater and Waste Materials Properly 569
4.8.18 BMP S103: Discharge Process Wastewater to a Sanitary Sewer, Holding Tank, or Water Treatment System 570
4.8.19 BMP S108: Implement Integrated Pest Management Measures 571
4.8.20 BMP S109: Cleaning Catch Basins 572
4.9 Cover and Surround Activities 573
4.9.1 BMP S104: Cover the Activity with a Roof or Awning 573
4.9.2 BMP S105: Cover the Activity with an Anchored Tarp or Plastic Sheet 574
4.9.3 BMP S106: Pave the Activity Area and Slope to a Sump, Holding Tank, or Oil/Water Separator 575
4.9.4 BMP S107: Surround the Activity Area with a Curb, Dike, or Berm or Elevate the Activity 576

Chapter 5 Regulations and Requirements 580
5.1 City of Auburn Codes and Ordinances 580
5.2 State, Federal, and Other Regulations and Requirements 580
5.2.1 Washington State Department of Ecology Requirements for the Discharge of Process Wastewaters Directly to Surface Waters 580
5.2.2 Washington State Department of Ecology Requirements for Dangerous Waste Generators 581
5.2.3 Washington State Department of Ecology Stormwater NPDES Permit Requirements 581
5.2.4 Washington State Department of Ecology Requirements for Underground and Above Ground Storage Tanks 582
5.2.5 U.S. Environmental Protection Agency and Ecology Emergency Spill Cleanup Requirements 582
5.2.6 Washington State Department of Agriculture Pesticide Regulations 582
5.2.7 Puget Sound Clean Air Agency Air Quality Regulations 582
Appendix A Quick Reference Phone Numbers 583
Appendix B Recycling/Disposal of Vehicle Fluids and Other Wastes 584
Appendix C Example of an Integrated Pest Management Program (IPM) 585
Appendix D Recommendations for Management of Street Wastes 588

Volume V: Water Quality Treatment BMPs 603
Purpose of this Volume 603
Content and Organization of this Volume 603
Chapter 1 Treatment Facility Selection Process 604
1.1 Step-by-Step Selection Process for Treatment Facilities 604
Chapter 2 Treatment Facility Menus 610
2.1 Oil Control Menu 610
2.1.1 Performance Goal 610
2.1.2 Options 610
2.1.3 Application on the Project Site 611
2.2 Phosphorus Treatment Menu 611
2.2.1 Performance Goal 611
2.2.2 Options 611
2.3 Enhanced Treatment Menu 612
2.3.1 Performance Goal 612
2.3.2 Options 612
2.4 Basic Treatment Menu 613
2.4.1 Performance Goal 613
2.4.2 Options 614
Chapter 3 General Requirements for Stormwater Facilities 615
3.1 Design Flow Volume and Flow Rate 615
3.1.1 Water Quality Design Flow Volume 615
3.1.1 Water Quality Design Flow Rate 616
3.1.2 Flows Requiring Treatment 616
3.2 Sequence of Facilities 617
3.3 Setbacks, Slopes, and Embankments 618
3.3.1 Setbacks 618
3.3.2 Side Slopes and Embankments 619

3.4 Facility Liners 620
3.4.1 General Design Criteria 620
3.4.2 Design Criteria for Treatment Liners 622
3.4.3 Design Criteria for Low Permeability Liner Options 622
3.5 Hydraulic Structures 624
3.5.1 Flow Splitter Designs 624
3.5.2 Flow Spreading Options 627
Chapter 4 Pretreatment 632
4.1 Purpose 632
4.2 Application 632
4.3 BMPs for Pretreatment 632
4.3.1 BMP T610 Presettling Basin 632
Chapter 5 Infiltration and Bio-infiltration Treatment Facilities 634
5.1 Purpose 634
5.2 Application 634
5.3 Site Suitability 634
5.3.1 Setback Criteria (SSC-1) 635
5.3.2 Groundwater Protection Areas (SSC-2) 635
5.3.3 High Vehicle Traffic Areas (SSC-3) 635
5.3.4 Soil Infiltration Rate/Drawdown Time for Treatment (SSC-4) 636
5.3.5 Depth to Bedrock, Water Table, or Impermeable Layer (SSC-5) 636
5.3.6 Soil Physical and Chemical Suitability for Treatment (SSC-6) 637
5.3.7 Seepage Analysis and Control (SSC-7) 637
5.3.8 Cold Climate and Impact of Roadway Deicers (SSC-8) 637
5.3.9 Verification Testing of the Completed Facility 637
5.4 Site Characterization 638
5.4.1 Field Methods used to Determine Subsurface Characterization 638
5.4.2 Design Infiltration Rate Determination 640
5.5 BMPs for Infiltration and Bio-infiltration Treatment 644
5.5.1 BMP T710 Infiltration Basins 645
5.5.2 BMP T720 Infiltration Trenches 646
5.5.3 BMP T730 Bio-infiltration Swale 648
Chapter 6 Sand Filtration Treatment Facilities 650
6.1 Purpose 650
6.2 Description 650
6.3 Applications and Limitations 656
6.4 Site Suitability 656
6.5 Design Criteria 656
6.5.1 Objective 656
6.5.2 Sand Filter Sizing 656
6.6 Construction Criteria 659
6.7 Maintenance Criteria 659
6.7.1 BMP T810 Sand Filter Vault 661
6.7.2 BMP T820 Linear Sand Filter 664

Chapter 7 Biofiltration Treatment Facilities 666
7.1 Purpose 666
7.2 Applications 666
7.3 Site Suitability 666
7.4 Best Management Practices 666
7.4.1 BMP T910 Basic Biofiltration Swale 667
7.4.2 BMP T920 Wet Biofiltration Swale 683
7.4.3 BMP T930 Continuous Inflow Biofiltration Swale 685
7.4.4 BMP T940 Basic Filter Strip 686
7.4.5 BMP T950 Narrow Area Filter Strip 689
Chapter 8 Wetpool Facilities 691
8.1 Purpose 691
8.2 Best Management Practices 691
8.2.1 BMP T1010 Wetponds - Basic and Large 692
8.2.2 BMP T1020 Wetvaults 708
8.2.3 BMP T1030 Stormwater Treatment Wetlands 714
8.2.4 BMP T1040 Combined Detention and Wetpool Facilities 720
8.3 Combined Detention and Wetvault 724
8.4 Combined Detention and Stormwater Wetland 726
8.4.1 Sizing Criteria 726
8.4.2 Design Criteria 726
8.4.3 Inlet and Outlet Criteria 726
8.4.4 Planting Requirements 726
Chapter 9 Oil and Water Separators 727
9.1 Purpose 727
9.2 Description 727
9.3 Applications/Limitations 727
9.4 Site Suitability 730
9.5 Design Criteria 731
9.5.1 General Considerations 731
9.5.2 Criteria for Separator Bays 731
9.5.3 Criteria for Baffles 732
9.6 Oil and Water Separator BMPs 732
9.6.1 BMP T1110 API (Baffle type) Separator Bay 733
9.6.2 BMP T1111 Coalescing Plate (CP) Separator Bay 735
Chapter 10 Emerging Technologies 737
10.1 Background 737
10.2 Emerging Technology and the City of Auburn 737
10.3 Ecology Role in Evaluating Emerging Technologies 737
10.4 Evaluation of Emerging Technologies 737
10.5 Assessing Levels of Development of Emerging Technologies 738
10.6 Examples of Emerging Technologies for Stormwater Treatment and Control 739
Appendix A Basic Treatment Receiving Waters 741
Appendix B Procedure for Conducting a Pilot Infiltration Test 743
Appendix C Geotextile Specifications 745
Appendix D Turbulence and Short-Circuiting Factor 747

Volume VI: Low Impact Development and On-Site Stormwater Management.....749

Purpose of this Volume.....749

Content and Organization of this Volume.....749

Chapter 1 General Requirements.....750

1.1 Objectives.....750
1.2 Site Assessment.....750
1.3 Site Planning and Layout.....750
1.4 Retain Native Vegetation.....751
1.5 Minimize Clearing and Grading Impacts.....751

Chapter 2 Low Impact Development Best Management Practices.....752

2.1 Application.....752
2.2 Best Management Practices.....752
2.2.1 Dispersion and Soil Quality BMPs.....753
2.2.2 Site Design BMPs.....769
2.2.3 Low Impact Development BMPS.....771

Glossary.....789

References.....830

Figures

Figure I-3-1. Determining Minimum Requirements for New and Redevelopment Project Sites 15
Figure I-3-2. Determining Minimum Requirements for Flow Control 16
Figure I-3-3. Determining Minimum Requirements for Road-Related Projects 20

Figure II-3-1. Stake and Wire Fence 140
Figure II-3-2. Stabilized Construction Entrance 142
Figure II-3-3. Small-Site Stabilized Construction Entrance 143
Figure II-3-4. Wheel Wash 145
Figure II-3-5. Nets and Blankets – Slope Installation 159
Figure II-3-6. Nets and Blankets – Channel Installation 160
Figure II-3-7. Soil Erosion Protection – Plastic Covering 163
Figure II-3-8. Surface Roughening by Tracking and Contour Furrows 174
Figure II-3-9. Gradient Terraces 176
Figure II-3-10. Temporary Concrete Washout Facility 188
Figure II-3-11. Prefabricated Concrete Washout Container with Ramp 189
Figure II-3-12. Typical Grass-Lined Channels 201
Figure II-3-13. Temporary Channel Liners 202
Figure II-3-14. Soil Erosion Protection – Rip Rap Protection 204
Figure II-3-15. Pipe Slope Drains 209
Figure II-3-16. Cross-Section of a Level Spreader 214
Figure II-3-17. Detail of a Level Spreader 214
Figure II-3-18. Check Dams 217
Figure II-3-19. Sediment Barrier – Triangular Sediment Filter Dikes 220
Figure II-3-20. Sediment Barrier – Geosynthetic Dike 221
Figure II-3-21. No Figure Placeholder 223
Figure II-3-22. Drop Inlet with Block and Gravel Filter 227
Figure II-3-23. Gravel and Wire Mesh Filter 228
Figure II-3-24. Catchbasin Filter 229
Figure II-3-25. Block and Gravel Curb Inlet Protection 231
Figure II-3-26. Curb and Gutter Sediment Barrier 233
Figure II-3-27. Brush Barrier 235
Figure II-3-28. Silt Fence 241
Figure II-3-29. Silt Fence Installation by Slicing 242
Figure II-3-30. Straw Wattles 246

Figure II-3-31. Cross-Section of a Sediment Trap 250
Figure II-3-32. Sediment Trap Outlet 250
Figure II-3-33. Sediment Pond 255
Figure II-3-34. Sediment Pond Cross Section 255
Figure II-3-35. Sediment Pond Riser Detail 256
Figure II-3-36. Riser Inflow Curves 257
Figure II-3-37. Floating Platform with Struts 260
Figure II-C-38. Sample Erosion and Sediment Control Plan 283
Figure II-C-39. Construction Entrance 291
Figure II-C-40. Stake and Wire Fence 292
Figure II-C-41. Sediment Barrier – Silt Fence 293
Figure II-C-42. Sediment Barrier – Triangular Sediment Filter Dikes 294
Figure II-C-43. Sediment Barrier – Geosynthetic Dike 295
Figure II-C-44. Sediment (Berm) Barrier – Straw Wattle Rolls 296
Figure II-C-45. Sediment (Berm) Barrier – Sandbag Berm 297
Figure II-C-46. Catch Basin Protection – Bag Filter 298
Figure II-C-47. Catch Basin Protection – Inlet Gravel and Filter Fabric 299
Figure II-C-48. Water Runoff Containment/Control – Sediment Trap Cross-Section 300
Figure II-C-49. Water Runoff Containment/Control – Sediment Trap Outlet 301
Figure II-C-50. Water Runoff Containment/Control – Drainage Swale Cross-Sections 302
Figure II-C-51. Soil Erosion Protection – Erosion Blankets and Turf Reinforcement Mats 303
Figure II-C-52. Soil Erosion Protection – Rip Rap Protection 304
Figure II-C-53. Soil Erosion Protection – Pipe Slope Drains 305
Figure II-C-54. Soil Erosion Protection – Tarp Covering 306

Figure III-2-1. Typical Downspout Infiltration Trench 316
Figure III-2-2. Alternative Downspout Infiltration Trench System for Coarse Sand and Gravel 317
Figure III-2-3. Typical Downspout Dispersion Trench 318
Figure III-2-4. Typical Infiltration Pond/Basin 328
Figure III-2-5. USDA Textural Triangle 337
Figure III-2-6. Observation Well Details 350
Figure III-2-7. Typical Detention Pond 353
Figure III-2-8. Typical Detention Pond Sections 354
Figure III-2-9. Overflow Structure 355
Figure III-2-10. Examples of Permanent Surface Water Control Pond Sign 359
Figure III-2-11. Weir Section for Emergency Overflow Spillway 367
Figure III-2-12. Typical Detention Tank 368
Figure III-2-13. Detention Tank Access Detail 369
Figure III-2-14. Typical Detention Vault 372

Figure III-2-15. Flow Restrictor (TEE) 380
Figure III-2-16. Flow Restrictor (Baffle) 381
Figure III-2-17. Flow Restrictor (Weir) 382
Figure III-2-18. Simple Orifice 383
Figure III-2-19. Rectangular, Sharp-Crested Weir 383
Figure III-2-20. V-Notch, Sharp-Crested Weir 384
Figure III-2-21. Sutro Weir 384
Figure III-2-22. Riser Inflow Curves 385
Figure III-3-23. Nomograph for Sizing Circular Drains Flowing Full 399
Figure III-3-24. Circular Channel Ratios 401
Figure III-3-25. Backwater Calculation Sheet 403
Figure III-3-26. Backwater Pipe Calculation Example 405
Figure III-3-27. Debris Barrier 412
Figure III-3-28. Headwater Depth for Smooth Interior Pipe Culverts with Inlet Control 415
Figure III-3-29. Headwater Depth for Corrugated Pipe Culverts with Inlet Control 416
Figure III-3-30. Junction Head Loss in Structures 419
Figure III-3-31. Head for Culverts (Pipe W/"N"=0.012) Flowing Full with Outlet Control 420
Figure III-3-32. Head for Culverts (Pipe W/"N"=0.024) Flowing Full with Outlet Control 421
Figure III-3-33. Critical Depth of Flow for Circular Culverts 422
Figure III-3-34. Ditches – Common Section 427
Figure III-3-35. Drainage Ditches – Common Sections 428
Figure III-3-36. Geometric Elements of Common Sections 429
Figure III-3-37. Open Channel Flow Profile Computation 433
Figure III-3-38. Direct Step Backwater Method – Example 434
Figure III-3-39. Mean Channel Velocity vs Medium Stone Weight (W50) and Equivalent Stone Diameter 438
Figure III-3-40. Riprap Gradation Curve 439
Figure III-3-41. Pipe/Culvert Outfall Discharge Protection 443
Figure III-3-42. Flow Dispersal Trench 444
Figure III-3-43. Alternative Flow Dispersal Trench 445
Figure III-3-44. Gabion Outfall Detail 446
Figure III-3-45. Diffuser TEE (an example of energy dissipating end feature) 447

Figure IV-4-1. Pressure Wash Water Recovery System 474
Figure IV-4-2. Drip Pan 484
Figure IV-4-3. Drip Pan Within Rails 485
Figure IV-4-4. Loading Dock with Door Skirt 487
Figure IV-4-5. Loading Dock with Overhang 487
Figure IV-4-6. Oil/Water Separator Layout 489
Figure IV-4-7. Covered Fuel Island 490

Figure IV-4-8. Surrounding Activities Containing Oversized Equipment 493
Figure IV-4-9. Enclose the Activity 518
Figure IV-4-10. Cover the Activity 518
Figure IV-4-11. Covered Storage Area for Bulk Solids (including berm if needed) 520
Figure IV-4-12. Material Covered with Plastic Sheeting 521
Figure IV-4-13. Secondary Containment Vessel 530
Figure IV-4-14. Locking System for Drum Lid 531
Figure IV-4-15. Covered and Bermed Containment Area 531
Figure IV-4-16. Mounted Container 531
Figure IV-4-17. Above-Ground Tank Storage 534
Figure IV-4-18. Hydrant Flushing 567
Figure IV-4-19. Examples of Covered Activities 573
Figure IV-4-20. Tarp Covering 574
Figure IV-4-21. Paved Area with Sump Drain 575
Figure IV-4-22. Above-Ground Tank with Impervious Walls and Floor 577
Figure IV-4-23. Containment Types 578
Figure IV-4-24. Standby Generator 579

Figure V-3-1. Flow Splitter, Option A 625
Figure V-3-2. Flow Splitter, Option B 626
Figure V-3-3. Flow Spreader Option A – Anchored Plate 628
Figure V-3-4. Flow Spreader Option B – Concrete Sump Box 629
Figure V-3-5. Flow Spreader Option C – Notched Curb Spreader 630
Figure V-3-6. Flow Spreader Option D – Through-Curb Ports 631
Figure V-5-7. Observation Well Details 649
Figure V-6-8. Sand Filtration Basin Preceded by Presettling Basin (Variation of a Basic Sand Filter) 651
Figure V-6-9. Sand Filter with a Pretreatment Cell (top view) 652
Figure V-6-10. Sand Filter with a Pretreatment Cell (side view) 653
Figure V-6-11. Sand Filter with Level Spreader (top view) 654
Figure V-6-12. Sand Filter with Level Spreader (side view) 655
Figure V-6-13. Sand Filter Vault (top view) 662
Figure V-6-14. Sand Filter Vault (side view) 663
Figure V-6-15. Linear Sand Filter 665
Figure V-7-16. Typical Swale Section 667
Figure V-7-17. Geometric Formulas for Common Swale Shapes 669
Figure V-7-18. The Relationship of Manning's n with VR for Various Degrees of Flow Retardance (A-E) 675
Figure V-7-19. Biofiltration Swale Underdrain Detail 677
Figure V-7-20. Biofiltration Swale Low-Flow Drain Detail 677
Figure V-7-21. Swale Dividing Berm 678

Figure V-7-22. Biofiltration Swale Access Features 682
Figure V-7-23. Typical Filter Strip 687
Figure V-7-24. Filter Strip Lengths for Narrow Right-of-Way 690
Figure V-8-25. Wetpond (top view) 693
Figure V-8-26. Wetpond (side view) 694
Figure V-8-27. Headwater Depth for Smooth Interior Pipe Culverts with Inlet Control 697
Figure V-8-28. Headwater Depth for Corrugated Pipe Culverts with Inlet Control 698
Figure V-8-29. Critical Depth of Flow for Circular Culverts 699
Figure V-8-30. Circular Channel Ratios 700
Figure V-8-31. Wetvault 709
Figure V-8-32. Stormwater Wetland – Option 1 717
Figure V-8-33. Stormwater Wetland – Option 2 718
Figure V-8-34. Combined Detention and Wetpond (top view) 721
Figure V-8-35. Combined Detention and Wetpond (side view) 722
Figure V-8-36. Alternative Configurations of Detention and Wetpool Areas 725
Figure V-9-37. API (Baffle Type) Separator 728
Figure V-9-38. Coalescing Plate Separator 729
Figure V-9-39. Spill Control Separator (not for oil treatment) 730
Figure V-D-40. Recommended Values of F for Various Values of v_H/Vt 747

Figure VI-2-1. Typical Dispersion Trench 756
Figure VI-2-2. Standard Dispersion Trench with Notched Grade Board 757
Figure VI-2-3. Typical Downspout Splashblock Dispersion 758
Figure VI-2-4. Typical Concentrated Flow Dispersion for Steep Driveways 760
Figure VI-2-5. Sheet Flow Dispersion for Driveways 762

Tables

Table I-D-1. Maintenance Standards 55
Table I-E-2. Water Quality Ranges Found in Study Wetlands 100

Table II-3-1. Temporary Erosion Control Seed Mix 152
Table II-3-2. Landscaping Seed Mix 152
Table II-3-3. Low-Growing Turf Seed Mix 152
Table II-3-4. Bioswale Seed Mix 152
Table II-3-5. Wet Area Seed Mix 153
Table II-3-6. Meadow Seed Mix 153
Table II-3-7. Mulch Standards and Guidelines 155
Table II-3-8. Materials on Hand 179
Table II-3-9. Storm Drain Inlet Protection 224
Table II-3-10. Geotextile Standards 237
Table II-3-11. Vegetated Strips 243
Table II-3-12. Sediment Trap Sizing 249
Table II-C-13. Sediment Trap Sizing 286
Table II-C-14. Temporary Erosion Control Seed Mix 289
Table II-C-15. Mulch Standards and Guidelines 290

Table III-1-1. BMP Designs in Western Washington 308
Table III-1-2. Runoff Curve Numbers for Selected Agricultural, Suburban and Urban Areas 311
Table III-2-3. Bioretention Soil Mix Aggregate Component 323
Table III-2-4. Sizing Table for Rain Gardens 325
Table III-2-5. Modeling Assumptions for Rain Garden Sizing 326
Table III-2-6. Infiltration Rate Reduction Factors to Account for Biofouling and Siltation Effects for Ponds 333
Table III-2-7. Recommended Infiltration Rates based on USDA Soil Textural Classification 340
Table III-2-8. Alternative Recommended Infiltration Rates Based on ASTM Gradation Testing 341
Table III-2-9. Correction Factors to be Used with In-Situ Infiltration Measurements to Estimate Long-Term Design Infiltration Rates 342
Table III-2-10. Permanent Surface Water Control Pond Sign Specifications 359
Table III-2-11. Plant Selection Guide 363
Table III-2-12. Values of Cd for Sutro Weirs 379
Table III-3-13. Percentage Impervious for Fully Developed Conditions Offsite Tributary Areas 389

Table III-3-14. Runoff Coefficients – “C” Values for the Rational Method 391
Table III-3-15. Coefficients for the Rational Method 392
Table III-3-16. Rainfall Intensities for the City of Auburn 393
Table III-3-17. “n” and “k” Values Used in Time Calculations for Hydrographs 395
Table III-3-18. Percentage Impervious for Modeling Fully Developed Conditions..... 397
Table III-3-19. Manning’s “n” Values for Pipes..... 400
Table III-3-20. Backwater Calculation Sheet Notes 404
Table III-3-21. Maximum Pipe Slopes, Velocities and Anchor Requirements 408
Table III-3-22. Allowable Structures and Pipe Sizes..... 408
Table III-3-23. Constants for Inlet Control Equations* 417
Table III-3 24. Entrance Loss Coefficients 423
Table III-3-25. Values of the Roughness Coefficient “n” 430
Table III-3-26. Channel Protection 431
Table III-3-27. Rock Protection at Outfalls 440
Table III-3-28. Additional Storm Drain Easement Widths 451
Table III-A-29. Design Storm Precipitation Values 452

Table IV-4-1. Uncovered Fuel Island Separator Sizing Requirements..... 491
Table IV-D-2. Typical TPH Levels in Street Sweeping and Catch Basin Solids..... 597
Table IV-D-3. Typical c-PAH Values in Street Waste Solids and Related Materials 598
Table IV-D-4. Typical Metals Concentrations in Catch Basin Sediments..... 598
Table IV-D-5. Recommended Parameters & Suggested Values for Determining Reuse & Disposal Options..... 599
Table IV-D-6. Recommended Sampling Frequency for Street Waste Solids 600
Table IV-D-7. Pollutants in Catch Basin Solids – Comparison to Dangerous Waste Criteria 600
Table IV-D-8. Typical Catch Basin Decant Values Compared to Surface Water Quality Criteria 601
Table IV-D-9. Typical Values for Conventional Pollutants in Catch Basin Decant 601
Table IV-D-10. Catch Basin Decant Values Following Settling 602

Table V-1-1. Screening Treatment Facilities Based on Soil Type 609
Table V-2-2. Treatment Trains for Phosphorus Removal 612
Table V-2-3. Treatment Trains for Enhanced Treatment..... 613
Table V-3-4. Treatment Facility Placement in Relation to Detention Facilities..... 618
Table V-3-5. Lining Types Recommended for Runoff Treatment Facilities 621
Table V-3-6. Acceptable Gradation for Compacted Till Liners 623
Table V-6-7. Sand Specifications..... 658
Table V-6-8. Clay Liner Specifications..... 658
Table V-7-9. Sizing Criteria 670
Table V-7-10. Stability Check Steps (SC) Guide for Selecting Degree of Retardance 674
Table V-7-11. Guide to Selecting Maximum Permissible Swale Velocities for Stability 675

Table V-7-12. Grass Seed Mixes Suitable for Biofiltration Swale Treatment Areas 680
Table V-7-13. Groundcovers & Grasses Suitable for the Upper Side Slopes of a Biofiltration Swale in Western Washington 680
Table V-7-14. Recommended Plants for Wet Biofiltration Swale 681
Table V-8-15. Emergent Wetland Species Recommended for Wetponds 706
Table V-8-16. Distribution of Depths in Wetland Cell 719
Table V-B-17. Correction Factors to be Used with In-Situ Infiltration Measurements to Estimate Long-Term Design Infiltration Rates 744
Table V-C-18. Geotextile Properties for Underground Drainage Survivability Properties (WSDOT 2008 Standard Specifications or most current version) 745
Table V-C-19. Geotextile for Underground Drainage Filtration Properties (WSDOT 2008 Standard Specifications or most current version) 745
Table V-C-20. Geotextile Strength Properties for Impermeable Liner Protection 746

Table VI-2-1. Bioretention Soil Mix Aggregate Component 774
Table VI-2-2. Sizing Table for Rain Gardens 777
Table VI-2-3. Modeling Assumptions for Rain Garden Sizing 778

Preface

This manual provides guidance on the measures necessary to control the quantity and quality of stormwater produced by new development and redevelopment. This guidance contributes to the protection of receiving waters and is in compliance with the Washington State Department of Ecology (Ecology) water quality standards. These water quality standards include:

- Chapter 173-200 WAC, Water Quality Standards for Groundwaters of the State of Washington
- Chapter 173-201A, Water Quality Standards for Surface Waters of the State of Washington
- Chapter 173-204, Sediment Management Standards

Objective

The objective of this manual is to establish minimum requirements for development and redevelopment projects of all sizes in the City of Auburn. It does this by providing guidance concerning how to prepare and implement stormwater site plans. The minimum requirements are satisfied by the application of Best Management Practices (BMPs). This manual is applicable to all types of land development – including residential, commercial, industrial, and roads.

This manual can also be helpful in identifying options for retrofitting BMPs at existing development sites where appropriate. In such situations, application of BMPs from this manual is encouraged. The City recognizes, however, that there can be site constraints that make the strict application of these BMPs difficult.

This manual is designed to be equivalent to Ecology's 2005 Stormwater Management Manual for Western Washington. Ecology considers its manual to include all known, available and reasonable methods of prevention, control, and treatment (AKART). Ecology's manual has no independent regulatory authority. However, Ecology has required as a condition of the City's General Permit for Discharges from Municipal Separate Storm Sewers, the adoption of stormwater program components that are the substantial equivalent to the minimum requirements found in Ecology's 2005 manual.

The primary reason for using BMPs is to protect beneficial uses of water resources through the reduction of pollutant loads and concentrations, and through reduction of discharges (volumetric flow rates) causing stream channel erosion. If it is found that, after the implementation of BMPs advocated in this manual, beneficial uses are still threatened or impaired, additional controls may be appropriate.

To accomplish these objectives the manual includes the following:

- ***Minimum Requirements*** that cover a range of issues, such as preparation of Stormwater Site Plans, pollution prevention during the construction phase of a project, control of potential pollutant sources, treatment of runoff, control of

stormwater flow volumes, protection of wetlands, and long-term operation and maintenance. The Minimum Requirements applicable to a project vary depending on the type and size of the proposed project.

- ***Best Management Practices (BMPs)*** that can be used to meet the minimum requirements. BMPs are defined as schedules of activities, prohibitions of practices, maintenance procedures, managerial practices, or structural features that prevent or reduce adverse impacts to waters of Washington State. BMPs are divided into those for short-term control of stormwater from construction sites, and those addressing long-term management of stormwater at developed sites. Long-term BMPs are further subdivided into those covering management of the volume and timing of stormwater flows, prevention of pollution from potential sources, and treatment of runoff to remove sediment and other pollutants.
- ***Guidance on how to prepare and implement Stormwater Site Plans*****.** The Stormwater Site Plan is a comprehensive report that describes existing site conditions, explains development plans, examines potential offsite effects, identifies applicable Minimum Requirements, and proposes stormwater controls for both the construction phase and long-term stormwater management. The project proponent submits the Stormwater Site Plan to the City of Auburn for review, and the City uses the plan to evaluate a proposed project for compliance with stormwater requirements.

It is not the intent of this manual to make the City of Auburn a guarantor or protector of public or private property with regard to land development activities.

Organization of this Manual

The Surface Water Management Manual is divided into six volumes:

- **Volume I** defines the geographic scope of the manual, provides the information on stormwater flow and quality control, and describes how to prepare and implement a Stormwater Site Plan.
- **Volume II** describes BMPs for short-term stormwater management at construction sites.
- **Volume III** covers hydrologic analysis and BMPs to control flow volumes from developed sites.
- **Volume IV** describes BMPs to minimize pollution generated by potential pollution sources at developed sites.
- **Volume V** presents BMPs to treat runoff that contains sediment or other pollutants from developed sites.
- **Volume VI** presents BMPs for low impact development.

A **Glossary** at the end of the manual defines terminology used in all six volumes. A list of **References** provides both source documentation and a list of additional information resources.

How to Use this Manual

This manual is designed for a variety of users.

- Project proponents should start by reviewing the minimum requirements described in Volume I. Volume I also describes a Stormwater Site Plan and provides guidance on how to develop this plan.
- City staff will use this manual to review Stormwater Site Plans, check BMP designs and provide technical advice to project proponents. City staff will also use this manual as a reference when designing public works projects. All development and redevelopment projects within the City of Auburn shall meet the requirements of this manual unless specifically exempted by this manual or the City Engineer.
- The City Engineer shall have authority to modify requirements to protect the health, safety or welfare of the public on the basis of information regarding threatened water quality, erosion problems or potential habitat destruction, flooding, protection of uninterruptible services, or endangerment to property. The City Engineer shall also have the authority to modify requirements based upon increases in requirements imposed by state or federal agencies, where existing requirements are not applicable to the particular site, or other pertinent factors.
- Permits may refer to this manual or the BMPs contained in this manual. In those cases, affected permit-holders or applicants should use this manual for specific guidance on how to comply with those permit conditions.

Where requirements in this manual are also mandated by any other law, ordinance, resolution, rule or regulation, the more restrictive requirement shall apply.

Note: Drawing and detail figures included throughout these volumes are intended for illustrative purposes only. Where any discrepancy exists between figure elements and specific design criteria, the design criteria shall take precedence.

Development of Best Management Practices (BMPs) for Stormwater Management

The method by which this manual controls the adverse impacts of development and redevelopment is through the application of Best Management Practices.

Best Management Practices (BMPs)

Best Management Practices are defined as schedules of activities, prohibitions of practices, maintenance procedures, and structural and/or managerial practices, that when used singly or in combination, prevent or reduce the release of pollutants and other adverse impacts to waters of Washington State. The types of BMPs are source control, treatment, and flow control. BMPs that involve construction of engineered structures are often referred to as facilities in this manual. For instance, the BMPs referenced in the menus of Chapter 2 in Volume 5 are called Treatment Facilities.

Source Control BMPs

Source control BMPs **prevent or reduce** pollution, or other adverse effects of stormwater, from occurring. In this manual, source control BMPs are classified as operational or structural. Examples of source control BMPs include methods as various as using mulches and covers on disturbed soil, putting roofs over outside storage areas, and berming areas to prevent stormwater run-on and pollutant runoff.

It is generally more cost-effective to use source controls to prevent pollutants from entering runoff than to treat runoff to remove pollutants.

Treatment BMPs

Treatment BMPs include facilities that **remove** pollutants by simple gravity settling of particulate pollutants, filtration, biological uptake, and soil adsorption. Treatment BMPs can accomplish significant levels of pollutant load reductions if properly designed and maintained.

Flow Control BMPs

Flow control BMPs typically control the rate, frequency, and flow duration of stormwater surface runoff. The need to provide flow control BMPs depends on whether a development site discharges to a stream system or wetland, either directly or indirectly. Stream channel erosion control can be accomplished by BMPs that detain runoff flows and also by those which physically stabilize eroding stream banks. Both types of measures may be necessary. Only the former is covered in this manual. The size of such a facility can be reduced by changing the extent to which a site is disturbed.

In regard to wetlands, it is necessary to not alter the natural hydroperiod. This means control of flows from a development such that the wetland is within certain elevations at different times of the year and short-term elevation changes are within the prescribed limits. If, however, the wetland was fed by local groundwater elevations during the dry season, the impervious surface additions and the bypassing practice may cause variations from the dry season elevations which might need mitigation.

The city has additional requirements that are related to surface water management, including wetlands, critical areas, and flood protection. Refer to the City of Auburn Code.

Related Documentation

Department of Ecology's Stormwater Management Manual

This manual was modeled after the Stormwater Management Manual for Western Washington, published by the Department of Ecology in February, 2005. Ecology's stormwater manual was originally developed in response to a directive of the Puget Sound Water Quality Management Plan (PSWQA 1987 et seq.). The Puget Sound Water Quality Authority (since replaced by the Puget Sound Partnership) recognized the need for overall guidance for stormwater quality improvement. It incorporated requirements in its plan to implement a cohesive, integrated stormwater management approach through the development and implementation of programs by local jurisdictions, and the development of rules, permits and guidance by Ecology.

The Puget Sound Water Quality Management Plan included a stormwater element (SW-2.1) requiring Ecology to develop a stormwater technical manual for use by local jurisdictions. Ecology's original stormwater manual (the Stormwater Management Manual for the Puget Sound Basin, published in 1992) was developed to meet this requirement. In the years hence Ecology updated its stormwater management guidance and requirements applicable to all of western Washington. Refer to Volume I, Appendix A for the regulatory requirements which support the relationship between the Auburn manual and Ecology's manual.

Applicable Federal, State and Local Regulatory Requirements

Refer to Volume I, Appendix A for all applicable federal, state, and local regulatory requirements for this manual.

- Endangered Species Act
- Section 401 Water Quality Certifications
- Puget Sound Water Quality Management Plan
- Ecology NPDES Program
- Hydraulic Project Approvals
- Aquatic Lands Use Authorizations
- Watershed/Basin Planning
- Total Maximum Daily Loads
- Underground Injection Control Authorization

THIS PAGE INTENTIONALLY LEFT BLANK.

Volume I – Stormwater Site Planning Table of Contents

Purpose of this Volume 7
Content and Organization of this Volume 7

Chapter 1 Development and Redevelopment Impacts 8

1.1 Hydrologic Changes 8
1.2 Water Quality Changes 8
1.3 Biological Changes 9

Chapter 2 Areas with Special Development Requirements 10

2.1 Groundwater Protection Area 2 10
2.2 Impaired Water Bodies 10
2.3 Floodplains 10

Chapter 3 Minimum Requirements for New Development and Redevelopment 11

3.1 Overview of the Minimum Requirements 11
3.2 Exemptions 12
3.2.1 Road Maintenance 12
3.2.2 Parking Lots and Parking Lot Maintenance 12
3.2.3 Underground Utility Projects 13
3.2.4 Minor Clearing and Grading 13
3.2.5 Emergencies 13
3.2.6 Key Terms 13
3.3 Applicability of the Minimum Requirements 14
3.3.1 New Development 17
3.3.2 Redevelopment 17
3.3.3 Assessed Value 18
3.3.4 Roads 18
3.3.5 Cumulative Impact Mitigation Requirement 19
3.4 Description of Minimum Requirements 21
3.4.1 Minimum Requirement #1: Preparation of a Stormwater Site Plan 21
3.4.1.1 Objective 21
3.4.2 Minimum Requirement #2: Construction Stormwater Pollution Prevention (SWPP) 21
3.4.2.1 Objective 22
3.4.3 Minimum Requirement #3: Source Control of Pollution 22

3.4.3.1 Objective 22
3.4.4 Minimum Requirement #4: Preservation of Natural Drainage Systems and Outfalls 23
3.4.4.1 Objective 23
3.4.5 Minimum Requirement #5: On-Site Stormwater Management 23
3.4.5.1 Objective 23
3.4.6 Minimum Requirement #6: Runoff Treatment 24
3.4.6.1 Thresholds 24
3.4.6.2 Treatment Facility Selection, Design, and Maintenance 24
3.4.6.3 Additional Requirements 24
3.4.6.4 Objective 24
3.4.6.5 Supplemental Guidelines 24
3.4.7 Minimum Requirement #7: Flow Control 25
3.4.7.1 Applicability 25
3.4.7.2 Thresholds 25
3.4.7.3 Standard Requirement 26
3.4.7.4 Infrastructure Protection Requirement 26
3.4.7.5 Objective 27
3.4.7.6 Modeling Requirements 27
3.4.8 Minimum Requirement #8: Wetlands Protection 27
3.4.8.1 Applicability 27
3.4.8.2 Thresholds 28
3.4.8.3 Standard Requirement 28
3.4.8.4 Additional Requirements 28
3.4.8.5 Objective 29
3.4.8.6 Supplemental Guidelines 29
3.4.9 Minimum Requirement #9: Operation and Maintenance 29
3.4.9.1 Objective 29
3.4.9.2 Supplemental Guidelines 29
3.4.10 Minimum Requirement #10: Off-Site Analysis and Mitigation 29
3.4.10.1 Qualitative Analysis: 30
3.4.10.2 Quantitative Analysis 30
3.4.10.3 Objective 30
3.5 Exceptions 30
Chapter 4 Preparation of Stormwater Site Plans 33
4.1 Stormwater Site Plan Outline 33
4.2 Plans Required After Stormwater Site Plan Approval 40
4.3 Land Use Submittal Requirements 40
Appendix A Regulatory Requirements 41
Appendix B Stormwater Site Plan Submittal Requirements Checklist 46
Appendix C Hydraulic Analysis Worksheet 53
Appendix D Maintenance Standards for Drainage Facilities 55
Appendix E Wetlands and Stormwater Management Guidelines 85

Volume

I

Volume I:
Stormwater Site Planning

Purpose of this Volume

This volume provides a discussion of the minimum requirements for stormwater management, and information and guidance for preparing a Stormwater Site Plan. This includes an overview of the impacts of development on water flow and quality, an overview of the affected watershed areas, procedures for preparing the plan, and information helpful for selecting BMPs and facilities for permanent stormwater management.

Content and Organization of this Volume

Volume I contains four chapters and five appendices.

- Chapter 1 describes the impacts of development and redevelopment on water flow and quality.
- Chapter 2 describes areas with special development requirements
- Chapter 3 defines the minimum requirements for stormwater management for development and redevelopment projects.
- Chapter 4 describes the Stormwater Site Plan, and provides step-by-step guidance for preparing the plan.
- Appendix A provides information about regulatory requirements.
- Appendix B provides a checklist of stormwater site plan submittal requirements.
- Appendix C provides a hydraulic analysis worksheet.
- Appendix D describes maintenance standards for drainage facilities.
- Appendix E describes guidelines for wetlands and stormwater management.

Chapter 1 Development and Redevelopment Impacts

1.1 Hydrologic Changes

As settlement occurs and the population grows, trees are logged and land is cleared for the addition of impervious surfaces such as rooftops, roads, parking lots, and sidewalks. Maintained landscapes that have much higher runoff characteristics typically replace the natural vegetation. The natural soil structure is also changed due to grading and compaction during construction. Roads are cut through slopes and low spots are filled. Drainage patterns are irrevocably altered. All of this can result in drastic changes in the natural hydrology, including:

- Increased volumetric flow rates of runoff
- Increased volume of runoff
- Decreased time for runoff to reach a natural receiving water
- Reduced groundwater recharge
- Increased frequency and duration of high stream flows and wetlands inundation during and after wet weather
- Reduced stream flows and wetlands water levels during the dry season
- Greater stream velocities
- Adverse impacts on existing City infrastructure and capacity

1.2 Water Quality Changes

Urbanization also can cause an increase in the types and quantities of pollutants in surface and groundwaters. Runoff from urban areas has been shown to contain many different types of pollutants, depending on the nature of the activities in those areas. The runoff from roads and highways can be contaminated with pollutants from vehicles. Oil and grease, polynuclear aromatic hydrocarbons (PAHs), lead, zinc, copper, cadmium, as well as sediments (soil particles) and road salts can be typical pollutants in road runoff. Runoff from industrial areas can contain many types of heavy metals, sediments, and a broad range of man-made organic pollutants, including phthalates, PAHs, and other petroleum hydrocarbons. Residential areas can contribute the same road-based pollutants to runoff, as well as herbicides, pesticides, nutrients (from fertilizers), bacteria, and viruses (from animal waste). All of these contaminants can seriously impair beneficial uses of receiving waters.

Regardless of the eventual land use conversion, the sediment load produced by a construction site can turn the receiving waters turbid and be deposited over the natural sediments of the receiving water. The addition of sediment loads also impacts existing City systems, causing localized flooding and increases in the cost and frequency of maintenance.

Urbanization can cause changes in water temperature. Heated stormwater from impervious surfaces and exposed treatment and detention ponds may discharge to streams with less riparian vegetation for shade. Urbanization also reduces groundwater recharge, which reduces sources of cool groundwater inputs to streams. In winter, stream temperatures may lower due to loss of riparian cover. There is also concern that the replacement of warmer groundwater inputs with colder surface runoff during colder periods may have biological impacts.

1.3 Biological Changes

Hydrologic and water quality changes can result in changes to the biological systems that were supported by the natural hydrologic system. In particular, aquatic life is greatly affected by urbanization. Habitats are altered when a stream changes its physical configuration and substrate due to increased flows. Natural riffles, pools, gravel bars and other areas can be altered or destroyed. These and other alterations produce a habitat structure that is very different from the one in which the resident aquatic life evolved.

The biological communities in wetlands also can be severely impacted and altered by the hydrological changes. Relatively small changes in the natural water elevation fluctuations can cause dramatic shifts in vegetative and animal species composition.

Chapter 2 Areas with Special Development Requirements

This chapter identifies geographic areas within the City of Auburn and the requirements specific to those areas. Theses requirements shall be in addition to the minimum requirements found in Chapter 3 of this volume unless the text in this chapter specifically indicates that the area-specific requirement supersedes or replaces a minimum requirement.

2.1 Groundwater Protection Area 2

In 2005, the City of Auburn adopted the Critical Areas Ordinance, ACC 16.10 which formally designates Groundwater Protection Areas within the City of Auburn. Groundwater Protection Zone 2 represents the land area in the central part of the city beneath which the principal aquifer used by the city for water supply is overlain by highly permeable sand and gravel deposits. These geologic conditions provide a direct pathway for contaminants that may be released to the soil to reach the aquifer.

Private infiltration systems used in Groundwater Protection Zone 2 that receive stormwater from any pollution-generating surfaces including streets, parking areas, or galvanized roofs are prohibited unless in the opinion of the Public Works Department no other reasonable alternative exists. In such case, the Public Works Department may approve a private disposal system. Design shall meet all requirements of the Public Works Department. Additional water quality measures may also be required.

To request infiltration of pollution-generating surfaces in Groundwater Protection Zone 2, a formal request for exception shall be submitted per Section 3.5 for review and approval.

2.2 Impaired Water Bodies

Section 305(b) of the Clean Water Act (CWA) requires the Department of Ecology to prepare a report every two years on the status of the overall condition of the state's waters. Section 303(d) of the CWA requires Ecology to prepare a list every two years containing water bodies not expected to meet state surface water quality standards after implementation of technology-based controls. The State is then required to complete a Total Maximum Daily Load (TMDL) for all water on that list. The existing list and other related information is available on Ecology's water quality website:

http://www.ecy.wa.gov/programs/wq/links/wq_assessments.html

If a project site discharges to one of these listed waterbodies, additional treatment or flow control requirements may apply.

2.3 Floodplains

Floodplains are not regulated through the Surface Water Management Manual. However, surface water facilities proposed within flood plains will be reviewed on a case-by-case basis to determine if the facilities are acceptable. Additional analysis and requirements may be needed for surface water facilities located within flood plains.

Chapter 3 Minimum Requirements for New Development and Redevelopment

This Chapter identifies the minimum requirements for stormwater management applicable to new development and redevelopment sites. These requirements are codified in Chapter 13.48 of the Auburn City Code (ACC). New development and redevelopment projects also may be subject to other City code requirements, depending on the nature and location of the project. These code requirement may include, but are not limited to, the subdivision and land use permit procedures in Titles 17 and 14 ACC; excavation and grading and off-site improvement Chapter 15.74 ACC; driveway control Chapter 12.20 ACC; groundwater protection, Chapter 8.08 ACC; shoreline regulation, Chapter 16.08 ACC; and critical areas preservation Chapter 16.10 ACC.

These requirements are intended to provide for and promote the health, safety and welfare of the general public, and are not intended to create or otherwise establish or designate any particular class or group of persons who will or should be especially protected or benefited by the provisions of this chapter.

3.1 Overview of the Minimum Requirements

The Minimum Requirements are:

1. Preparation of Stormwater Site Plans
2. Construction Stormwater Pollution Prevention
3. Source Control of Pollution
4. Preservation of Natural Drainage Systems and Outfalls
5. On-site Stormwater Management
6. Runoff Treatment
7. Flow Control
8. Wetlands Protection
9. Operation and Maintenance

The City also has one additional requirement beyond those required in Ecology's 2005 manual:

10. Off-Site Analysis and Mitigation

Depending on the type and size of the proposed project, different combinations of these minimum requirements apply. In general, small sites are required to control erosion and sedimentation from construction activities and to apply simpler approaches to treatment and flow control of stormwater runoff from the developed site. Large sites must provide erosion and sedimentation control during construction and permanent control of stormwater runoff from the developed site.

Section 3.4 provides additional information on applicability of the Minimum Requirements to different types of sites.

This manual is designed to be equivalent to Ecology's 2005 Stormwater Management Manual for Western Washington. Ecology considers its manual to include all known, available, and reasonable methods of prevention, control, and treatment (AKART). Ecology's manual has no independent

regulatory authority. However, Ecology has required as a condition of the City's General Permit for Discharges from Municipal Separate Storm Sewers, the adoption of stormwater program components that are the substantial equivalent to the minimum requirements found in Ecology's 2005 manual.

The minimum requirements of this Chapter are conditions of the City's stormwater NPDES permit, and are required under Auburn City Code, Chapter 13.48 *Storm Drainage Utility.*

3.2 Exemptions

The following classes of projects have exemption from the minimum requirements. All other new development or redevelopment projects are subject to one or more of the Minimum Requirements (see Section 3.4).

3.2.1 Road Maintenance

The following road maintenance practices are exempt:

- pothole and square cut patching
- overlaying existing asphalt or concrete pavement with asphalt or concrete without expanding the area of coverage
- shoulder grading
- reshaping/regrading drainage systems
- crack sealing
- resurfacing with in-kind material without expanding the road prism
- vegetation maintenance

3.2.2 Parking Lots and Parking Lot Maintenance

Parking lots are considered pollution generating impervious surfaces and must comply with all relevant BMPs per the Minimum Requirements. Parking lot surfacing material requirements are regulated through the City's Land Use code. Parking lots must provide a design to control and manage surface water per the minimum requirements. No special consideration will be given to "temporary" parking areas as the impacts resulting from the proposed impervious surface must be mitigated as part of the construction.

The following parking lot maintenance practices are exempt:

- pothole and square cut patching
- overlaying existing asphalt or concrete pavement with asphalt or concrete without expanding the area of coverage
- crack sealing
- catch basin, pipe and vegetation maintenance

3.2.3 Underground Utility Projects

Underground utility projects that replace the ground surface with in-kind material or materials with similar runoff characteristics are only subject to Minimum Requirement #2, Construction Stormwater Pollution Prevention.

3.2.4 Minor Clearing and Grading

The following minor clearing and grading activities are exempt from all the Minimum Requirements except for Minimum Requirement #2; unless located within a critical or sensitive area governed by the City's Critical Areas Ordinance. Information on Critical Areas is available through the City of Auburn Planning Department.

- Excavation for wells, except that fill made with the material from such excavation shall not be exempt;
- Exploratory excavations under the direction of soil engineers or engineering geologists, except that fill made with the material from such excavation shall not be exempt;
- Removal of hazardous trees;
- Removal of trees or other vegetation which cause sight distance obstructions at intersections;
- Minor clearing and grading associated with cemetery graves;
- Land clearing associated with routine maintenance by public utility agencies, as long as appropriate vegetation management practices are followed as described in the Best Management Practices of the Regional Road Maintenance Endangered Species Act Program Guidelines located at http://www.wsdot.wa.gov/maintenance/roadside/esa.htm

3.2.5 Emergencies

Emergency projects which, if not performed immediately would substantially endanger life or property, are exempt only to the extent necessary to meet the emergency. Emergency activities may include but are not limited to: sandbagging, diking, ditching, filling, or similar work during or after periods of extreme weather. Permits authorizing the emergency work may be required after completion of the emergency project.

3.2.6 Key Terms

A few key words to be aware of pertaining to the requirements that follow are:

- Arterial
- Effective Impervious Surface
- Impervious Surface
- Land Disturbing Activity

- Maintenance
- Native Vegetation
- New Development
- Pollution-Generating Impervious Surface (PGIS)
- Pollution Generating Pervious Surfaces (PGPS)
- Pre-Developed Conditions
- Project Site
- Receiving Waters
- Redevelopment
- Replaced Impervious Surface
- Site
- Source Control BMP
- Threshold Discharge Area.

The definition of these and other stormwater-related words and phrases used in this manual are provided in the Glossary.

3.3 Applicability of the Minimum Requirements

NOTE: Throughout this section, **requirements are written in bold print.** Supplemental guidelines that serve as advice and other materials are not bolded.

Not all of the Minimum Requirements apply to every development or redevelopment project. The applicability varies depending on the type and size of the project. This section Identifies thresholds that determine the applicability of the Minimum Requirements to different projects. The thresholds shall be determined using the proposed improvements for the entire project site.

The flow charts in Figure I-3-1, Figure I-3-2, and Figure I-3-3, can be used to determine which requirements apply. The Minimum Requirements themselves are presented in Section 3.4.

Flow credits as outlined in Volume VI are used when determining project thresholds.

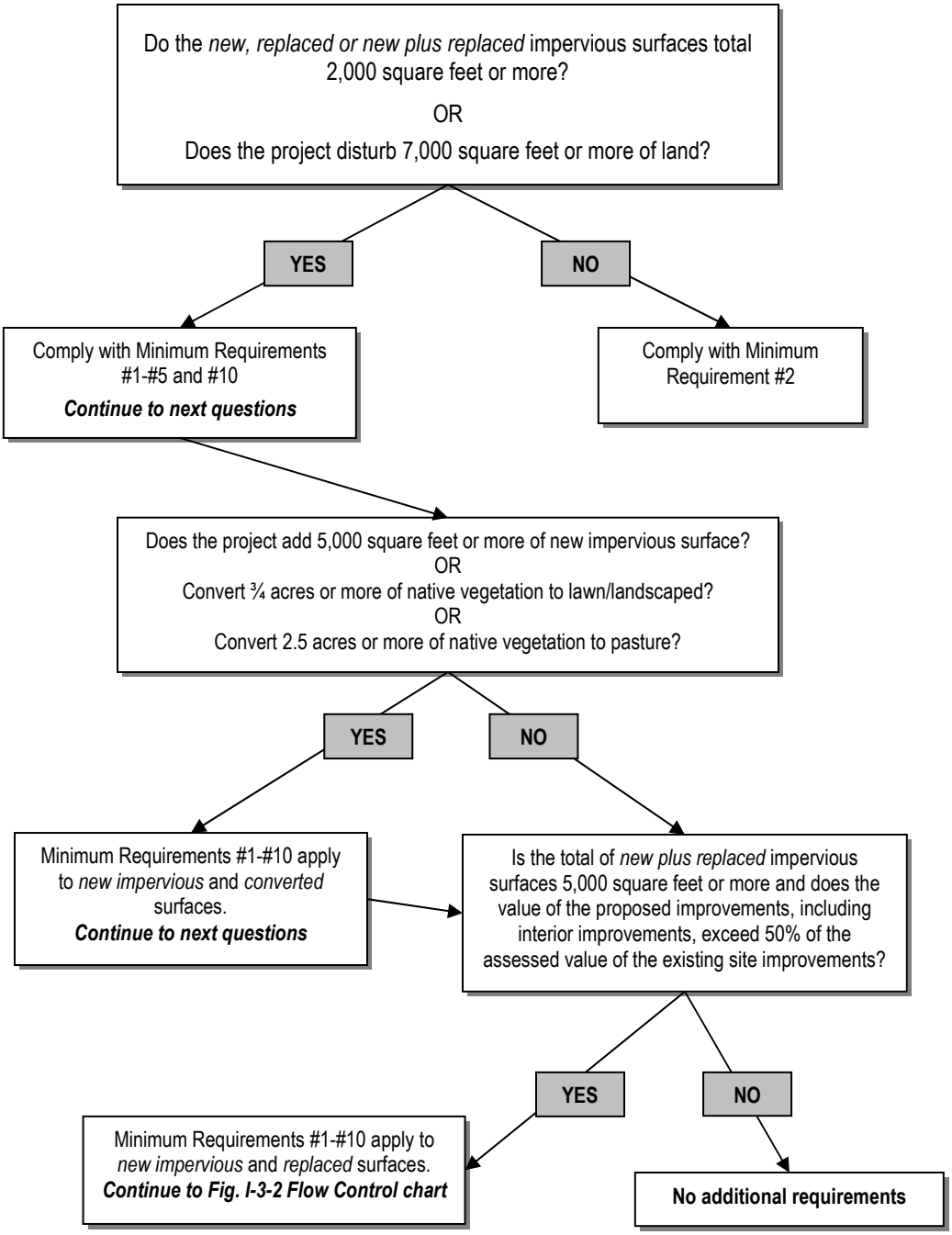

Figure I-3-1. Determining Minimum Requirements for New and Redevelopment Project Sites

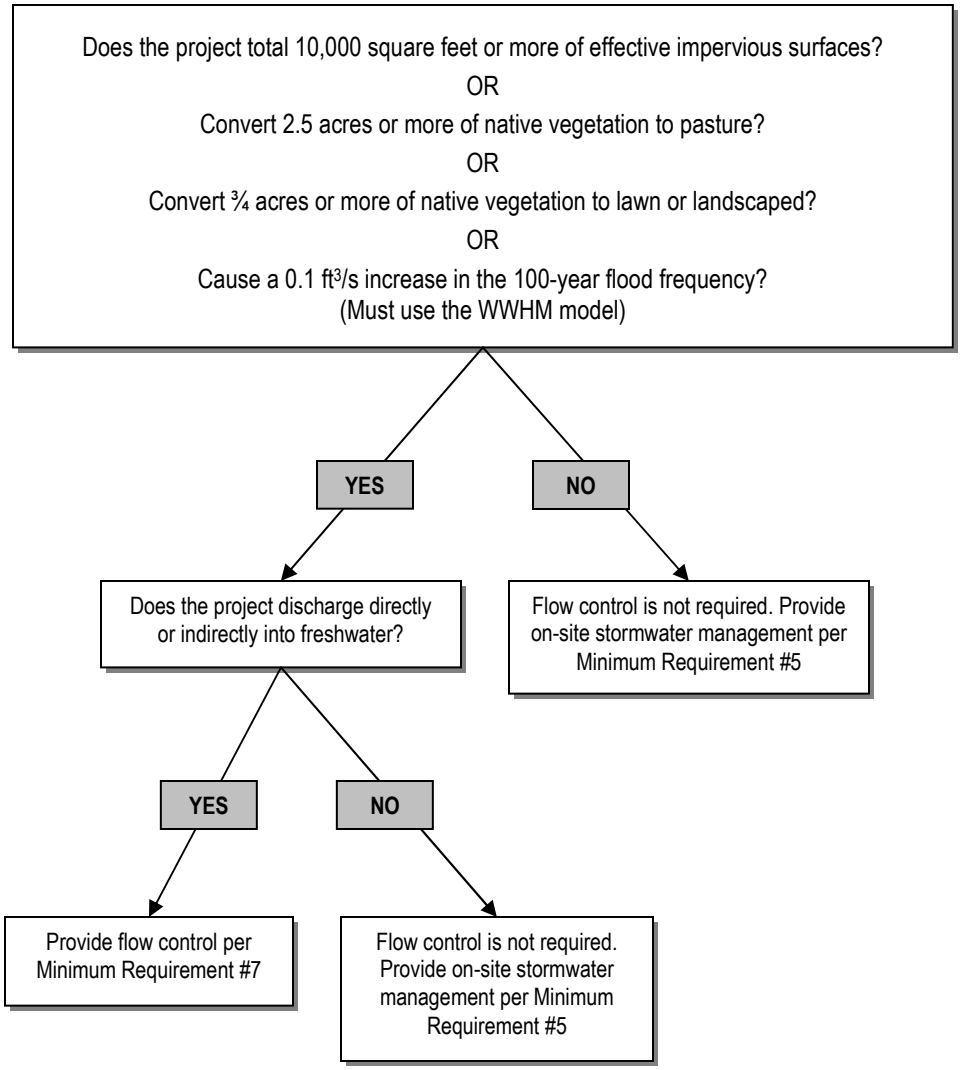

Figure I-3-2. Determining Minimum Requirements for Flow Control

3.3.1 New Development

All new development shall be required to comply with Minimum Requirement #2.

The following new development shall comply with Minimum Requirements #1 through #5 for the new and replaced impervious surfaces and the land disturbed:

- **Creates or adds 2,000 square feet, or greater, of new, replaced, or new plus replaced impervious surface area, or**
- **Has land disturbing activity of 7,000 square feet or greater.**

The following new development shall comply with Minimum Requirements #1 through #10 for the new impervious surfaces and the converted pervious surfaces.

- **Creates or adds 5,000 square feet , or more, of new impervious surface area, or**
- **Converts ¾ acres, or more, of native vegetation to lawn or landscaped areas, or**
- **Converts 2.5 acres, or more, of native vegetation to pasture.**

3.3.2 Redevelopment

Redevelopment is development on a site that is already substantially developed (i.e., has 35% or more existing impervious surface coverage). See the Glossary at the back of this manual for definitions.

Redevelopment projects have the same requirements as new development projects in order to minimize the impacts from new surfaces. To encourage redevelopment projects, replaced surfaces are not required to be brought up to new stormwater standards unless the thresholds noted in Section 3.3.3 are exceeded. As long as the replaced surfaces have similar pollution-generating potential, the amount of pollutants discharged should not be significantly different. However, if the redevelopment project scope is sufficiently large such that the thresholds noted in Section 3.3.3 are exceeded, it is reasonable to require the replaced surfaces to be brought up to current stormwater standards. This is consistent with other utility standards. When a structure or a property undergoes significant remodeling, local governments often require the site to be brought up to new building code requirements (e.g., onsite sewage disposal systems, fire systems).

All redevelopment shall be required to comply with Minimum Requirement #2. In addition, all redevelopment that exceeds certain thresholds shall be required to comply with additional Minimum Requirements as follows.

The following redevelopment shall comply with Minimum Requirements #1 through #5 for the new and replaced impervious surfaces and the land disturbed:

- **The new, replaced, or total of new plus replaced impervious surfaces is 2,000 square feet or more, or**
- **7,000 square feet or more of land disturbing activities.**

In addition to meeting Minimum Requirements #1 through #5, the following redevelopment shall comply with Minimum Requirements #6 through #10 for the new impervious surfaces and converted pervious areas:

- **Adds 5,000 square feet or more of *new* impervious surfaces or,**
- **Converts ¾ acres, or more, of native vegetation to lawn or landscaped areas, or**
- **Converts 2.5 acres, or more, of native vegetation to pasture.**

If the runoff from the new impervious surfaces and converted pervious surfaces is not separated from runoff from other surfaces on the project site, the stormwater treatment facilities must be sized for the entire flow that is directed to them. The City may allow the Minimum Requirements to be applied to an equivalent area (flow and pollution characteristics) within the same site. For public road projects, the equivalent area does not have to be within the project limits, but must drain to the same receiving water within the watershed.

3.3.3 Assessed Value

Other types of redevelopment projects shall comply with all the Minimum Requirements for the new and replaced impervious surfaces if the total of new plus replaced impervious surfaces is 5,000 square feet or more, and the valuation of proposed improvements (materials plus labor to construct) – including interior improvements – exceeds 50% of the assessed value of the existing site improvements as determined from the latest available building valuation data published by the International Code Council, available at http://www.iccsafe.org/cs/techservices/index.html .

3.3.4 Roads

For road-related projects, runoff from the replaced and new impervious surfaces (including pavement, shoulders, curbs, driveways, and sidewalks) shall meet all the Minimum Requirements if the new impervious surfaces total 5,000 square feet or more and total 50% or more of the existing impervious surfaces within the site (see Figure I-3-3). The site shall be defined by the length of the project and the width of the right-of-way. For the purposes of this manual, public roads (off-site improvements) required as part of a private project will be considered part of the threshold area determination for the minimum requirements.

The following road maintenance practices are considered redevelopment. The extent to which the manual applies is explained for each circumstance.

- Removing and replacing a paved surface to base course or lower, or repairing the roadway base: If impervious surfaces are not expanded, Minimum Requirements #1 - #5 apply. However, in most cases, only Minimum Requirement #2, Construction Stormwater Pollution Prevention, will be germane. Where appropriate, project proponents are encouraged to look for opportunities to use permeable and porous pavements.

- Extending the pavement edge without increasing the size of the road prism, or paving graveled shoulders: These are considered new impervious surfaces and are subject to the minimum requirements that are triggered when the thresholds identified for redevelopment projects are met.
- Resurfacing by upgrading from dirt to gravel, asphalt, or concrete; upgrading from gravel to asphalt or concrete; or upgrading from a bituminous surface treatment ("chip seal") to asphalt or concrete. These are considered new impervious surfaces and are subject to the minimum requirements that are triggered when the thresholds identified for redevelopment projects are met.

3.3.5 Cumulative Impact Mitigation Requirement

The determination of thresholds for a project site shall be based on the total increase or replacement of impervious surfaces that occurred after adoption of the 2009 SWMM. Under this provision, the City will consider the cumulative impacts of all permits issued on or after February 16, 2010. The combined total of new or replaced surfaces will be applied to the thresholds that determine applicability of the Minimum Requirements.

The intent of this Cumulative Impact Mitigation Requirement is to adequately mitigate the stormwater from improvements on a project site that are submitted under separate permits. The separate submittals could have project areas that do not meet the thresholds, but would meet the thresholds if the projects were combined as one project.

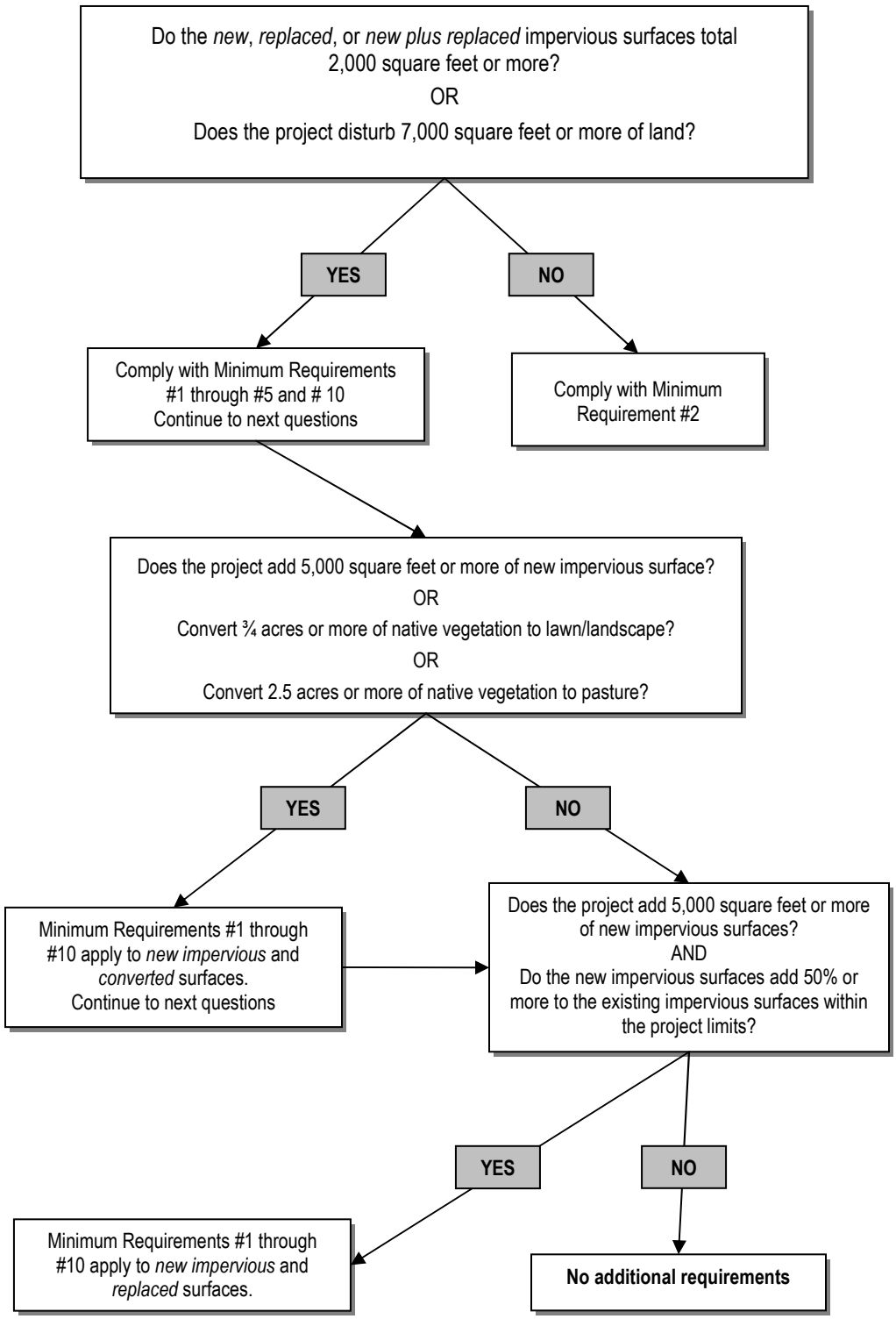

Figure I-3-3. Determining Minimum Requirements for Road-Related Projects

3.4 Description of Minimum Requirements

NOTE: Throughout this Section, **guidance to meet requirements is written in BOLD.** Supplemental guidelines that serve as advice and other materials are not written in bold.

This section describes the minimum requirements for stormwater management at new development and redevelopment sites. Consult Section 3.3 to determine which requirements apply to any given project.

Volumes II through VI of this manual present Best Management Practices (BMPs) for use in meeting the Minimum Requirements.

3.4.1 Minimum Requirement #1: Preparation of a Stormwater Site Plan

All projects meeting the thresholds in Section 3.3 shall prepare a Stormwater Site Plan for local government review. Stormwater Site Plans shall be prepared in accordance with Chapter 4 of this volume.

A Stormwater Site Plan consists of an assessment of both temporary and permanent stormwater and drainage impacts and may include a construction stormwater pollution prevention plan, when required by Minimum Requirement #2.

3.4.1.1 Objective

To outline the existing and post-developed conditions of the project site, describe the proposed stormwater facilities, and present the stormwater analysis.

3.4.2 Minimum Requirement #2: Construction Stormwater Pollution Prevention (SWPP)

All new development and redevelopment shall comply with Construction SWPP Elements #1 through #12. A full description of these elements can be found in Volume II, Chapter 2.

Projects which meet or exceed the thresholds of Volume I, Section 3.3 must prepare a Construction Stormwater Pollution Prevention Plan (SWPPP) as part of the Stormwater Site Plan (see Section 3.4.1). Each of the twelve elements must be considered and included in the Construction SWPPP unless site conditions render the element unnecessary and the exemption from that element is clearly justified in the narrative of the SWPPP.

The City has developed a Construction SWPPP Short Form for projects that:

- **Add or replace between 2,000 and 5,000 square feet of impervious surface, or**
- **Clear or disturb between 7,000 square feet and 1 acre of land.**

The SWPPP Short Form is intended to take the place of the Construction SWPPP. A Certified Erosion and Sediment Control Lead (CESCL) is not required for those projects using the City's Construction SWPPP Short Form.

For all other projects requiring a Construction SWPPP, a CESCL shall be identified in the Construction SWPPP and shall be on-site or on-call at all times. CESCLs must be trained through an Ecology approved training program found at: http://www.ecy.wa.gov/programs/wq/stormwater/cescl.htm

Unless located in a Critical Area, projects that add or replace less than 2,000 square feet of impervious surface or disturb less than 7,000 square feet of land are not required to prepare a Construction SWPPP, but must consider all of the twelve Elements of Construction Stormwater Pollution Prevention (SWPP) and develop controls for all elements that pertain to the project site.

SWPP Elements are:

Element 1: **Mark Clearing Limits**
Element 2: **Establish Construction Access**
Element 3: **Control Flow Rates**
Element 4: **Install Sediment Controls**
Element 5: **Stabilize Soils**
Element 6: **Protect Slopes**
Element 7: **Protect Drain Inlets**
Element 8: **Stabilize Channels and Outlets**
Element 9: **Control Pollutants**
Element 10: **Control De-Watering**
Element 11: **Maintain BMPs**
Element 12: **Manage the Project**

These Elements are described in detail in Volume II.

3.4.2.1 Objective

The purpose of construction SWPP is to control erosion and prevent sediment and other pollutants from leaving the site during the construction phase of a project.

3.4.3 Minimum Requirement #3: Source Control of Pollution

All known, available, and reasonable source control BMPs shall be applied to all projects. Source control BMPs shall be selected, designed, and maintained according to this manual. Structural source control BMPs shall be identified in the stormwater site plan and shall be shown on construction plans submitted for City review.

Source Control BMPs include Operational BMPs and Structural Source Control BMPs. See Volume IV for design details of these BMPs. For construction sites, see Volume II, Chapter 3.

3.4.3.1 Objective

The intent of source control BMPs is to prevent stormwater from coming in contact with pollutants. They are a cost-effective means of reducing pollutants in stormwater, and, therefore, should be a first consideration in all projects.

3.4.4 Minimum Requirement #4: Preservation of Natural Drainage Systems and Outfalls

Natural drainage patterns shall be maintained, and discharges from the project site shall occur at the natural location, to the maximum extent practicable. The manner by which runoff is discharged from the project site must not cause a significant adverse impact to downstream receiving waters and downgradient properties. All outfalls require energy dissipation.

As part of a submittal, the applicant shall identify the location of natural drainage, topography, historic drainage information and any potential impacts.

3.4.4.1 Objective

To preserve and utilize natural drainage systems to the fullest extent because of the multiple stormwater benefits these systems provide; and to prevent erosion at and downstream of the discharge location.

3.4.5 Minimum Requirement #5: On-Site Stormwater Management

Projects shall employ, where feasible and appropriate, On-site Stormwater Management BMPs to infiltrate, disperse, and retain stormwater runoff onsite to the maximum extent feasible without causing flooding, erosion, water quality or groundwater impacts. All projects required to comply with Minimum Requirement #5 shall employ all of the following BMPs as applicable:

- **Roof Downspout Control BMPs, functionally equivalent to those described in Volume III, Section 2.1, and**
- **Dispersion, functionally equivalent to those described in Volume VI, Section 2.2, and**
- **Soil Quality BMPs, functionally equivalent to those in Volume VI, Section 2.2.1.4.**

Where roof downspout controls are planned, the following three types shall be considered in descending order of preference:

- **Downspout infiltration systems including rain gardens (Volume III, Section 2.1.2 and Section 2.1.4, and Volume VI, Section 2.2.3).**
- **Downspout dispersion systems (Volume III, Section 2.1.3), only if infiltration is not feasible.**
- **Collect and convey to City system (Volume III, Section 2.1.5) if other alternatives are not feasible.**

3.4.5.1 Objective

To use inexpensive practices on individual properties to reduce the amount of disruption of the natural hydrologic characteristics of the site

3.4.6 Minimum Requirement #6: Runoff Treatment

3.4.6.1 Thresholds

The following require construction of stormwater treatment facilities:

- **Projects in which the total of effective pollution-generating impervious surface (PGIS) is 5,000 square feet or more in a threshold discharge area of the project, or**
- **Projects in which the total of pollution-generating pervious surfaces (PGPS) is three-quarters (3/4) of an acre or more in a threshold discharge area, and from which there is a surface discharge in a natural or man-made conveyance system from the site.**

Total effective pollution-generating impervious surface shall include all new plus replaced PGIS. That portion of any development project in which the above PGIS or PGPS thresholds are not exceeded in a threshold discharge area shall apply On-site Stormwater Management BMPs, where feasible, in accordance with Minimum Requirement #5.

3.4.6.2 Treatment Facility Selection, Design, and Maintenance

Stormwater treatment facilities shall be:

- **Selected in accordance with the process identified in Volume V, Chapter 1;**
- **Designed in accordance with the design criteria in Volume V; and**
- **Maintained in accordance with the maintenance standards in Volume I, Appendix D that shall be incorporated in the design as part of a facility operation and maintenance manual.**

3.4.6.3 Additional Requirements

- **Direct discharge of untreated stormwater from pollution-generating surfaces above the thresholds given in Section 3.4.6.1 to groundwater is prohibited.**
- **Infiltration of any amount of PGS is not allowed within the Groundwater Protection Zone 2 unless approved in writing per Volume I, Section 2.1.**

3.4.6.4 Objective

The purpose of runoff treatment is to reduce pollutant loads and concentrations in stormwater runoff using physical, biological, and chemical removal mechanisms so that beneficial uses of receiving waters are maintained and, where applicable, restored. When site conditions are appropriate, infiltration can potentially be the most effective BMP for runoff treatment.

3.4.6.5 Supplemental Guidelines

The above thresholds apply to both a project's on-site and off-site improvements. Once the project is required to meet this minimum requirement, all new and replaced pollution generating impervious surfaces are required to provide treatment. No net or average is permitted between non-pollution generating surfaces and pollution generating.

NOTE: With respect to Water Quality, a "net" total of pollution generating impervious surface will not be considered when dealing with replaced impervious surfaces. Construction of new surfaces that do not generate pollution does not balance the environmental impacts of newly created pollution generating surfaces. All new or redeveloped pollution generating surfaces that meet the thresholds for new and redevelopment and create, add and/or replace 5,000 square feet pollution generating impervious surface shall provide water quality.

See Volume V for more detailed guidance on selection, design, and maintenance of treatment facilities.

3.4.7 Minimum Requirement #7: Flow Control

3.4.7.1 Applicability

Projects must provide flow control to reduce the impacts of stormwater runoff from impervious surfaces and land cover conversions. Portions of projects discharging to a wetland shall also be subject to Minimum Requirement #8.

<u>The flow control requirement thresholds apply to projects that discharge directly or indirectly:</u>

- **Through a conveyance system, into fresh water; or**
- **Through a conveyance system into a gulch; or**
- **To a City identified capacity problem existing downstream of the development; or**
- **To a manmade conveyance system (ditch, swale, etc.) which has not been adequately stabilized to prevent erosion; or**
- **To a conveyance system without capacity to convey the fully developed design event as defined in Volume III, Chapter 3.**

3.4.7.2 Thresholds

Projects that meet or exceed the following thresholds require construction of flow control facilities and/or land use management BMPs.

- **Project sites in which the total of effective impervious surfaces is 10,000 square feet or more in a threshold discharge area, or**
- **Projects that convert ¾ acres or more of native vegetation to lawn or landscape, or convert 2.5 acres or more of native vegetation to pasture in a threshold discharge area, and from which there is a surface discharge in natural or man-made conveyance system from the site, or**
- **Projects that, through a combination of effective impervious surfaces and converted pervious surfaces, cause a 0.1 cfs increase in the 100-year flow frequency from a threshold discharge area as estimated using the Western Washington Hydrology Model or other approved model. Comparison will be between existing and proposed site conditions.**

That portion of any development project in which the thresholds listed above are not exceeded in a threshold discharge area, shall apply Onsite Stormwater Management BMPs in accordance with Minimum Requirement #5. Refer to Figure I-3-1, Figure I-3-2 and Figure I-3-3 to aid in determining project requirements.

3.4.7.3 Standard Requirement

Using WWHM for design, stormwater discharges shall match developed discharge durations to pre-developed durations for the range of pre-developed discharge rates from 50% of the 2-year peak flow up to the full 50-year peak flow. The pre-developed condition to be matched shall be a forested land cover. The pre-developed soil types shall be assumed as either outwash (Hydrologic Soil Group A/B) or till (Hydrologic Soil Group C/D) soils, depending on supporting geotechnical information. Saturated soil conditions shall only be considered when determining existing wetland hydrology.

This standard requirement is waived for sites that will reliably infiltrate all the runoff from impervious surfaces and converted pervious surfaces.

<u>Any areas for which the minimum thresholds are not exceeded must still meet the following criteria:</u>

- **The project must be drained by a conveyance system with capacity to convey the fully developed design event as defined in Volume III, Chapter 3. The conveyance system must consist entirely of manmade conveyance elements (e.g., pipes, ditches, outfall protection, etc.) and extend to the ordinary high water line of the receiving water; and**
- **Any erodible elements of the manmade conveyance system must be adequately stabilized to prevent erosion under future build-out conditions from areas that contribute flow to the system; and**
- **No City identified capacity problems may exist downstream of the development; and**
- **Surface water flows from the area must not be diverted from or increased to an existing wetland, stream, or near-shore habitat sufficient to cause a significant adverse impact.**

3.4.7.4 Infrastructure Protection Requirement

The infrastructure protection requirement is intended to mitigate stormwater impacts from projects that are not required to provide flow control, but discharge to a system with capacity limitations such as projects with the following characteristics:

- **Inadequate capacity in downstream conveyance.**

Applicant may resolve the downstream capacity problem or may provide on-site detention. Where detention is provided, stormwater discharges for the developed condition shall match the discharges under existing conditions.

3.4.7.5 Objective

To prevent increases in the stream channel erosion rates that are characteristic of natural conditions (i.e., prior to the European settlement). The standard intends to maintain the total amount of time that a receiving stream exceeds an erosion-causing threshold based upon historic rainfall and natural land cover conditions. That threshold is assumed to be 50% of the 2-year peak flow. Maintaining the naturally occurring erosion rates within streams is vital, though by itself insufficient, to protect fish habitat and production.

3.4.7.6 Modeling Requirements

To meet the Standard Requirement, the applicant shall use the most current software version of the Department of Ecology's Western Washington Hydrology Model (WWHM) model (see Volume III). Alternative models for sizing flow control and water quality facilities may be considered, provided they are Washington State Department of Ecology equivalent, and approved by the City of Auburn. Approval from the City shall be obtained prior to submittal of design documents.

To meet the Downstream Analysis requirements, piped conveyance systems shall be modeled using either continuous simulation or single event methods. Stream systems shall be modeled using only continuous simulation methods.

The designer shall provide a copy of the completed hydrology analysis worksheet (Appendix C) and a copy of the electronic project files.

NOTE: Hand-calculated hydrographs and flow routing will no longer be accepted because of the wide availability of various software programs.

3.4.8 Minimum Requirement #8: Wetlands Protection

Wetlands are regulated by the City of Auburn through this requirement and the Critical Areas Code, Auburn City Code 16.10. For more information about wetlands, wetland permits and development close to wetlands, please contact the Planning, Building & Community Department at (253) 931-3090.

3.4.8.1 Applicability

Stormwater discharges to wetlands are regulated under the City's Critical Areas Ordinance (ACC 16.10).

The requirements below are in addition to requirements given in ACC 16.10 and apply only to projects whose stormwater discharges into a wetland, either directly or indirectly through a conveyance system. These requirements must be met <u>in addition</u> to meeting Minimum Requirement #6, Runoff Treatment. All pollution generating surfaces discharging to wetlands shall require water quality treatment prior to discharge to the wetlands. Streams may also be regulated under this requirement as part of the wetland permit.

3.4.8.2 Thresholds

When either of the thresholds identified in Minimum Requirement #6 – Runoff Treatment, or Minimum Requirement #7 – Flow Control are met or exceeded, this requirement shall also be applied.

3.4.8.3 Standard Requirement

Discharges to wetlands shall maintain the hydrologic conditions, hydrophytic vegetation, and substrate characteristics necessary to support existing and designated uses. The hydrologic analysis shall use the existing land cover condition to determine the existing hydrologic conditions unless directed otherwise by a regulatory agency with jurisdiction. A wetland can be considered for hydrologic modification and/or stormwater treatment in accordance with Guidesheet 1B in Appendix E. Modeling shall be completed with a continuous simulation model. Model calibration and pre- and post-development monitoring of wetland levels, groundwater levels, and water quality may be required by the City.

3.4.8.4 Additional Requirements

The standard requirement does not excuse any discharge from the obligation to apply whatever technology is necessary to comply with state water quality standards, Chapter 173-201A WAC, or state groundwater standards, Chapter 173-200 WAC. Additional treatment requirements to meet those standards may be required by federal, state, or local governments.

Stormwater treatment and flow control facilities shall not be constructed within a natural vegetated buffer, except for:

- **Necessary conveyance systems as approved by the City; or**
- **As allowed in wetlands approved for hydrologic modification and/or treatment in accordance with Guidesheet 1B in Appendix E of this Volume.**

Flow splitting devices or drainage BMPs must be applied to route natural runoff volumes from the project site to any downstream stream or wetland.

Design of flow splitting devices or drainage BMPs will be based on continuous hydrologic modeling analysis. The design will assure that flows delivered to stream reaches will approximate, but in no case exceed, durations ranging from 50% of the 2-year to the 50-year peak flow.

Flow splitting devices or drainage BMPs that deliver flow to wetlands shall be designed using continuous hydrologic modeling to preserve pre-project wetland hydrologic conditions unless specifically waived or exempted by regulatory agencies with permitting jurisdiction;

An adopted and implemented basin plan, or a Total Maximum Daily Load (TMDL, also known as a Water Clean-up Plan) may be used to develop requirements for wetlands that are tailored to a specific basin.

3.4.8.5 Objective

To ensure that wetlands receive the same level of protection as any other waters of the state. Wetlands are extremely important natural resources which provide multiple stormwater benefits, including groundwater recharge, flood control, and stream channel erosion protection. They are easily impacted by development unless careful planning and management are conducted. Wetlands can be severely degraded by stormwater discharges from urban development due to pollutants in the runoff and also due to disruption of natural hydrologic functioning of the wetland system. Changes in water levels and the frequency and duration of inundations are of particular concern.

3.4.8.6 Supplemental Guidelines

Appendix E contains guidance for wetlands when interacting with stormwater. **The City of Auburn may require applicants to utilize portions or all of the guidance in analyzing and mitigating wetland impacts.**

3.4.9 Minimum Requirement #9: Operation and Maintenance

An operation and maintenance manual that is consistent with the provisions in Section 4.1 of this Volume shall be provided for all proposed stormwater facilities and BMPs at the time construction plans are submitted for review, and the party (or parties) responsible for maintenance and operation shall be identified.

For private facilities, a copy of the manual shall be retained onsite or within reasonable access to the site, and shall be transferred with the property to the new owner. For private systems serving multiple lots within residential developments or other developments, a separate covenant or other guarantee of proper maintenance that can be recorded on title shall be provided and recorded. For public facilities, a copy of the manual shall be retained in the appropriate department.

For all facilities (public and private), a log of maintenance activity that indicates what actions were taken shall be kept and be available for inspection by the City.

3.4.9.1 Objective

To ensure that stormwater control facilities are adequately maintained and operated properly.

3.4.9.2 Supplemental Guidelines

Inadequate maintenance is a common cause of failure for stormwater control facilities. The description of each BMP in Volumes II, III, V, and VI includes a section on maintenance. Appendix D of Volume I includes a schedule of maintenance standards for drainage facilities.

3.4.10 Minimum Requirement #10: Off-Site Analysis and Mitigation

As required by the Minimum Requirements of this Chapter, development projects that discharge stormwater offsite shall submit as part of their Stormwater Site Plan and Report an off-site analysis that assesses the potential off-site impacts of stormwater discharge.

All projects shall perform a *qualitative* analysis downstream from the site.

The City may require a quantitative analysis for any project deemed to need additional downstream information.

3.4.10.1 Qualitative Analysis:

Project applicants shall submit a *qualitative* analysis of each upstream system entering a site (run-on) and each downstream system leaving a site (run-off). The qualitative analysis shall extend downstream for the entire flow path, from the project site to the receiving water, or up to one-quarter mile, whichever is less. The upstream analysis shall identify and describe points where water enters the site and the tributary area. A basin map defining the onsite and offsite basins tributary to the site shall be provided. The basin map shall be to a defined scale.

Upon review of this analysis, the City may require a qualitative analysis further downstream, mitigation measures deemed adequate to address the problems, or a quantitative analysis, depending upon the presence of existing or predicted flooding, erosion, or water quality problems, and on the proposed design of the onsite drainage facilities. Details on how to perform this analysis are located in Volume I, Chapter 4 and Volume I, Appendix B.

3.4.10.2 Quantitative Analysis

The City may require a *quantitative* analysis for any project deemed to need additional downstream information. Details on how to perform this analysis are located in Volume III, Section 3.1.2.

3.4.10.3 Objective

To identify and evaluate offsite water quality, erosion, slope stability, and drainage impacts that may be caused or aggravated by a proposed project, and to determine measures for preventing impacts and for not aggravating existing impacts. Aggravated shall mean increasing the frequency of occurrence and/or severity of a problem. Some of the most common and potentially destructive impacts of land development are erosion of downgradient properties, localized flooding, and slope failures. These are caused by increased surface water volumes and changed runoff patterns. The City believes taking the precautions of offsite analysis could prevent substantial property damage and public safety risks. In addition the applicant will evaluate types and locations of surface run-on to the project site. These must be safely conveyed across the project site.

3.5 Exceptions

NOTE: Throughout this Section, **guidance to meet the requirements is written in BOLD.** Supplemental guidelines that serve as advice and other materials are not written in bold.

Deviations from the Minimum Requirements may be requested, in writing, in accordance with ACC 13.48.226 to allow a waiver of a requirement, a reduction or modification of a requirement, or to permit an alternative requirement. Public notice of application for a deviation, draft decision, and written findings will be published in accordance with ACC 13.48.226, with an opportunity for public comment. Deviations must meet the following criteria:

- **The minimum requirements would impose a severe and unexpected economic hardship; and**

- **The deviation will not increase risk to the public health and welfare, nor injurious to other properties in the vicinity and/or downstream, and to the quality of waters of the state; and**

- **The deviation is the least possible exception that could be granted to comply with the intent of the Minimum Requirements.**

In accordance with ACC 13.48.226, the City Engineer may grant a deviation following a documented finding that:

The deviation is likely to be equally protective of public health, safety and welfare, the environment, and public and private property, as the requirement from which an exception is sought.

OR

Substantial reasons exist under ACC 13.48.226 C., for approving the requested deviation and the deviation will not cause significant harm. The substantial reasons may include, but are not limited to:

- **The requirement to be imposed is not technically feasible; or**
- **An emergency situation necessitates approval of the deviation; or**
- **No reasonable use of the property is possible unless the deviation is approved; or**
- **The requirement would cause significant harm or a significant threat of harm to public health, safety and welfare, the environment, or to public and private property, or would cause extreme financial hardship which substantially outweighs its benefits.**

The decision to grant a deviation is within the sole discretion of the City, and the City Engineer shall only approve a deviation to the extent it is necessary. The City Engineer may impose new or additional requirements to offset or mitigate harm that may be caused by approving the deviation. The City Engineer may require the applicant to submit a licensed engineer's report or analysis along with a request, in writing, for a deviation. Deviations are intended to maintain necessary flexible working relationship between the City and applicants.

The approval of a deviation shall not be construed to be an approval of any violation of any of the other provisions of the City's Municipal Code, or of any other valid law of any governmental entity having jurisdiction.

Applications for a deviation from the Minimum Requirements of ACC13.48.225 must be in writing and include the following information:

- **The current (pre-project) use of the site, and**

- **How the application of the minimum requirement(s) restricts the proposed use of the site compared to the restrictions that existed prior to the adoption of the minimum requirements; and**

- **The possible remaining uses of the site if the deviation were not granted; and**

- **The uses of the site that would have been allowed prior to the adoption of the minimum requirements; and**

- **A comparison of the estimated amount and percentage of value loss as a result of the minimum requirements versus the estimated amount and percentage of value loss as a result of requirements that existed prior to adoption of the minimum requirements; and**

- **The feasibility for the owner to alter the project to apply the minimum requirements.**

Chapter 4 Preparation of Stormwater Site Plans

The Stormwater Site Plan is the comprehensive report containing all of the technical information and analysis necessary for the City to evaluate a proposed new development or redevelopment project for compliance with stormwater requirements. Contents of the Stormwater Site Plan will vary with the type and size of the project, and individual site characteristics. The scope of the Stormwater Site Plan also varies depending on the applicability of Minimum Requirements (see Section 3.4). However, typical Stormwater Site Plans will contain both a report and detailed plans.

This chapter describes the contents of a Stormwater Site Plan and provides a general procedure for how to prepare the plan. The goal of this chapter is to provide a framework for uniformity in plan preparation. Such uniformity will promote predictability and help secure prompt review. Properly drafted engineering plans and supporting documents will also facilitate the operation and maintenance of the proposed system long after construction is complete.

To aid the design engineer, a checklist containing submittal requirements is located in Appendix B and a hydraulic analysis worksheet is provided in Appendix C. These appendices should be completed and provided by the design engineer. These documents will be utilized by the City during the project review.

Stormwater Site Plans shall be prepared by a licensed Professional Engineer. All Stormwater Site Plans and drawings shall be signed, stamped, and dated prior to review by the City.

4.1 Stormwater Site Plan Outline

The Stormwater Site Plan (SSP) encompasses the entire submittal to the City for drainage review. This section provides an outline for a SSP and details drawing requirements.

Chapter 1 - Project Overview

The project overview must provide a general description of the project, pre-developed and developed conditions of the site, site area, and size of the improvements, and the pre- and post-developed stormwater runoff conditions. The overview shall summarize difficult site parameters, the natural drainage system, and drainage to and from adjacent properties, including bypass flows.

The vicinity map shall clearly locate the property, identify all roads bordering the site, show the route of stormwater off-site to the local natural receiving water, and show significant geographic features and sensitive/critical areas (streams, wetlands, lakes, steep slopes, etc.).

Include a list of other necessary permits and approvals as required by other regulatory agencies, if those permits or approvals include conditions that affect the drainage plan, or contain more restrictive drainage-related requirements.

Chapter 2 – Existing Conditions Summary

Collect and review information on the existing site conditions, including topography, drainage patterns, soils, ground cover, presence of any critical areas, adjacent areas, existing development, existing stormwater facilities, and adjacent on- and off-site utilities. Analyze data to determine site limitations including:

- Areas with high potential for erosion and sediment deposition (based on soil properties, slope, etc.); and
- Locations of sensitive and critical areas (e.g. vegetative buffers, wetlands, steep slopes, floodplains, geologic hazard areas, streams, etc.).
- Points where existing surface water enters and exits the project site.

Delineate these areas on the vicinity map and/or a site map. Prepare an Existing Conditions Summary that will be submitted as part of the Site Plan. Part of the information collected in this step should be used to help prepare the Construction Stormwater Pollution Prevention Plan.

Chapter 3 – Off-Site Analysis – Minimum Requirement # 10

The existing or potential impacts to be evaluated and mitigated as part of any off-site/downstream analysis shall include:

- Conveyance system capacity problems;
- Localized flooding;
- Aquatic habitat (wetlands) impacts;
- FEMA flood plain;
- Upland erosion impacts, including landslide hazards;
- Stream channel erosion at the outfall location;
- Impacts to surface water, groundwater, or sediment quality as identified in a Basin Plan or TMDL (Water Clean-up Plan);
- Locations where surface water enters and exits the site.

Qualitative Analysis:

Project applicants shall submit a *qualitative* analysis of each upstream system entering a site (run-on) and each downstream system leaving a site (run-off). The qualitative analysis shall extend downstream for the entire flow path, from the project site to the receiving water, or up to one-quarter mile, whichever is less. The upstream analysis shall identify and describe points where water enters the site and the tributary area. A basin map defining the onsite and offsite basins tributary to the site shall be provided. The basin map shall be to a defined scale.

Upon review of this analysis, the City may require a qualitative analysis further downstream, mitigation measures deemed adequate to address the problems, or a quantitative analysis, depending upon the presence of existing or predicted flooding, erosion, or water quality problems, and on the proposed design of the onsite drainage facilities. Details on how to perform this analysis are located in Volume I, Appendix B.

Quantitative Analysis:

The City may require a *quantitative* analysis for any project deemed to need additional downstream information. Details on how to perform this analysis are located in Volume III, Section 3.1.2.

The off-site analysis shall extend downstream of the site for a minimum of ¼ mile from the point of connection to the existing public drainage system, or until a trunk main is reached.

Chapter 4 – Permanent Stormwater Control Plan

The Permanent Stormwater Control Plan consists of those stormwater control BMPs and facilities that will serve the project site in its developed condition.

A preliminary design of the BMPs and facilities is necessary to determine how they will fit within and serve the entire preliminary development layout. After a preliminary design is developed, the designer may want to reconsider the site layout to reduce the need for construction of facilities, or the size of the facilities by reducing the amount of impervious surfaces created and increasing the areas to be left undisturbed. After the designer is satisfied with the BMP and facilities selections, the information must be presented within a Permanent Stormwater Control Plan.

Where modeling is completed, the City may require the model files be provided electronically.

The Permanent Stormwater Control Plan should contain the following sections:

1. Threshold Discharge Areas and Applicable Requirements for Treatment, Flow Control and Wetlands Protection

Complete the following tasks:

A. Read the definitions in the Glossary located at the back of this manual for the following terms: effective impervious surface, impervious surface, pollution-generating impervious surface (PGIS), pollution-generating pervious surface (PGPS), threshold discharge area, project site, and replaced impervious surfaces.

B. Outline the threshold discharge areas for your project site.

C. Determine the amount of effective pollution-generating impervious surfaces and pollution –generating pervious surfaces in each threshold discharge area. Compare those totals to the categories in Section 3.4.6 to determine where treatment facilities are necessary. Note that On-site Stormwater Management BMPs are always applicable.

D. Determine the amount of effective impervious surfaces and converted pervious surfaces in each threshold discharge area. Using an approved continuous runoff simulation model, estimate the increase in the 100-year flow frequency within each threshold discharge area.

E. Compare those totals to the categories in Section 3.4.7 to determine where flow control facilities are necessary. Note that On-site Stormwater Management BMPs may alter the calculation of effective impervious surface. See Volume VI for WWHM flow credit information.

2. Pre-developed Site Hydrology

The acreage, soil types, and land covers used to determine the pre-developed flow characteristics, along with basin maps, graphics, and exhibits for each sub-basin affected by the project should be included.

Provide a topographic map, of sufficient scale and contour intervals to determine basin boundaries accurately, and show:

- Delineation and acreage of areas contributing runoff to the site;
- Flow control facility location;
- Outfall;
- Overflow route; and
- All natural streams and drainage features.

The direction of flow, acreage of areas contributing drainage, and the limits of development should be indicated. Each basin within or flowing through the site should be named and model input parameters referenced, as appropriate.

If stormwater facilities that require sizing are proposed, provide a listing of assumptions and site parameters used in analyzing the pre-developed site hydrology.

For projects requiring flow control, the pre-developed condition to be matched shall be a forested land cover unless reasonable, historic information is provided that indicates the site was prairie prior to settlement.

3. Developed Site Hydrology

All Projects:

Total of impervious surfaces, total pollution-generating impervious surfaces, total pollution-generating pervious surfaces, and total disturbed area must be tabulated for each threshold discharge area. These are needed to verify which minimum requirements apply to a project.

Projects and Threshold Discharge Areas within Projects That Require Treatment and Flow Control Facilities:

Provide narrative, mathematical, and graphic presentations of model input parameters selected for the developed site condition, including acreage, soil types, and land covers, road layout, and all drainage facilities. The applicant shall reference sources for all variables and equations. All submissions shall be in typed format with a table of contents and labels for all figures and calculations. If calculations are used from other sections of the submittal, they shall be referenced with the appropriate, section and page number to the point of their original derivation.

Previous stormwater reports may be referenced. The City may request submission of all reference reports in their entirety.

Developed basin areas and flows shall be shown on a map and cross-referenced to computer printouts or calculation sheets. Developed basin flows should be listed and tabulated.

Any documents used to determine the developed site hydrology should be included. Maintain the same basin name as used for the pre-developed site hydrology. If the boundaries of a basin have been modified by the project, that should be clearly shown on a map and the name modified to indicate the change.

Final grade topographic maps shall be provided including finished floor elevations, where appropriate.

4. Performance Standards and Goals

If treatment facilities are proposed, provide a listing of the water quality menus used (Chapter 2 of Volume V). If flow control facilities are proposed, provide a confirmation of the flow control standard being achieved (e.g., the Ecology flow duration standard).

5. Flow Control System

Provide a drawing of the flow control facility and its appurtenances. This drawing must show basic measurements necessary to calculate the storage volumes available from zero to the maximum head, all orifice/restrictor sizes and head relationships, control structure/restrictor placement, and placement on the site.

Include computer printouts, calculations, equations, references, storage/volume tables, graphs as necessary to show results and methodology used to determine the storage facility volumes. Where the Western Washington Hydrology Model is used, its documentation files shall be submitted electronically.

6. Water Quality System

Provide a drawing of the proposed treatment facilities, and any structural source control BMPs. The drawing must show overall measurements and dimensions, placement on the site, location of inflow, bypass, and discharge systems.

Include computer printouts, calculations, equations, references, and graphs as necessary to show the facilities are designed in accordance with the requirements and design criteria in Volume V.

If using a manufactured system provide a specification from the manufacturer as well as all design specific parameters.

7. Conveyance System Analysis and Design

Present an analysis of any existing conveyance systems, and the analysis and design of the proposed stormwater conveyance system for the project. Portions of this analysis may include the criteria established in Item 3 above. This information should be presented in a clear, concise manner that can be easily followed, checked, and verified. All pipes, culverts, catch basins, channels, swales, and other stormwater conveyance appurtenances must be clearly labeled and correspond directly to the engineering plans. The analysis should be based on the design elements within the City of Auburn Engineering Design and Construction Standards and Volume III, Chapter 3 of this manual.

Chapter 5 – Discussion of Minimum Requirements

Provide a list of the minimum requirements that apply to the project site. Indicate where in the Stormwater Site Plan the documentation showing how the minimum requirements are satisfied can be found.

Appendix A – Operation and Maintenance (O & M) Manual

The O&M manual shall be designed as a stand-alone document, including all necessary figures and maps. The document may be submitted as either an Appendix to the SSP or bound separately.

Submit an operations and maintenance manual for each permanent stormwater facility. The manual shall contain a description of the facility, what it does, and how it works. The manual must identify and describe the maintenance tasks, and the required frequency of each task. The maintenance tasks and frequencies must meet the standards established in this manual.

Include a recommended format for a maintenance activity log. The log will have space to list maintenance activities.

The manual must prominently indicate where it shall be kept, and that it must be made available for inspection by the City. Specifically the manual will include:

Statements:

- Where the O&M manual shall be kept.
- That the O&M manual must be made available for inspection by the City.
- Name of the person or organization responsible for maintenance of the on-site storm system, including the phone number of the current responsible party.

Descriptions of:

- Each flow control and treatment facility, what it does, how it works, and maintenance tasks and frequency
- Operation and Maintenance Guidelines from the manufacturer of any proprietary flow control and treatment facility.

Sample forms:

- A summary sheet of the required inspection and maintenance frequencies for each specific facility (catch basins, ponds, vaults)
- A recommended format for a maintenance activity log that will indicate what maintenance actions have been taken for each flow control and treatment facility
- Relevant maintenance checklists from Appendix D of Volume 1 of the SWMM.

Figures and/or maps:

- An 11" x 17" map of the site, with the locations of the flow control and treatment facilities prominently noted.

Appendix B – Construction Stormwater Pollution Prevention Plan

This is the plan described in Section 3.4.2 and Volume II.

Appendix C – Submittal Requirements Checklist

A copy of the checklist can be found in Volume I, Appendix B and shall be completed by the engineer.

Appendix D – Hydraulic Analysis Worksheet

A copy of the worksheet can be found in Volume I, Appendix C and shall be completed by the engineer.

Appendix E – Other Special Reports

In this Appendix, include any special reports and studies conducted to prepare the Stormwater Site Plan (e.g. soil testing, wetlands delineation).

4.2 Plans Required After Stormwater Site Plan Approval

Follow the plan approval process given in the Chapters 2 and 3 of the City of Auburn Engineering Design Standards Manual.

4.3 Land Use Submittal Requirements

A reference to the subdivision checklists will be inserted here.

Appendix A Regulatory Requirements

This appendix contains the regulatory requirements that apply to applicable sites and their stormwater discharges.

Relationship of this Manual to Federal, State, and Local Regulatory Requirements

This manual is modeled after Ecology's 2005 Stormwater Management Manual for Western Washington. Ecology considers its manual to include all known, available, and reasonable methods of prevention, control, and treatment (AKART; RCW 90.48.010). Within Auburn, Ecology's manual has no independent regulatory authority except where Ecology directly requires or issues permits. The City of Auburn currently is regulated under a General Permit for Discharges from Municipal Separate Storm Sewers, effective February 16, 2007. Under federal regulations, Auburn is required to obtain coverage under this permit, and the permit is expected to require the adoption of stormwater program components that are the substantial equivalent to the minimum requirements found in Ecology's 2005 stormwater manual for western Washington. Upon adoption, Auburn will use this manual in issuing permits and other authorizations for development.

The Puget Sound Water Quality Management Plan

The current Puget Sound Water Quality Management Plan (the Plan), adopted in 2000 by the Puget Sound Action Team (PSAT), is a voluntary plan that calls for every city and county in the Puget Sound Basin to develop and implement a comprehensive stormwater management program. The Plan recognizes that stormwater programs will vary among jurisdictions, depending on the jurisdiction's population, density, threats posed by stormwater, and results of watershed planning efforts. Under the Plan, cities and counties are encouraged to form intergovernmental cooperative agreements in order to pool resources and carry out program activities more efficiently. More information about what the Plan contains can be found in Chapter 1 of Ecology's Manual, and a complete copy of the Plan can be downloaded from the PSAT website.

Phase II - Ecology's NPDES and State Waste Discharge Stormwater Permits for Municipalities

Auburn is subject to permitting under the U.S. Environmental Protection Agency (EPA) Phase II Stormwater Regulations (40 CFR Part 122) under the Clean Water Act National Pollutant Discharge Elimination System (NPDES) provisions. In Washington State, administration of the NPDES program is delegated to the Department of Ecology. In Western Washington, Ecology has issued joint NPDES and State Waste Discharge permits to regulate the discharges of stormwater from the municipal separate storm sewer systems operated by small municipal permittees.

Requirements arising out of Auburn's municipal stormwater permit are incorporated into this manual.

Ecology's State Waste Discharge Permits for Direct Discharges

The requirements imposed under the Phase II EPA Stormwater Regulations apply to discharges to Auburn's municipal stormwater system. However, the regulations do not apply to "direct discharges," that is, discharges that do not enter the City's system but go directly into receiving waters such as creeks or rivers.

Direct discharges are subject to permitting under Ecology's State Waste Discharge Permit program in Chapter 90.48 RCW.

Ecology's Industrial Stormwater Permit (i.e. NPDES and State Waste Discharge Baseline General Permit for Stormwater Discharges Associated With Industrial Activities)

This is a statewide permit for facilities conducting industrial activities. Most industrial facilities that discharge stormwater to a surface water body or to a municipal storm sewer system require permit coverage. Existing and new facilities for private entities, state, and local governments are required to have coverage. For a complete list of industrial categories identified for coverage, see Ecology's website or the permit itself. Ecology can also require permit coverage of any facility on a case-by-case basis in order to protect waters of the state. As above, direct discharges from industrial activities are subject to permitting under Ecology's State Waste Discharge Permit program in Chapter 90.48 RCW.

Ecology's Construction Stormwater Permit (i.e. NPDES and State Waste Discharge General Permit for Stormwater Discharges Associated With Construction Activity)

Coverage under Ecology's Construction General Permit is required for any clearing, grading, or excavating that will disturb one or more acres of land area and that will discharge stormwater from the site into surface water(s), or into storm drainage systems that discharge to a surface water. The permit requires:

- Application of stabilization and structural practices to reduce the potential for erosion and the discharge of sediments from the site. The stabilization and structural practices cited in the permit are similar to the minimum requirements for sedimentation and erosion control in Volume II of this manual.
- Construction sites within the Puget Sound basin to select from BMPs described in Volume 2 of the most recent edition of Ecology's Stormwater Management Manual (SWMM) that has been available at least 120 days prior to the BMP selection.

If local government requirements for construction sites are at least as stringent as Ecology's, Ecology will accept compliance with the local requirements. Accordingly, projects subject to Auburn's permitting authority that are also required to obtain coverage under Ecology's NPDES Construction Permit should be designed in accordance with Auburn's manual.

The permit is also required for projects or construction activities that disturb less than one acre of land area, if the project or activity is part of a larger common plan of development or sale that will ultimately disturb one or more acres of land area. The "common plan" in a common plan of development or sale is broadly defined as any announcement or piece of documentation (including a sign, public notice or hearing, sales pitch, advertisement, drawing, permit application, zoning request, computer design, etc.) or physical demarcation (including boundary signs, lot stakes, surveyor markings, etc.) indicating construction activities may occur on a specific plot.

The permit is not required for routine maintenance that is performed to maintain the original line and grade, hydraulic capacity, or original purpose of the site. For example, re-grading a dirt road or cleaning out a roadside drainage ditch to maintain its "as built" state does not require permit coverage.

Any construction activity discharging stormwater that Ecology and/or the City determine to be a "significant contributor of pollutants" to waters of the state may also be required to apply for and obtain permit coverage regardless of project size.

Applicants for coverage under the Construction General Permit must do the following:

- File a Notice of Intent (application for coverage). The permit application, called a Notice of Intent (NOI), shall be submitted to Ecology before the date of the first public notice and at least 38 days prior to the start of construction.
- Publish a Public Notice. At the time of application, the applicant must publish a notice that they are seeking coverage under Ecology's general stormwater permit for construction activities. This notice must be published at least once each week for two consecutive weeks in a single newspaper that has general circulation in the county in which the construction is to take place. Refer to the NOI instructions for public notice language requirements. State law requires a 30-day public comment period prior to permit coverage; therefore, permit coverage will not be granted sooner than 31 days after the date of the last public notice. Applicants who discharge surface water associated with construction activity to a storm drain operated by the City of Auburn are also required to submit a copy of the NOI to the municipality.
- Prepare a Construction Stormwater Pollution Prevention Plan. Permit coverage will not be granted until the permittee has indicated completion of the SWPPP or certified that development of a SWPPP in accordance with Special Condition S9 of the permit will occur prior to the commencement of construction. The construction SWPPP prepared using the City's manual will satisfy both the Ecology permit and City of Auburn permits.

Endangered Species Act

With the listing of multiple species of salmon as threatened or endangered across much of Washington state, and the probability of more listings in the future, implementation of the requirements of the Endangered Species Act will have a dramatic effect on urban stormwater management. The manner in which that will occur is still evolving. Provisions of the Endangered Species Act that may apply directly to stormwater management include the Section 4(d) rules, Section 7 consultations, and Section 10 Habitat Conservation Plans (50 CFR).

Section 401 Water Quality Certifications

For projects that require a fill or dredge permit under Section 404 of the Clean Water Act, Ecology must certify to the permitting agency, the U.S. Army Corps of Engineers, that the proposed project will not violate state water quality standards. In order to make such a determination, Ecology may do a more specific review of the potential impacts of a stormwater discharge from the construction phase of the project and from the completed project. As a result of that review, Ecology may condition its certification to require:

- Application of the minimum requirements and BMPs in Ecology's manual; or
- Application of more stringent requirements.

Hydraulic Project Approvals (HPAs)

Under Chapter 77.55 RCW, the Hydraulics Act, the Washington State Department of Fish and Wildlife has the authority to require actions when stormwater discharges related to a project would change the natural flow or bed of state waters. The implementing mechanism is the issuance of a Hydraulic Project Approval (HPA) permit.

Aquatic Lands Use Authorizations

The Washington State Department of Natural Resources (DNR), as the steward of public aquatic lands, may require a stormwater outfall to have a valid use authorization, and to avoid or mitigate resource impacts under authority of Chapter 79.90 through 96 RCW, and in accordance with Chapter 332-30 WAC.

Requirements Identified through Watershed/Basin Planning or Total Maximum Daily Loads

A number of the requirements of this manual can be superseded or modified by the adoption of ordinances and rules to implement the recommendations of watershed plans or basin plans.

Requirements in this manual can also be superseded or added to through the adoption of specific actions and requirements identified in a Waste Load Allocation or cleanup plan that implements a Total Maximum Daily Load (TMDL) approved by the EPA.

Underground Injection Control Authorizations

Congress passed the Safe Drinking Water Act in 1974 and required the Environmental Protection Agency (EPA) to create the Underground Injection Control (UIC) Program as on of the key programs for protecting drinking water sources. The UIC program is administered under 40 CFR Part 144. In 1984, Ecology received the authority from EPA to regulate UIC wells and adopted the UIC rule, Chapter 173-218 WAC. Ecology adopted revisions to Chapter 173-218 WAC rules on January 3, 2006 and the new rule went into affect on February 3, 2006.

The program requires:

- A non-endangerment performance standard be met, prohibiting injection that allows the movement of fluids containing any contaminant into groundwater.
- All well owners must provide inventory information by registering their wells with Ecology.

More information on the UIC program and how to register your well is available at: http://www.ecy.wa.gov/programs/wq/grndwtr/uic/index.html.

It is the responsibility of applicants/owners to contact Ecology and determine if their facilities are regulated under this program. If regulated, the applicant/owner is responsible to fulfill the program requirements properly.

Other City Requirements

The Planning, Building and Community Development Department is responsible for all land use permitting activities, including permits for buildings, grading, paving, shoreline activities, critical areas, short plats, formal subdivisions, etc.

Title 13 of the Auburn City Code (ACC) governs wastewater and surface water and gives the City its authority to regulate water quality control of surface waters, the stormwater system, and the sanitary sewer system. This Title also provides inspection authority, and enforcement authority for illegal discharges to the stormwater system.

New development and redevelopment projects also may be subject to other city code requirements, depending upon the nature and location of the project. These code requirements may include, but are not limited to the subdivision and land use permit procedures in Titles 17 and 14 ACC; excavation and grading in ACC Chapter 15.74; off-site improvements that include storm drainage in ACC 13.48.330; driveway control in Chapter 12.20 ACC; groundwater protection in Chapter 8.08 ACC; shoreline regulation in Chapter 16.08 ACC; and critical areas protection in Chapter 16.10 ACC.

The City of Auburn's Permit Center assists customers through every aspect of the permitting process, from initial questions and pre-application meetings through inspections and final certificate of occupancy. Applicants are encouraged to meet with City staff prior to plan submittal. Contact the City's Permit Counter at 253-591-5030 for more information.

Under the Growth Management Act, Chapter 36.70A RCW, the City has developed utilities and capital facilities plans to help ensure the provision of adequate utilities, including storm drainage. Depending upon the type of projects, new development and redevelopment may be required to contribute to the construction of facilities necessary to accommodate impacts created by that development.

Appendix B Stormwater Site Plan Submittal Requirements Checklist

The Submittal Requirements Checklist is intended to aid the design engineer in preparing a Stormwater Site Plan. All items included in the following checklist must be addressed as part of any stormwater site plan. The City recommends the design engineer follow the order and structure of the checklist to facilitate review, which in turn will expedite permit issuance.

Chapter 1 – Project Overview

The project overview is intended to be a summary of detailed information contained in the body of the Stormwater Site Plan.

- ☐ Identify type of permit requested and permit number
- ☐ Identify other permits required (e.g. hydraulic permits, Army Corps 404 permits, wetlands, etc.).
- ☐ Identify the project location (including address, legal description, and parcel number).
- ☐ Brief description of project to include the following:
  - ☐ Current and proposed condition/land-use
  - ☐ Size of parcel
  - ☐ Acreage developed, redeveloped, replaced or converted by the project
  - ☐ Current assessed value and cost of proposed improvements (for redevelopment projects)
  - ☐ Watershed
  - ☐ Proposed flow control improvements
  - ☐ Proposed runoff treatment improvements
  - ☐ Proposed conveyance improvements
  - ☐ Proposed discharge location and improvements
  - ☐ Downstream condition, impacts and problem
  - ☐ Locations of surface water run-on to the property
  - ☐ Reference appropriate Sections/Chapters/Appendices of the document for detailed descriptions.

Chapter 2 – Existing Condition Summary

The Existing Condition Summary is intended to provide a complete understanding of the project site and must be based on thorough site research and investigation.

- ☐ Describe, discuss and identify the following for the project site:
  - ☐ Topography
  - ☐ Land use and ground cover
  - ☐ Natural and man-made drainage patterns
  - ☐ Points of entry and exit for existing drainage to and from the site
  - ☐ Any known historical drainage problems such as flooding, erosion, etc.
  - ☐ Existing utilities (storm, water, sewer)
  - ☐ Areas with high potential for erosion and sediment deposition
  - ☐ Locations of sensitive and critical areas (i.e. vegetative buffers, wetlands, steep slopes, floodplains, geologic hazard areas, streams, creeks, ponds, ravines, springs, etc).
  - ☐ Existing fuel tanks

  - ☐ Groundwater wells on-site and within 100 feet of site
  - ☐ Septic systems on-site and/or within 100 feet of the site
- ☐ Identify difficult site conditions.
- ☐ State whether the project is located in an aquifer recharge area or wellhead protection area as defined by the Washington State Health Department, the Environmental Protection Agency or by the City.
- ☐ Identify any Superfund areas in the vicinity, and state whether they are tributary to, or receive drainage from, the project site.
- ☐ Identify any specific requirements included in a basin plan for the area.
- ☐ Include references to relevant reports such as basin plans, flood studies, groundwater studies, wetland designations, sensitive area designations, environmental impact statements, environmental checklists, lake restoration plans, water quality reports, etc. Where such reports impose additional conditions on the Proponent, state these conditions, and describe any proposed mitigation measures.
- ☐ Grading Plan per requirements.
- ☐ A soil report to identify the following:
  - ☐ Soil types
  - ☐ Hydrologic soil group classification
  - ☐ Groundwater elevation
  - ☐ Presence of perched aquifers, acquitters and confined aquifers
  - ☐ Location of test pits
  - ☐ Infiltration rates determined per the requirements of Volume III (where applicable)
  - ☐ Discussion of critical areas or geologic hazards where present
- ☐ Soil reports should be contained in an Appendix of the report or as a separate document.
- ☐ Describe the 100-year flood hazard zone.

Chapter 3 – Off-Site Analysis (Minimum Requirement #10)

The City requires a qualitative discussion of the off-site upstream and downstream system for all projects. The City may require a quantitative analysis for any project deemed to need additional downstream information. Detailed calculations shall be contained in an Appendix of the report. Volume I, Chapter 4 describes the Off-site Analysis. In addition, a list of elements to be included is provided as follows.

Qualitative Analysis

- ☐ Review all available plans, studies, maps pertaining to the off-site study area.
- ☐ Investigate the drainage system ¼ mile downstream from the project by site visit, including the following items:
  - ☐ Problems reported or observed during the resource review
  - ☐ Existing/potential constrictions or capacity deficiencies in the drainage system
  - ☐ Existing/potential flooding problems
  - ☐ Existing/potential overtopping, scouring, bank sloughing, or sedimentation
  - ☐ Significant destruction of aquatic habitat (e.g., siltation, stream incision)
  - ☐ Existing public and private easements through the project site and their corresponding widths
  - ☐ Qualitative data on features such as land use, impervious surface, topography, soils, presence of streams, and wetlands

  - ☐ Information on pipe sizes, channel characteristics and drainage structures
  - ☐ Verification of tributary drainage areas
  - ☐ Date and weather at the time of the inspection
- ☐ Describe the drainage system and its existing and predicted problems through observations, reports, and hydraulic modeling (as necessary) of the City-specified design storm event described in Chapter 3 of Volume III. Describe all existing or potential problems as listed above (e.g. pooling water or erosion). The following information shall be provided for each existing or potential problem:
  - ☐ Magnitude of or damage caused by the problem
  - ☐ General frequency and duration
  - ☐ Return frequency of storm or flow when the problem occurs (may require quantitative analysis)
  - ☐ Water elevation when the problem occurs
  - ☐ Names and concerns of the parties involved
  - ☐ Current mitigation of the problem
  - ☐ Possible cause of the problem
  - ☐ Whether the project is likely to aggravate the problem or create a new one
- ☐ Properly include off-site areas in drainage calculations.

Quantitative Analysis (see Volume III, Section 3.1.2)

- ☐ Clearly describe tail water assumptions.
- ☐ Summarize results in text.
- ☐ Include calculations in Appendix B of the report.
- ☐ Discuss potential fixes for capacity problems.
- ☐ Provide profiles where appropriate.

Chapter 4 – Permanent Stormwater Control Plan

Chapter 4 will contain the information used to select, size and locate permanent stormwater control BMPs for the project site.

Pre-Developed Site Hydrology

- ☐ Provide a list of assumptions and site parameters for the pre-developed condition.
- ☐ Identify all sub-basins within, or flowing through, the site. Use consistent labeling for all sub-basins throughout figures, calculations, and text.
- ☐ For each sub-basin, identify current land use, acreage, hydrologic soil group and land use to be modeled under pre-developed conditions. The format used in Example Table I-B-1 show below is recommended.
- ☐ Provide justification for land uses other than forest.
- ☐ The pre-developed soil types shall be assumed as either outwash (Hydrologic Soil Group A/B) or till (Hydrologic Soil Group C/D) soils, depending on supporting geotechnical information. Saturated soil conditions shall only be considered when determining existing wetland hydrology.
- ☐ Summarize output data from the pre-developed condition. Example Tables I-B-2a or I-B-2b are recommended formats.
- ☐ Include completed Hydraulic Analysis worksheet (see Appendix C in this volume) and hydrologic calculations in Appendix D of the report.
- ☐ For WWHM models, provide model files electronically.

Example Table I-B-1

Sub-Basin ID	Land Use and Cover Condition	Acreage	Soil Group	Modeled as: (List CN)	Comments

Example Table I-B-2a

Pre-Developed Condition Event Output: SBUH			
Basin ID:			
	Peak Flow (cfs)	**Volume (ac-ft)**	**Area (ac)**
2-year existing			
10-year existing			
25-year existing			
100-year existing			

Example Table I-B-2b

Pre-Developed Condition Event Output: WWHM		
Basin ID:		
	Peak Flow (cfs)	**Area (ac)**
2-year existing		
10-year existing		
25-year existing		
100-year existing		

Developed Site Hydrology

- ☐ Provide a list of assumptions and site parameters for the developed condition.
- ☐ Identify all sub-basins within, or flowing through, the site. Use consistent labeling for all sub-basins throughout figures, calculations, and text.
- ☐ For each sub-basin, identify current land use, acreage, hydrologic soil group and land use to be modeled under developed conditions. The format used in Example Table I-B-1 is recommended.
- ☐ Summarize output data from the developed condition. The formats used in Example Tables I-B-2a or I-B-2b are recommended.
- ☐ Include completed Hydraulic Analysis worksheet (see Appendix C in this volume) and hydrologic calculations in Appendix D of the report.

Performance Goals and Standards

- ☐ Indicate total acreage of impervious surfaces, pollution-generating impervious surfaces and pollution-generating pervious surfaces for each Threshold Discharge Area (TDA). The format used in Example Table I-B-3 is recommended.
- ☐ Include applicable decision chart (Figure I-3-1, Figure I-3-2, or Figure I-3-3) with treatment requirements clearly marked and supported.
- ☐ Include applicable decision chart (Figure I-3-2) with flow control requirements clearly marked and supported. If flow control facilities are required, indicate that they are required.
- ☐ State conclusions from decision and flow charts.

Example Table I-B-3

Threshold Discharge Area ID:	
Total pollution generating pervious surface (PGPS)	acres
Total pollution generating impervious surface ((PGIS)	acres
Native vegetation converted to lawn/landscape	acres
Total effective impervious surface	acres
Increase in 100-yer storm peak	cfs

Flow Control System (where required)

- ☐ Identify sizing system used.
- ☐ Summarize model results.
- ☐ Describe proposed flow control system and appurtenances, including size, type, and characteristics of storage facility and control structure.
- ☐ Provide a drawing of the flow control facility and its appurtenances, including:
- ☐ Include Hydraulic Analysis Worksheet, calculations, and computer printouts (including stage storage tables) for the flow control system to be included in Appendix D of the report.

Water Quality System (where required)

- ☐ Identify the sizing method used.
- ☐ Summarize model results.
- ☐ Identify treatment methods used, including size, type, and characteristics of treatment facility and appurtenances.
- ☐ Provide a drawing of the treatment facility and its appurtenances, including:
  - ☐ Dimensions
  - ☐ Inlet/outlet sizes and elevations
  - ☐ Location of the facility on the project site
  - ☐ Appurtenances/fittings
- ☐ Calculations for the water quality design storm and facility sizing calculations must be included in an Appendix of the report.
- ☐ Where appropriate, include manufacturer's specifications in an Appendix of the report.

Conveyance System Analysis and Design

- ☐ Illustrate the proposed conveyance system on a project site plan.
- ☐ Identify pipe sizes, types, and slopes.
- ☐ Describe capacities, design flows, and velocities for each reach.
- ☐ Include conveyance calculations in an Appendix of the report.

Chapter 5 – Discussion of Minimum Requirements

Chapter 5 is intended as a checklist for the applicant and reviewer to verify that the applicable Minimum Requirements have been met within the project submittal.

- ☐ Include applicable flowcharts for determining minimum requirements (Figure I-3-1, Figure I-3-2, or Figure I-3-3) with decision path clearly marked.
- ☐ List the minimum requirements that apply to the project.
- ☐ Discuss how the project satisfies each minimum requirement.
- ☐ Indicate where in the project documentation each minimum requirement is satisfied.

Chapter 6 – Operation and Maintenance Manual

The Operation and Maintenance Manual may be included in the Stormwater Site Plan, however it shall be written with the intention of becoming a stand-alone document for the project owner once the project is complete. The Operation and Maintenance Manual must include:

- ☐ A narrative description of the on-site storm system.
- ☐ An 11 x 17 inch map of the site, with the locations of the **treatment/detention/infiltration/etc**. facilities prominently noted. This is needed to enable the Operation and Maintenance manual to be a stand-alone document.
- ☐ The person or organization responsible for maintenance of the on-site storm system, including the phone number and current responsible party.
- ☐ Where the Operation and Maintenance manual is to be kept. Note that it must be made available to the City for inspection.
- ☐ A description of each flow control and treatment facility, including what it does and how it works. Include any manufacturer's documentation.
- ☐ A description of all maintenance tasks and the frequency of each task for each flow control and treatment facility. Include any manufacturer's recommendations.
- ☐ A sample maintenance activity log indicating emergency and routine actions to be taken.

Chapter 7 – Construction Stormwater Pollution Prevention Plan

- ☐ Short-Form – Please refer to Volume II, Appendix C for a complete checklist, or
- ☐ Formal/Long-Form – Please refer to Volume II, Chapter 2 for a complete checklist.

Appendices

- ☐ Appendix A – Operations and Maintenance Manual
- ☐ Appendix B – Construction Stormwater Pollution Prevention Plan
- ☐ Appendix C – Submittal Requirements Checklist
- ☐ Appendix D – Hydraulic Analysis Worksheet
- ☐ Appendix E – Other reports, as required

Required Drawings

Project drawings shall be provided as required in Chapter 4, and shall include the following:

- ☐ Vicinity Map
- ☐ Site Map and Grading Plan
- ☐ Basin Map
- ☐ Storm Plan and Profile
- ☐ Erosion Control Plan
- ☐ Detail Sheets

Appendix C Hydraulic Analysis Worksheet

Provide the following information for all projects, as applicable.

Name/Project: _____

Address _____

Parcel Number _____ Permit Number: _____

Watershed: _____

WWHM or Continuous Models Input

Model files must be provided electronically. Include both on-site and off-site quantities.

Amount of new impervious (square feet): _____

Amount of replaced impervious (square feet): _____

Amount of new plus replaced (square feet): _____

Amount of land disturbed (square feet): _____

Native vegetation to lawn/landscaped (acres): _____

Native vegetation to pasture (acres): _____

Value of proposed improvements ($): _____

Assessed value of existing site improvements ($): _____

Amount to be graded/filled (cubic feet): _____

Existing impervious: _____

Amount of new pgis (square feet): _____

Amount of existing pgis (square feet): _____

Amount of new pgs (square feet): _____

Amount of existing pgs (square feet): _____

SBUH Input

Rainfall Type: _____

Hydraulic Method: _____

Hydraulic Interval: _____

Peak Factor: _____

Tp Factor: _____

Complete the following tables for sub-basins tributary to the project site (on-site and off-site).

Pre-Developed Conditions

Sub-basin Name	Acreage	Land Use/ Ground Cover*	Hydrologic Soil Group*	Curve Number

* Where more than one land use or soil group are present within a sub-basin, a line item must be shown for each to support calculation of the composite pervious and impervious Curve Numbers.

Developed Conditions

Sub-basin Name	Acreage	Land Use/ Ground Cover*	Hydrologic Soil Group*	Curve Number

* Where more than one land use or soil group are present within a sub-basin, a line item must be shown for each to support calculation of the composite pervious and impervious Curve Numbers.

Provide pervious and impervious Tc data for each sub-basin including the flow path shown on an attached figure.

Flow Control Facilities

For the flow control facility, provide the following:

- Bottom length: _____
- Bottom width: _____
- Side slopes: _____
- Stage/ Storage Table with units: _____

For the control structure, provide the following:

- Outlet pipe size: _____
- Orifice elevation: _____ Diameter: _____
- Orifice elevation: _____ Diameter: _____
- Orifice elevation: _____ Diameter: _____
- Riser elevation: _____ Diameter: _____
- V-notch weir data (alternate): _____

Appendix D Maintenance Standards for Drainage Facilities

The facility-specific maintenance standards contained in this section are intended to be conditions for determining if maintenance actions are required as identified through inspection. They are not intended to be measures of the facility's required condition at all times between inspections. In other words, exceeding these conditions at any time between inspections and/or maintenance does not automatically constitute a violation of these standards. However, based upon inspection observations, the inspection and maintenance schedules shall be adjusted to minimize the length of time that a facility is in a condition that requires a maintenance action.

Table I-D-1. Maintenance Standards

No. 1 – Detention Ponds

Maintenance Component	Defect	Conditions When Maintenance Is Needed	Results Expected When Maintenance Is Performed
General	Trash & Debris	Any trash and debris which exceed 5 cubic feet per 1,000 square feet (this is about equal to the amount of trash it would take to fill up one standard size garbage can). In general, there should be no visual evidence of dumping. If less than threshold all trash and debris will be removed as part of next scheduled maintenance.	Trash and debris cleared from site.
	Poisonous Vegetation and noxious weeds	Any poisonous or nuisance vegetation which may constitute a hazard to maintenance personnel or the public. Any evidence of noxious weeds as defined by State or local regulations. (Apply requirements of adopted IPM policies for the use of herbicides).	No danger of poisonous vegetation where maintenance personnel or the public might normally be. (Coordinate with local health department) Complete eradication of noxious weeds may not be possible. Compliance with State or local eradication policies required
	Contaminants and Pollution	Any evidence of oil, gasoline, contaminants or other pollutants (Coordinate removal/cleanup with local water quality response agency).	No contaminants or pollutants present
	Rodent Holes	Any evidence of rodent holes if facility is acting as a dam or berm, or any evidence of water piping through dam or berm via rodent holes.	Rodents destroyed and dam or berm repaired. (Coordinate with local health department; coordinate with Ecology Dam Safety Office if pond exceeds 10 acre-feet.)

No. 1 – Detention Ponds

Maintenance Component	Defect	Conditions When Maintenance Is Needed	Results Expected When Maintenance Is Performed
General	Beaver Dams	Dam results in change or function of the facility.	Facility is returned to design function. (Coordinate trapping of beavers and removal of dams with appropriate permitting agencies)
	Insects	When insects such as wasps and hornets interfere with maintenance activities.	Insects destroyed or removed from site. Apply insecticides in compliance with adopted IPM policies
	Tree Growth and Hazard Trees	Tree growth does not allow maintenance access or interferes with maintenance activity (i.e., slope mowing, silt removal, vactoring, or equipment movements). If trees are not interfering with access or maintenance, do not remove If trees are dead, diseased, or dying. (Use a certified Arborist to determine health of tree or removal requirements)	Trees do not hinder maintenance activities. Harvested trees should be recycled into mulch or other beneficial uses (e.g., alders for firewood). Remove hazard trees
Side Slopes of Pond	Erosion	Eroded damage over 2 inches deep where cause of damage is still present or where there is potential for continued erosion. Any erosion observed on a compacted berm embankment.	Slopes should be stabilized using appropriate erosion control measure(s); e.g., rock reinforcement, planting of grass, compaction. If erosion is occurring on compacted berms a licensed civil engineer should be consulted to resolve source of erosion.
Storage Area	Sediment	Accumulated sediment that exceeds 10% of the designed pond depth unless otherwise specified or affects inletting or outletting condition of the facility.	Sediment cleaned out to designed pond shape and depth; pond reseeded if necessary to control erosion.
	Liner (If Applicable)	Liner is visible and has more than three 1/4-inch holes in it.	Liner repaired or replaced. Liner is fully covered.

No. 1 – Detention Ponds

Maintenance Component	Defect	Conditions When Maintenance Is Needed	Results Expected When Maintenance Is Performed
Pond Berms (Dikes)	Settlements	Any part of berm which has settled 4 inches lower than the design elevation. If settlement is apparent, measure berm to determine amount of settlement. Settling can be an indication of more severe problems with the berm or outlet works. A licensed civil engineer should be consulted to determine the source of the settlement.	Dike is built back to the design elevation.
	Piping	Discernable water flow through pond berm. Ongoing erosion with potential for erosion to continue. (Recommend a Geotechnical engineer be called in to inspect and evaluate condition and recommend repair of condition.	Piping eliminated. Erosion potential resolved.
Emergency Overflow/ Spillway and Berms over 4 feet in height.	Tree Growth	Tree growth on emergency spillways creates blockage problems and may cause failure of the berm due to uncontrolled overtopping. Tree growth on berms over 4 feet in height may lead to piping through the berm which could lead to failure of the berm.	Trees should be removed. If root system is small (base less than 4 inches) the root system may be left in place. Otherwise the roots should be removed and the berm restored. A licensed civil engineer should be consulted for proper berm/spillway restoration.
	Piping	Discernable water flow through pond berm. Ongoing erosion with potential for erosion to continue. (Recommend a Geotechnical engineer be called in to inspect and evaluate condition and recommend repair of condition.	Piping eliminated. Erosion potential resolved.
Emergency Overflow/ Spillway	Emergency Overflow/ Spillway	Only one layer of rock exists above native soil in area five square feet or larger, or any exposure of native soil at the top of out flow path of spillway. (Rip-rap on inside slopes need not be replaced.)	Rocks and pad depth are restored to design standards.
	Erosion	See “Side Slopes of Pond”	

No. 2 – Infiltration

Maintenance Component	Defect	Conditions When Maintenance Is Needed	Results Expected When Maintenance Is Performed
General	Trash & Debris	See "Detention Ponds" (No. 1).	See "Detention Ponds" (No. 1).
	Poisonous/Noxious Vegetation	See "Detention Ponds" (No. 1).	See "Detention Ponds" (No. 1).
	Contaminants and Pollution	See "Detention Ponds" (No. 1).	See "Detention Ponds" (No. 1).
	Rodent Holes	See "Detention Ponds" (No. 1).	See "Detention Ponds" (No. 1)
Storage Area	Sediment	Water ponding in infiltration pond after rainfall ceases and appropriate time allowed for infiltration. (A percolation test pit or test of facility indicates facility is only working at 90% of its designed capabilities. If two inches or more sediment is present, remove).	Sediment is removed and/or facility is cleaned so that infiltration system works according to design.
Filter Bags (if applicable)	Filled with Sediment and Debris	Sediment and debris fill bag more than 1/2 full.	Filter bag is replaced or system is redesigned.
Rock Filters	Sediment and Debris	By visual inspection, little or no water flows through filter during heavy rain storms.	Gravel in rock filter is replaced.
Side Slopes of Pond	Erosion	See "Detention Ponds" (No. 1).	See "Detention Ponds" (No. 1).
Emergency Overflow Spillway and Berms over 4 feet in height.	Tree Growth	See "Detention Ponds" (No. 1).	See "Detention Ponds" (No. 1).
	Piping	See "Detention Ponds" (No. 1).	See "Detention Ponds" (No. 1).
Emergency Overflow Spillway	Rock Missing	See "Detention Ponds" (No. 1).	See "Detention Ponds" (No. 1).
	Erosion	See "Detention Ponds" (No. 1).	See "Detention Ponds" (No. 1).
Pre-settling Ponds and Vaults	Facility or sump filled with sediment and/or debris	6" or designed sediment trap depth of sediment.	Sediment is removed.

No. 3 – Closed Detention Systems (Tanks/Vaults)

Maintenance Component	Defect	Conditions When Maintenance is Needed	Results Expected When Maintenance is Performed
Storage Area	Plugged Air Vents	One-half of the cross section of a vent is blocked at any point or the vent is damaged.	Vents open and functioning.
	Debris and Sediment	Accumulated sediment depth exceeds 10% of the diameter of the storage area for 1/2 length of storage vault or any point depth exceeds 15% of diameter. (Example: 72-inch storage tank would require cleaning when sediment reaches depth of 7 inches for more than 1/2 length of tank.)	All sediment and debris removed from storage area.
	Joints Between Tank/Pipe Section	Any openings or voids allowing material to be transported into facility. (Will require engineering analysis to determine structural stability).	All joint between tank/pipe sections are sealed.
	Tank Pipe Bent Out of Shape	Any part of tank/pipe is bent out of shape more than 10% of its design shape. (Review required by engineer to determine structural stability).	Tank/pipe repaired or replaced to design.
	Vault Structure Includes Cracks in Wall, Bottom, Damage to Frame and/or Top Slab	Cracks wider than 1/2-inch and any evidence of soil particles entering the structure through the cracks, or maintenance/inspection personnel determines that the vault is not structurally sound.	Vault replaced or repaired to design specifications and is structurally sound.
		Cracks wider than 1/2-inch at the joint of any inlet/outlet pipe or any evidence of soil particles entering the vault through the walls.	No cracks more than 1/4-inch wide at the joint of the inlet/outlet pipe.
Manhole	Cover Not in Place	Cover is missing or only partially in place. Any open manhole requires maintenance.	Manhole is closed.
	Locking Mechanism Not Working	Mechanism cannot be opened by one maintenance person with proper tools. Bolts into frame have less than 1/2 inch of thread (may not apply to self-locking lids).	Mechanism opens with proper tools.
	Cover Difficult to Remove	One maintenance person cannot remove lid after applying normal lifting pressure. Intent is to keep cover from sealing off access to maintenance.	Cover can be removed and reinstalled by one maintenance person.
	Ladder Rungs Unsafe	Ladder is unsafe due to missing rungs, misalignment, not securely attached to structure wall, rust, or cracks.	Ladder meets design standards. Allows maintenance person safe access.
Catch Basins	See “Catch Basins” (No. 5)	See “Catch Basins” (No. 5).	See “Catch Basins” (No. 5).

No. 4 – Control Structure/Flow Restrictor

Maintenance Component	Defect	Condition When Maintenance is Needed	Results Expected When Maintenance is Performed
General	Trash and Debris (Includes Sediment)	Material exceeds 25% of sump depth or 1 foot below orifice plate.	Control structure orifice is not blocked. All trash and debris removed.
	Structural Damage	Structure is not securely attached to manhole wall.	Structure securely attached to wall and outlet pipe.
		Structure is not in upright position (allow up to 10% from plumb).	Structure in correct position.
		Connections to outlet pipe are not watertight and show signs of rust.	Connections to outlet pipe are water tight; structure repaired or replaced and works as designed.
		Any holes--other than designed holes--in the structure.	Structure has no holes other than designed holes.
Cleanout Gate	Damaged or Missing	Cleanout gate is not watertight, is missing, or is left open.	Gate is watertight, works as designed, and is left closed.
		Gate cannot be moved up and down by one maintenance person.	Gate moves up and down easily and is watertight.
		Chain/rod leading to gate is missing or damaged.	Chain is in place and works as designed.
		Gate is rusted over 50% of its surface area.	Gate is repaired or replaced to meet design standards.
Orifice Plate	Damaged or Missing	Control device is not working properly due to missing, out of place, or bent orifice plate.	Plate is in place and works as designed.
	Obstructions	Any trash, debris, sediment, or vegetation blocking the plate.	Plate is free of all obstructions and works as designed.
Overflow Pipe	Obstructions	Any trash or debris blocking (or having the potential of blocking) the overflow pipe.	Pipe is free of all obstructions and works as designed.
Manhole	See “Closed Detention Systems” (No. 3).	See “Closed Detention Systems” (No. 3).	See “Closed Detention Systems” (No. 3).
Catch Basin	See “Catch Basins” (No. 5).	See “Catch Basins” (No. 5).	See “Catch Basins” (No. 5).

No. 5 – Catch Basins

Maintenance Component	Defect	Conditions When Maintenance is Needed	Results Expected When Maintenance is performed
General	Trash & Debris	Trash or debris which is located immediately in front of the catch basin opening or is blocking inletting capacity of the basin by more than 10%.	No Trash or debris located immediately in front of catch basin or on grate opening.
		Trash or debris (in the basin) that exceeds 60 percent of the sump depth as measured from the bottom of basin to invert of the lowest pipe into or out of the basin, but in no case less than a minimum of six inches clearance from the debris surface to the invert of the lowest pipe.	No trash or debris in the catch basin.
		Trash or debris in any inlet or outlet pipe blocking more than 1/3 of its height.	Inlet and outlet pipes free of trash or debris.
		Dead animals or vegetation that could generate odors that could cause complaints or dangerous gases (e.g., methane).	No dead animals or vegetation present within the catch basin.
	Sediment	Sediment (in the basin) that exceeds 60 percent of the sump depth as measured from the bottom of basin to invert of the lowest pipe into or out of the basin, but in no case less than a minimum of 6 inches clearance from the sediment surface to the invert of the lowest pipe.	No sediment in the catch basin
	Structure Damage to Frame and/or Top Slab	Top slab has holes larger than 2 square inches or cracks wider than 1/4 inch (Intent is to make sure no material is running into basin).	Top slab is free of holes and cracks.
		Frame not sitting flush on top slab, i.e., separation of more than 3/4 inch of the frame from the top slab. Frame not securely attached	Frame is sitting flush on the riser rings or top slab and firmly attached.
	Fractures or Cracks in Basin Walls/ Bottom	Maintenance person judges that structure is unsound.	Basin replaced or repaired to design standards.
		Grout fillet has separated or cracked wider than 1/2 inch and longer than 1 foot at the joint of any inlet/outlet pipe or any evidence of soil particles entering catch basin through cracks.	Pipe is regrouted and secure at basin wall.
	Settlement/ Misalignment	If failure of basin has created a safety, function, or design problem.	Basin replaced or repaired to design standards.
	Vegetation	Vegetation growing across and blocking more than 10% of the basin opening.	No vegetation blocking opening to basin.
		Vegetation growing in inlet/outlet pipe joints that is more than six inches tall and less than six inches apart.	No vegetation or root growth present.

No. 5 – Catch Basins (continued)

Maintenance Component	Defect	Conditions When Maintenance is Needed	Results Expected When Maintenance is performed
General	Contamination and Pollution	See "Detention Ponds" (No. 1).	No pollution present.
Catch Basin Cover	Cover Not in Place	Cover is missing or only partially in place. Any open catch basin requires maintenance.	Catch basin cover is closed
	Locking Mechanism Not Working	Mechanism cannot be opened by one maintenance person with proper tools. Bolts into frame have less than 1/2 inch of thread.	Mechanism opens with proper tools.
	Cover Difficult to Remove	One maintenance person cannot remove lid after applying normal lifting pressure. (Intent is keep cover from sealing off access to maintenance.)	Cover can be removed by one maintenance person.
Ladder	Ladder Rungs Unsafe	Ladder is unsafe due to missing rungs, not securely attached to basin wall, misalignment, rust, cracks, or sharp edges.	Ladder meets design standards and allows maintenance person safe access.
Metal Grates (If Applicable)	Grate opening Unsafe	Grate with opening wider than 7/8 inch.	Grate opening meets design standards.
	Trash and Debris	Trash and debris that is blocking more than 20% of grate surface inletting capacity.	Grate free of trash and debris.
	Damaged or Missing.	Grate missing or broken member(s) of the grate.	Grate is in place and meets design standards.

No. 6 – Debris Barriers (e.g., Trash Racks)

Maintenance Components	Defect	Condition When Maintenance is Needed	Results Expected When Maintenance is Performed
General	Trash and Debris	Trash or debris that is plugging more than 20% of the openings in the barrier.	Barrier cleared to design flow capacity.
Metal	Damaged/ Missing Bars.	Bars are bent out of shape more than 3 inches.	Bars in place with no bends more than 3/4 inch.
		Bars are missing or entire barrier missing.	Bars in place according to design.
		Bars are loose and rust is causing 50% deterioration to any part of barrier.	Barrier replaced or repaired to design standards.
	Inlet/Outlet Pipe	Debris barrier missing or not attached to pipe	Barrier firmly attached to pipe

No. 7 – Energy Dissipaters

Maintenance Components	Defect	Conditions When Maintenance is Needed	Results Expected When Maintenance is Performed
External:			
Rock Pad	Missing or Moved Rock	Only one layer of rock exists above native soil in area five square feet or larger, or any exposure of native soil.	Rock pad replaced to design standards.
	Erosion	Soil erosion in or adjacent to rock pad.	Rock pad replaced to design standards.
Dispersion Trench	Pipe Plugged with Sediment	Accumulated sediment that exceeds 20% of the design depth.	Pipe cleaned/flushed so that it matches design.
	Not Discharging Water Properly	Visual evidence of water discharging at concentrated points along trench (normal condition is a “sheet flow” of water along trench). Intent is to prevent erosion damage.	Trench redesigned or rebuilt to standards.
	Perforations Plugged.	Over 1/2 of perforations in pipe are plugged with debris and sediment.	Perforated pipe cleaned or replaced.
	Water Flows Out Top of “Distributor” Catch Basin.	Maintenance person observes or receives credible report of water flowing out during any storm less than the design storm or its causing or appears likely to cause damage.	Facility rebuilt or redesigned to standards.
	Receiving Area Over-Saturated	Water in receiving area is causing or has potential of causing landslide problems.	No danger of landslides.
Internal:			
Manhole/Chamber	Worn or Damaged Post, Baffles, Side of Chamber	Structure dissipating flow deteriorates to 1/2 of original size or any concentrated worn spot exceeding one square foot which would make structure unsound.	Structure replaced to design standards.
	Other Defects	See “Catch Basins” (No. 5).	See “Catch Basins” (No. 5).

No. 8 – Typical Biofiltration Swale

Maintenance Component	Defect or Problem	Condition When Maintenance is Needed	Recommended Maintenance to Correct Problem
General	Sediment Accumulation on Grass	Sediment depth exceeds 2 inches.	Remove sediment deposits on grass treatment area of the bio-swale. When finished, swale should be level from side to side and drain freely toward outlet. There should be no areas of standing water once inflow has ceased.
	Standing Water	When water stands in the swale between storms and does not drain freely.	Any of the following may apply: remove sediment or trash blockages, improve grade from head to foot of swale, remove clogged check dams, add underdrains or convert to a wet biofiltration swale.
	Flow spreader	Flow spreader uneven or clogged so that flows are not uniformly distributed through entire swale width.	Level the spreader and clean so that flows are spread evenly over entire swale width.
	Constant Baseflow	When small quantities of water continually flow through the swale, even when it has been dry for weeks, and an eroded, muddy channel has formed in the swale bottom.	Add a low-flow pea-gravel drain the length of the swale or by-pass the baseflow around the swale.
	Poor Vegetation Coverage	When grass is sparse or bare or eroded patches occur in more than 10% of the swale bottom.	Determine why grass growth is poor and correct that condition. Re-plant with plugs of grass from the upper slope: plant in the swale bottom at 8-inch intervals. Or re-seed into loosened, fertile soil.
	Vegetation	When the grass becomes excessively tall (greater than 10-inches); when nuisance weeds and other vegetation starts to take over.	Mow vegetation or remove nuisance vegetation so that flow not impeded. Grass should be mowed to a height of 3 to 4 inches. Remove grass clippings.
	Excessive Shading	Grass growth is poor because sunlight does not reach swale.	If possible, trim back over-hanging limbs and remove brushy vegetation on adjacent slopes.
	Inlet/Outlet	Inlet/outlet areas clogged with sediment and/or debris.	Remove material so that there is no clogging or blockage in the inlet and outlet area.
	Trash and Debris Accumulation	Trash and debris accumulated in the bio-swale.	Remove trash and debris from bioswale.
	Erosion/Scouring	Eroded or scoured swale bottom due to flow channelization, or higher flows.	For ruts or bare areas less than 12 inches wide, repair the damaged area by filling with crushed gravel. If bare areas are large, generally greater than 12 inches wide, the swale should be re-graded and re-seeded. For smaller bare areas, overseed when bare spots are evident, or take plugs of grass from the upper slope and plant in the swale bottom at 8-inch intervals.

No. 9 – Wet Biofiltration Swale

Maintenance Component	Defect or Problem	Condition When Maintenance is Needed	Recommended Maintenance to Correct Problem
General	Sediment Accumulation	Sediment depth exceeds 2-inches in 10% of the swale treatment area.	Remove sediment deposits in treatment area.
	Water Depth	Water not retained to a depth of about 4 inches during the wet season.	Build up or repair outlet berm so that water is retained in the wet swale.
	Wetland Vegetation	Vegetation becomes sparse and does not provide adequate filtration, OR vegetation is crowded out by very dense clumps of cattail, which do not allow water to flow through the clumps.	Determine cause of lack of vigor of vegetation and correct. Replant as needed. For excessive cattail growth, cut cattail shoots back and compost off-site. Note: normally wetland vegetation does not need to be harvested unless die-back is causing oxygen depletion in downstream waters.
	Inlet/Outlet	Inlet/outlet area clogged with sediment and/or debris.	Remove clogging or blockage in the inlet and outlet areas.
	Trash and Debris Accumulation	See "Detention Ponds" (No. 1).	Remove trash and debris from wet swale.
	Erosion/Scouring	Swale has eroded or scoured due to flow channelization, or higher flows.	Check design flows to assure swale is large enough to handle flows. By-pass excess flows or enlarge swale. Replant eroded areas with fibrous-rooted plants such as Juncus effusus (soft rush) in wet areas or snowberry (Symphoricarpos albus) in dryer areas.

No. 10 – Filter Strips

Maintenance Component	Defect or Problem	Condition When Maintenance is Needed	Recommended Maintenance to Correct Problem
General	Sediment Accumulation on Grass	Sediment depth exceeds 2 inches.	Remove sediment deposits, re-level so slope is even and flows pass evenly through strip.
	Vegetation	When the grass becomes excessively tall (greater than 10-inches); when nuisance weeds and other vegetation starts to take over.	Mow grass, control nuisance vegetation, such that flow not impeded. Grass should be mowed to a height between 3-4 inches.
	Trash and Debris Accumulation	Trash and debris accumulated on the filter strip.	Remove trash and Debris from filter.
	Erosion/Scouring	Eroded or scoured areas due to flow channelization, or higher flows.	For ruts or bare areas less than 12 inches wide, repair the damaged area by filling with crushed gravel. The grass will creep in over the rock in time. If bare areas are large, generally greater than 12 inches wide, the filter strip should be re-graded and re-seeded. For smaller bare areas, overseed when bare spots are evident.
	Flow spreader	Flow spreader uneven or clogged so that flows are not uniformly distributed through entire filter width.	Level the spreader and clean so that flows are spread evenly over entire filter width.

No. 11 – Wetponds

Maintenance Component	Defect	Condition When Maintenance is Needed	Results Expected When Maintenance is Performed
General	Water level	First cell is empty, does not hold water.	Line the first cell to maintain at least 4 feet of water. Although the second cell may drain, the first cell must remain full to control turbulence of the incoming flow and reduce sediment resuspension.
	Trash and Debris	Accumulation that exceeds 1 CF per 1000-SF of pond area.	Trash and debris removed from pond.
	Inlet/Outlet Pipe	Inlet/Outlet pipe clogged with sediment and/or debris material.	No clogging or blockage in the inlet and outlet piping.
	Sediment Accumulati on in Pond Bottom	Sediment accumulations in pond bottom that exceeds the depth of sediment zone plus 6-inches, usually in the first cell.	Sediment removed from pond bottom.
	Oil Sheen on Water	Prevalent and visible oil sheen.	Oil removed from water using oil-absorbent pads or vactor truck. Source of oil located and corrected. If chronic low levels of oil persist, plant wetland plants such as Juncus effusus (soft rush) which can uptake small concentrations of oil.
	Erosion	Erosion of the pond's side slopes and/or scouring of the pond bottom, that exceeds 6-inches, or where continued erosion is prevalent.	Slopes stabilized using proper erosion control measures and repair methods.
	Settlement of Pond Dike/Berm	Any part of these components that has settled 4-inches or lower than the design elevation, or inspector determines dike/berm is unsound.	Dike/berm is repaired to specifications.
	Internal Berm	Berm dividing cells should be level.	Berm surface is leveled so that water flows evenly over entire length of berm.
	Overflow Spillway	Rock is missing and soil is exposed at top of spillway or outside slope.	Rocks replaced to specifications.

No. 12 – Wetvaults

Maintenance Component	Defect	Condition When Maintenance is Needed	Results Expected When Maintenance is Performed
General	Trash/Debris Accumulation	Trash and debris accumulated in vault, pipe or inlet/outlet (includes floatables and non-floatables).	Remove trash and debris from vault.
	Sediment Accumulation in Vault	Sediment accumulation in vault bottom exceeds the depth of the sediment zone plus 6-inches.	Remove sediment from vault.
	Damaged Pipes	Inlet/outlet piping damaged or broken and in need of repair.	Pipe repaired and/or replaced.
	Access Cover Damaged/Not Working	Cover cannot be opened or removed, especially by one person.	Pipe repaired or replaced to proper working specifications.
	Ventilation	Ventilation area blocked or plugged.	Blocking material removed or cleared from ventilation area. A specified % of the vault surface area must provide ventilation to the vault interior (see design specifications).
	Vault Structure Damage - Includes Cracks in Walls Bottom, Damage to Frame and/or Top Slab	Maintenance/inspection personnel determine that the vault is not structurally sound.	Vault replaced or repairs made so that vault meets design specifications and is structurally sound.
		Cracks wider than 1/2-inch at the joint of any inlet/outlet pipe or evidence of soil particles entering through the cracks.	Vault repaired so that no cracks exist wider than 1/4-inch at the joint of the inlet/outlet pipe.
	Baffles	Baffles corroding, cracking, warping and/or showing signs of failure as determined by maintenance/inspection staff.	Baffles repaired or replaced to specifications.
	Access Ladder Damage	Ladder is corroded or deteriorated, not functioning properly, not attached to structure wall, missing rungs, has cracks and/or misaligned. Confined space warning sign missing.	Ladder replaced or repaired to specifications, and is safe to use as determined by inspection personnel. Replace sign warning of confined space entry requirements. Ladder and entry notification complies with OSHA standards.

No. 13 – Sand Filters (above ground/open)

Maintenance Component	Defect	Condition When Maintenance is Needed	Results Expected When Maintenance is Performed
Above Ground (open sand filter)	Sediment Accumulation on top layer	Sediment depth exceeds 1/2-inch.	No sediment deposit on grass layer of sand filter that would impede permeability of the filter section.
	Trash and Debris Accumulations	Trash and debris accumulated on sand filter bed.	Trash and debris removed from sand filter bed.
	Sediment/ Debris in Clean-Outs	When the clean-outs become full or partially plugged with sediment and/or debris.	Sediment removed from clean-outs.
	Sand Filter Media	Drawdown of water through the sand filter media takes longer than 24-hours, and/or flow through the overflow pipes occurs frequently.	Top several inches of sand are scraped. May require replacement of entire sand filter depth depending on extent of plugging (a sieve analysis is helpful to determine if the lower sand has too high a proportion of fine material).
	Prolonged Flows	Sand is saturated for prolonged periods of time (several weeks) and does not dry out between storms due to continuous base flow or prolonged flows from detention facilities.	Low, continuous flows are limited to a small portion of the facility by using a low wooden divider or slightly depressed sand surface.
	Short Circuiting	When flows become concentrated over one section of the sand filter rather than dispersed.	Flow and percolation of water through sand filter is uniform and dispersed across the entire filter area.
	Erosion Damage to Slopes	Erosion over 2-inches deep where cause of damage is prevalent or potential for continued erosion is evident.	Slopes stabilized using proper erosion control measures.
	Rock Pad Missing or Out of Place	Soil beneath the rock is visible.	Rock pad replaced or rebuilt to design specifications.
	Flow Spreader	Flow spreader uneven or clogged so that flows are not uniformly distributed across sand filter.	Spreader leveled and cleaned so that flows are spread evenly over sand filter.
	Damaged Pipes	Any part of the piping that is crushed or deformed more than 20% or any other failure to the piping.	Pipe repaired or replaced.

No. 14 –Sand Filters (below ground/enclosed)

Maintenance Component	Defect	Condition When Maintenance is Needed	Results Expected When Maintenance is Performed
Below Ground Vault.	Sediment Accumulation on Sand Media Section	Sediment depth exceeds 1/2-inch.	No sediment deposits on sand filter section that which would impede permeability of the filter section.
	Sediment Accumulation in Pre-Settling Portion of Vault	Sediment accumulation in vault bottom exceeds the depth of the sediment zone plus 6-inches.	No sediment deposits in first chamber of vault.
	Trash/Debris Accumulation	Trash and debris accumulated in vault, or pipe inlet/outlet, floatables and non-floatables.	Trash and debris removed from vault and inlet/outlet piping.
	Sediment in Drain Pipes/Cleanouts	When drain pipes, cleanouts become full with sediment and/or debris.	Sediment and debris removed.
	Short Circuiting	When seepage/flow occurs along the vault walls and corners. Sand eroding near inflow area.	Sand filter media section re-laid and compacted along perimeter of vault to form a semi-seal. Erosion protection added to dissipate force of incoming flow and curtail erosion.
	Damaged Pipes	Inlet or outlet piping damaged or broken and in need of repair.	Pipe repaired and/or replaced.
	Access Cover Damaged/Not Working	Cover cannot be opened, corrosion/deformation of cover. Maintenance person cannot remove cover using normal lifting pressure.	Cover repaired to proper working specifications or replaced.
	Ventilation	Ventilation area blocked or plugged	Blocking material removed or cleared from ventilation area. A specified % of the vault surface area must provide ventilation to the vault interior (see design specifications).
	Vault Structure Damaged; Includes Cracks in Walls, Bottom, Damage to Frame and/or Top Slab.	Cracks wider than 1/2-inch or evidence of soil particles entering the structure through the cracks, or maintenance/inspection personnel determine that the vault is not structurally sound.	Vault replaced or repairs made so that vault meets design specifications and is structurally sound.
		Cracks wider than 1/2-inch at the joint of any inlet/outlet pipe or evidence of soil particles entering through the cracks.	Vault repaired so that no cracks exist wider than 1/4-inch at the joint of the inlet/outlet pipe.
	Baffles/Internal walls	Baffles or walls corroding, cracking, warping and/or showing signs of failure as determined by maintenance/inspection person.	Baffles repaired or replaced to specifications.
	Access Ladder Damaged	Ladder is corroded or deteriorated, not functioning properly, not securely attached to structure wall, missing rungs, cracks, and misaligned	Ladder replaced or repaired to specifications, and is safe to use as determined by inspection personnel.

No. 15 – STORMFILTER™

Maintenance Component	Defect	Condition When Maintenance is Needed	Results Expected When Maintenance is Performed
Below Ground Vault	Sediment Accumulation on Media.	Sediment depth exceeds 0.25-inches.	No sediment deposits which would impede permeability of the compost media.
	Sediment Accumulation in Vault	Sediment depth exceeds 6-inches in first chamber.	No sediment deposits in vault bottom of first chamber.
	Trash/Debris Accumulation	Trash and debris accumulated on compost filter bed.	Trash and debris removed from the compost filter bed.
	Sediment in Drain Pipes/Clean-Outs	When drain pipes, clean-outs, become full with sediment and/or debris.	Sediment and debris removed.
	Damaged Pipes	Any part of the pipes that are crushed or damaged due to corrosion and/or settlement.	Pipe repaired and/or replaced.
	Access Cover Damaged/Not Working	Cover cannot be opened; one person cannot open the cover using normal lifting pressure, corrosion/deformation of cover.	Cover repaired to proper working specifications or replaced.
	Vault Structure Includes Cracks in Wall, Bottom, Damage to Frame and/or Top Slab	Cracks wider than 1/2-inch or evidence of soil particles entering the structure through the cracks, or maintenance/inspection personnel determine that the vault is not structurally sound.	Vault replaced or repairs made so that vault meets design specifications and is structurally sound.
		Cracks wider than 1/2-inch at the joint of any inlet/outlet pipe or evidence of soil particles entering through the cracks.	Vault repaired so that no cracks exist wider than 1/4-inch at the joint of the inlet/outlet pipe.
	Baffles	Baffles corroding, cracking warping, and/or showing signs of failure as determined by maintenance/inspection person.	Baffles repaired or replaced to specifications.
	Access Ladder Damaged	Ladder is corroded or deteriorated, not functioning properly, not securely attached to structure wall, missing rungs, cracks, and misaligned.	Ladder replaced or repaired and meets specifications, and is safe to use as determined by inspection personnel.
Below Ground Cartridge Type	Media	Drawdown of water through the media takes longer than 1 hour, and/or overflow occurs frequently.	Media cartridges replaced.
	Short Circuiting	Flows do not properly enter filter cartridges.	Filter cartridges replaced.

No. 16 – Baffle Oil/Water Separators (API Type)

Maintenance Component	Defect	Condition When Maintenance is Needed	Results Expected When Maintenance is Performed
General	Monitoring	Inspection of discharge water for obvious signs of poor water quality.	Effluent discharge from vault should be clear with out thick visible sheen.
	Sediment Accumulation	Sediment depth in bottom of vault exceeds 6-inches in depth.	No sediment deposits on vault bottom that would impede flow through the vault and reduce separation efficiency.
	Trash and Debris Accumulation	Trash and debris accumulation in vault, or pipe inlet/outlet, floatables and non-floatables.	Trash and debris removed from vault, and inlet/outlet piping.
	Oil Accumulation	Oil accumulations that exceed 1-inch, at the surface of the water.	Extract oil from vault by vactoring. Disposal in accordance with state and local rules and regulations.
	Damaged Pipes	Inlet or outlet piping damaged or broken and in need of repair.	Pipe repaired or replaced.
	Access Cover Damaged/Not Working	Cover cannot be opened, corrosion/deformation of cover.	Cover repaired to proper working specifications or replaced.
	Vault Structure Damage - Includes Cracks in Walls Bottom, Damage to Frame and/or Top Slab	See “Catch Basins” (No. 5)	Vault replaced or repairs made so that vault meets design specifications and is structurally sound.
		Cracks wider than 1/2-inch at the joint of any inlet/outlet pipe or evidence of soil particles entering through the cracks.	Vault repaired so that no cracks exist wider than 1/4-inch at the joint of the inlet/outlet pipe.
	Baffles	Baffles corroding, cracking, warping and/or showing signs of failure as determined by maintenance/inspection person.	Baffles repaired or replaced to specifications.
	Access Ladder Damaged	Ladder is corroded or deteriorated, not functioning properly, not securely attached to structure wall, missing rungs, cracks, and misaligned.	Ladder replaced or repaired and meets specifications, and is safe to use as determined by inspection personnel.

No. 17 – Coalescing Plate Oil/Water Separators

Maintenance Component	Defect	Condition When Maintenance is Needed	Results Expected When Maintenance is Performed
General	Monitoring	Inspection of discharge water for obvious signs of poor water quality.	Effluent discharge from vault should be clear with no thick visible sheen.
	Sediment Accumulation	Sediment depth in bottom of vault exceeds 6-inches in depth and/or visible signs of sediment on plates.	No sediment deposits on vault bottom and plate media, which would impede flow through the vault and reduce separation efficiency.
	Trash and Debris Accumulation	Trash and debris accumulated in vault, or pipe inlet/outlet, floatables and non-floatables.	Trash and debris removed from vault, and inlet/outlet piping.
	Oil Accumulation	Oil accumulation that exceeds 1-inch at the water surface.	Oil is extracted from vault using vactoring methods. Coalescing plates are cleaned by thoroughly rinsing and flushing. Should be no visible oil depth on water.
	Damaged Coalescing Plates	Plate media broken, deformed, cracked, and/or showing signs of failure.	A portion of the media pack or the entire plate pack is replaced depending on severity of failure.
	Damaged Pipes	Inlet or outlet piping damaged or broken and in need of repair.	Pipe repaired and or replaced.
	Baffles	Baffles corroding, cracking, warping and/or showing signs of failure as determined by maintenance/inspection person.	Baffles repaired or replaced to specifications.
	Vault Structure Damage - Includes Cracks in Walls, Bottom, Damage to Frame and/or Top Slab	Cracks wider than 1/2-inch or evidence of soil particles entering the structure through the cracks, or maintenance/inspection personnel determine that the vault is not structurally sound.	Vault replaced or repairs made so that vault meets design specifications and is structurally sound.
		Cracks wider than 1/2-inch at the joint of any inlet/outlet pipe or evidence of soil particles entering through the cracks.	Vault repaired so that no cracks exist wider than 1/4-inch at the joint of the inlet/outlet pipe.
	Access Ladder Damaged	Ladder is corroded or deteriorated, not functioning properly, not securely attached to structure wall, missing rungs, cracks, and misaligned.	Ladder replaced or repaired and meets specifications, and is safe to use as determined by inspection personnel.

No. 18 – Catchbasin Inserts

Maintenance Component	Defect	Conditions When Maintenance is Needed	Results Expected When Maintenance is Performed
General	Sediment Accumulation	When sediment forms a cap over the insert media of the insert and/or unit.	No sediment cap on the insert media and its unit.
	Trash and Debris Accumulation	Trash and debris accumulates on insert unit creating a blockage/restriction.	Trash and debris removed from insert unit. Runoff freely flows into catch basin.
	Media Insert Not Removing Oil	Effluent water from media insert has a visible sheen.	Effluent water from media insert is free of oils and has no visible sheen.
	Media Insert Water Saturated	Catch basin insert is saturated with water and no longer has the capacity to absorb.	Remove and replace media insert
	Media Insert-Oil Saturated	Media oil saturated due to petroleum spill that drains into catch basin.	Remove and replace media insert.
	Media Insert Use Beyond Normal Product Life	Media has been used beyond the typical average life of media insert product.	Remove and replace media at regular intervals, depending on insert product.

No. 19 – Ecology Embankment

Maintenance Component	Defect	Condition When Maintenance is Needed	Results Expected When Maintenance is Performed
No Vegetation Zone adjacent to pavement	Erosion, scour, or vehicular damage	No vegetation zone uneven or clogged so that flows are not uniformly distributed	Level the area and clean so that flows are spread evenly
	Sediment accumulation on edge of pavement	Flows no longer sheeting off of roadway. Sediment accumulation on pavement edge exceeds top of pavement elevation.	Remove sediment deposits such that flows can sheet off of roadway.
Vegetated Filter	Sediment accumulation on grass	Sediment depth exceeds two inches	Remove sediment deposits, re-level so slope is even and flows pass evenly through Ecology Embankment.
	Excessive vegetation or undesirable species	When grass becomes excessively tall; when nuisance weeds and other vegetation starts to take over or shades out desirable vegetation growth characteristics. See also Pierce County Noxious Weeds list at: piercecountyweedboard.wsu.edu/ weedlist.html	Mow grass, control nuisance vegetation such that flow is not impeded. Grass should be mowed to a height that encourages dense, even herbaceous growth.
	Erosion, scour, or vehicular damage	Eroded or scoured areas due to flow channelization, high flows, or vehicular damage.	For ruts or bare areas less than 12 inches wide, repair the damaged area by filling with suitable topsoil. The grass will creep in over the rock in time. If bare areas are large, generally greater than 12 inches wide, the filter strip should be re-graded and re-seeded. For smaller bare areas, overseed when bare spots are evident.
Media Bed	Erosion, scour, or vehicular damage	Eroded or scoured areas due to flow channelization, high flows, or vehicular damage.	For ruts or bare areas less than 12 inches wide, repair the damaged area by filling with suitable media. If bare areas are large, generally greater than 12 inches wide, the media bed should be re-graded.
	Sediment accumulation on media bed	Sediment depth inhibits free infiltration of water	Remove sediment deposits, re-level so slope is even and flows pass freely through the media bed.
Underdrains	Sediment	Depth of sediment within perforated pipe exceeds one-half inch	Flush underdrains through access ports and collect flushed sediment.
General	Trash and debris accumulation	Trash and debris which exceed 5 cubic feet per 1,000 square feet (this is about equal to the amount of trash it would take to fill up one 32-gallow garbage can). In general, there should be no visual evidence of dumping. If less than threshold, all trash and debris will be removed as part of the next scheduled maintenance	Remove trash and debris.

No. 19 – Ecology Embankment

Maintenance Component	Defect	Condition When Maintenance is Needed	Results Expected When Maintenance is Performed
General	Flows are bypassing Ecology Embankment	Evidence of significant flows downslope (rills, sediment, vegetation damage, etc.) of Ecology Embankment	Remove sediment deposits, relevel so slope is even and flows pass evenly through Ecology Embankment. If Ecology Embankment is completely clogged, it may require more extensive repair or replacement.

No. 20 – Bioretention Rain Gardens

Maintenance Component	Defect	Conditions When Maintenance is Needed	Results Expected When Maintenance is Performed
Ponding Area	Cracks or failure in concrete planter reservoir	Cracks wider than ½ inch or maintenance/inspection personnel determine that the vault is not structurally sound	Vault repaired or replaced so that it meets design specification and is structurally sound
	Failure in earthen reservoir (embankments, dikes, berms, and side slopes)	Erosion (gullies/rills) greater than 2 inches around inlets, outlet, and along side slopes	Eliminate source of erosion and stabilize damaged area (regrade, rock, vegetation, erosion control blanket)
		Settlement greater than 4 inches (relative to undisturbed sections of the berm)	Restore to design height
		Downstream face of the berm or embankment wet, seeps or leaks evident	Plug holes. Contact geotechnical engineer ASAP.
		Any evidence of rodent holes or water piping around holes if facility acts as a dam or berm	Eradicate rodents and repair holes (fill and compact)
	Sediment or debris accumulation	Accumulation of sediment or debris	Remove excess sediment or debris. Identify and control the sediment source, if feasible. Facility should be free of material. May contain standing water.
	Rockery reservoir or walls	Rock walls are insecure	Stabilize walls
	Basin inlet via surface flow	Soil is exposed or signs of erosion are visible.	Repair and control erosion sources.
	Basin inlet via concentrated flow (e.g. curb cuts)	Sediment, vegetation, or debris partially or fully blocking inlet structure	Clear the blockage. Identify the source of the blockage and take actions to prevent future blockages.
	Basin inlet splash block failure	Water splashes adjacent buildings	Reconfigure/repair blocks.
		Water disrupts soil media.	
	Inlet/outlet pipe failure	Pipe is damaged.	Repair/replace pipe.
		Pipe is clogged.	Remove roots or debris.
	Outlet pipe/ structure failure	Sediment, vegetation, or debris is partially or fully blocking the outlet structure.	Clear the blockage. Identify the source of the blockage and take actions to prevent future blockages.
	Trash rack failure	Trash or debris present on trash rack.	Clean and dispose of trash.
		Bar screen damaged or missing.	Replace bar screen.
	Check dams and weirs failures	Sediment, vegetation, or debris is partially or fully blocking the check dam or weir.	Clear the blockage. Identify the source of the blockage and take actions to prevent future blockages.
Ponding Area	Check dams and weirs failures	Erosion and/or undercutting is present.	Repair and take preventative measures to prevent future erosion and/or undercutting.

No. 20 – Bioretention Rain Gardens

Maintenance Component	Defect	Conditions When Maintenance is Needed	Results Expected When Maintenance is Performed
	Flow spreader problems	Sediment blocks 35% or more of ports/notches or, sediment fills 35% or more of sediment trap.	Remove and dispose of sediment.
		Grade board/baffle damaged or not level.	Remove and reinstall to level position.
	Overflow/ emergency spillway	Overflow spillway is partially or fully plugged with sediment or debris.	Remove and dispose of sediment.
		Native soil is exposed, or other signs of erosion are present.	Repair erosion and stabilize surface of spillway.
		Spillway armament is missing.	Replace armament.
	Bioretention soil	Water remains in the basin 48 hours or longer after the end of a storm.	Ensure that underdrain (if present) is not clogged. If necessary, clear underdrain. If this is not the problem, the bioretention soil is likely clogged. Remove the upper 2 to 3 inches of soil and replace with imported bioretention soil. Identify sources of clogging and correct.
Vegetation	Bottom swale vegetation	Less than 80% of swale bottom is covered with healthy wetland vegetation.	Plant additional vegetation. Ideally, planting should be performed in the fall or winter.
	Upland slope vegetation	Less than 70% of upland slopes are covered with healthy vegetation.	
	Trees and shrubs	Large trees and shrubs interfere with operation of the basin or access for maintenance	Prune or remove large trees and shrubs.
		Standing dead vegetation is present	Remove standing dead vegetation when covering greater than 10% of the basin area. Replace dead vegetation annually or immediately if necessary to control erosion (e.g. on a steep slope).
	Mulch	Bare spots (without much cover) are present or mulch covers less than 3 inches deep for compost or 4 inches deep for coarse, woody mulch.	Replenish with the appropriate type of mulch to cover bare spots and augment to minimum depth.
	Clippings	Grass or other vegetation clippings accumulate to 2 inches or greater in depth.	Remove clippings.
Vegetation	Noxious weeds	Listed noxious vegetation is present. See Pierce County noxious weed list.	By law, noxious weeds must be removed and disposed immediately. Herbicides and pesticides shall not be used in order to protect water quality.
	Weeds	Weeds are present (unless on edge and providing erosion control).	Remove and dispose of weed material. Herbicides and pesticides shall not be used in order to protect water quality.

No. 20 – Bioretention Rain Gardens

Maintenance Component	Defect	Conditions When Maintenance is Needed	Results Expected When Maintenance is Performed
Irrigation	Irrigation system (if any)	Irrigation system present	Follow manufacturer's instructions for O&M
	Plant watering	Plant establishment period (1-3 years)	Water weekly during periods of no rain to ensure plant establishment
		Longer term period (3+ years)	Water during drought conditions or more often if necessary to maintain plant cover.
Spill Prevention and Response	Spill prevention	Storage or use of potential contaminants in the vicinity of the facility.	Exercise spill prevention measures whenever handling or storing potential contaminants.
	Spill response	Release of pollutants. Call to report any spill to the Washington Dept. of Emergency Management 1-800-258-5990	Cleanup spills as soon as possible to prevent contamination of stormwater.
Training and Documentation	Training/written guidance	Training/written guidance is required for proper O&M	Provide property owners and tenants with proper training and a copy of the O&M manual and Landscape and Maintenance Manual.
Safety	Safety (slopes)	Erosion of sides causes slope to exceed 1:4 or otherwise become a hazard.	Take actions to eliminate the hazard.
	Safety (hydraulic structures)	Hydraulic structures (pipes, culverts, vaults, etc.) become a hazard to children playing in and around the facility.	Take actions to eliminate the hazard (such as covering and securing any openings).
	Line of sight	Vegetation causes some visibility (line of sight) or driver safety issues.	Prune.
Aesthetics	Aesthetics	Damage/vandalism/debris accumulation	Restore facility to original aesthetic conditions.
	Grass/vegetation	Less than 75% of planted vegetation is healthy with a generally good appearance.	Take appropriate maintenance actions (e.g. remove/replace plants, amend soil, etc.)
	Edging	Grass is starting to encroach on swale.	Repair edging.
Pest Control	Mosquitoes	Standing water remains in the basin for more than three days following storms.	Identify the cause of the standing water and take appropriate actions to address the problem (see Bioretention Soil above)
	Rodents	Rodent holes are present near the facility.	Fill and compact the soil around the holes (refer to Integrated Pest Management).

No. 21 - Cistern

Maintenance Component	Defect	Conditions When Maintenance Is Needed	Results Expected When Maintenance Is Performed
Collection Facilities	Roof	Debris has accumulated	Remove debris
	Gutter	Debris has accumulated.	Clean gutters (the most critical cleaning is mid- to late-spring to flush the pollen deposits from surrounding trees).
	Screens at the top of the downspout and cistern inlet	Screen has deteriorated.	Replace
		Preventative maintenance	Clear screen of any accumulated debris.
	Low flow orifice	Preventative maintenance.	Clean low flow orifice.
	Overflow pipe	Pipe is damaged.	Repair/replace
		Pipe is clogged.	Remove debris.
	Cistern	Debris has accumulated in the bottom of the tank.	Remove debris.
Training and Documentation	Training/written guidance	Training/written guidance is required for proper O&M.	Provide property owners and tenants with proper training and a copy of the O&M manual.
Safety	Access and safety	Access to cistern required for maintenance or cleaning.	Any cistern detention systems opening that could allow the entry of people must be marked: “DANGER – CONFINED SPACE”.
Pest Control	Mosquitoes	Standing water remains for more than three days following storms.	Ensure cause of standing water is corrected. Also ensure all inlets, overflows, and other openings are protected with mosquito screens.

No. 22 – Compost Amended Soil

Maintenance Component	Defect	Conditions When Maintenance Is Needed	Results Expected When Maintenance Is Performed
General Facility Requirements	Soil media (maintain high organic soil content)	Vegetation not fully covering ground surface	Re-mulch landscape beds with 2-3 inches of mulch until the vegetation fully closes over the ground surface
		Preventative maintenance	Return leaf fall and shredded woody materials from the landscape to the site as mulch.
			On turf areas, “grasscycle” ((mulch-mow or leave the clippings) to build turf health.
			Avoid broadcast use of pesticides (bug and weed killers) like “weed & feed”, which damage the soil life.
			Where fertilization is needed (mainly turf and annual flower beds), use a moderate fertilization program that relies on natural organic fertilizers (like compost) or slow-release synthetic balanced fertilizers.
	Compaction	Soils become waterlogged, do not appear to be infiltrating.	To remediate, aerate soil, till or further amend soil. If drainage is still slow, consider investigating alternative causes (e.g. high wet-season groundwater levels, low-permeability soils). Also consider land use and protection from compacting activities. If areas are turf, aerate compacted areas and top dress them with ¼ to ½ inch of compost to renovate them.
	Erosion/scouring	Areas of potential erosion are visible.	Take steps to repair or prevent erosion. Identify and address the causes of erosion.
General Facility Requirements	Grass/vegetation	Less than 75% of planted vegetation is healthy with a generally good appearance.	Take appropriate maintenance actions (e.g. remove/replace plants).
	Noxious weeds	Listed noxious vegetation is present. See Pierce County noxious weed list.	By law, noxious weeds must be removed and disposed immediately. Herbicides and pesticides shall not be used in order to protect water quality.
	Weeds	Weeds are present.	Remove and dispose of weed material. Herbicides and pesticides shall not be used in order to protect water quality.

No. 23 – Vegetated Roof

Maintenance Component	Defect	Conditions When Maintenance Is Needed	Results Expected When Maintenance Is Performed
Soil/Growth Medium	Growth medium	Water does not permeate growth media (runs off soil surface)	Aerate or replace media
	Fallen leaves/debris	Fallen leaves or debris are present.	Remove/dispose
	Erosion/scouring	Areas of potential erosion are visible.	Take steps to repair or prevent erosion. Stabilize with additional soil substrate/growth medium and additional plants.
System Structural Components	General	Structural components are present.	Inspect structural components for deterioration or failure. Repair/replace as necessary.
	Inlet pipe	Sediment, vegetation, or debris blocks 35% or more of inlet structure	Clear blockage. Identify and correct any problems that led to blockage.
		Inlet pipe is in poor condition.	Repair/replace.
		Inlet pipe is clogged.	Remove roots or debris.
Vegetation	Coverage	Vegetative coverage falls below 75% (unless design specifications stipulate less than 75% coverage).	Install more vegetation.
	Noxious weeds	Listed noxious vegetation is present. See Pierce County noxious weed list.	By law, noxious weeds must be removed and disposed immediately. Herbicides and pesticides shall not be used in order to protect water quality.
	Weeds	Weeds are present.	Remove and dispose of weed material. Herbicides and pesticides shall not be used in order to protect water quality.
	Plants	Dead vegetation is present.	Remove dead vegetation when covering greater than 10% of basin area. Replace dead vegetation annually or immediately if necessary to control erosion.

No. 23 – Vegetated Roof

Maintenance Component	Defect	Conditions When Maintenance Is Needed	Results Expected When Maintenance Is Performed
Irrigation	Irrigation system (if any)	Irrigation system present	Follow manufacturer's instructions for O&M.
	Plant watering	Plant establishment period (1-3 years)	Water weekly during periods of no rain to ensure plant establishment
		Longer term period (3+ years)	Water during drought conditions or more often if necessary to maintain plant cover.
Spill Prevention and Response	Spill prevention	Storage or use of potential contaminants in the vicinity of the facility.	Exercise spill prevention measures whenever handling or storing potential contaminants.
	Spill response	Release of pollutants. Call to report any spill to the Washington Dept. of Emergency Management 1-800-258-5990	Cleanup spills as soon as possible to prevent contamination of stormwater.
Training and Documentation	Training/written guidance	Training/written guidance is required for proper O&M.	Provide property owners and tenants with proper training and a copy of the O&M manual and Landscape and Maintenance manual.
Safety	Access and Safety	Egress and ingress routes	Maintain egress and ingress routes to design standards and fire codes.
Aesthetics	Aesthetics	Damage/vandalism/debris accumulation	Restore facility to original aesthetic conditions.
	Grass/vegetation	Less than 75% of planted vegetation is healthy with a generally good appearance.	Take appropriate maintenance actions (e.g. remove/replace plants, amend soils, etc.)
Pest Control	Mosquitoes	Standing water remains for more than three days following a storm.	Remove standing water. Identify the cause of the standing water and take appropriate action to address the problem (improve drainage).

No. 24 – Pervious Pavement

Maintenance Component	Defect	Conditions When Maintenance Is Needed	Results Expected When Maintenance Is Performed
Surface	Pervious asphalt or cement concrete	Maintenance to prevent clogging with fine sediment.	Use conventional street sweepers equipped with vacuums.
			Prohibit use of sand and sealant application and protect from construction runoff.
		Major cracks or trip hazards	Fill with patching mixes. Large cracks and settlement may require cutting and replacing the pavement section.
		Utility cuts	Any damage or change due to utility cuts must be replaced in kind.
	Fallen leaves/debris	Fallen leaves or debris	Remove/dispose
	Interlocking concrete paver blocks	Interlocking paving block missing or damaged.	Replace paver block
		Settlement of surface	May require resettling
		Sediment or debris accumulation between paver blocks	Remove/dispose
		Loss of void material between paver blocks	Refill per manufacturer's recommendations.
		Varied conditions	Perform O&M per manufacturer's recommendations.

Appendix E Wetlands and Stormwater Management Guidelines

As Amended from Chapter 14 of "Wetlands and Urbanization, Implications for the Future," by Richard R. Horner, Amanda A. Azous, Klaus O. Richter, Sarah S. Cooke, Lorin E. Reinelt and Kern Ewing

If you are unfamiliar with these guidelines, read the description of the approach and organization that follows. If you are familiar, proceed directly to the appropriate guide sheet(s) for guidelines covering your issue(s) or objective(s):

Guide Sheet 1: Comprehensive Landscape Planning for Wetlands and Stormwater Management

Guide Sheet 2: Wetlands Protection Guidelines

Approach and Organization of the Management Guidelines

Introduction

The Puget Sound Wetlands and Stormwater Management Research Program performed comprehensive research with the goal of deriving strategies that protect wetland resources in urban and urbanizing areas, while also benefiting the management of urban stormwater runoff that can affect those resources. The research primarily involved long-term comparisons of wetland ecosystem characteristics before and after their watersheds urbanized, and between a set of wetlands that became affected by urbanization (treatment sites) and a set whose watersheds did not change (control sites). This work was supplemented by shorter term and more intensive studies of pollutant transport and fate in wetlands, several laboratory experiments, and ongoing review of relevant work being performed elsewhere. These research efforts were aimed at defining the types of impacts that urbanization can cause and the degree to which they develop under different conditions, in order to identify means of avoiding or minimizing impacts that impair wetland structure and functioning. The program's scope embraced both situations where urban drainage incidentally affects wetlands in its path, as well as those in which direct stormwater management actions change wetlands' hydrology, water quality or both.

This document presents preliminary management guidelines for urban wetlands and their stormwater discharges based on the research results. The set of guidelines is the principal vehicle to implement the research findings in environmental planning and management practice.

Guidelines Scope and Underlying Principles.

NOTE: For terms in **boldface** type see item 1 under Support Materials.

1. These provisions currently have the status of guidelines rather than requirements. Application of these guidelines does not fulfill assessment and permitting requirements that may be associated with a project. It is, in general, necessary to follow the stipulations of the State Environmental Policy Act and to contact such agencies as the local planning agency;

the Washington Departments of Ecology, Fisheries, and Wildlife; the U. S. Environmental Protection Agency; and the U. S. Army Corps of Engineers.

2. Using the guidelines should be approached from a problem-solving viewpoint. The "problem" is regarded to be accomplishing one or more particular planning or management objectives involving a **wetland** potentially or presently affected by stormwater drainage from an urban or urbanizing area. The objectives can be broad, specific, or both. Broad objectives involve comprehensive planning and subsequent management of a drainage catchment or other **landscape unit** containing one or more wetlands. Specific objectives pertain to managing a wetland having particular attributes to be sustained. Of course, the prospect for success is greater with ability to manage the whole landscape influencing the wetland, rather than just the wetland itself.

3. The guidelines are framed from the standpoint that some change in the landscape has the potential to modify the physical and chemical **structure** of the wetland environment, which in turn could alter biological communities and the wetland's ecological **functions**. The general objective in this framework would be to avoid or minimize negative ecological change. This view is in contrast to one in which a wetland has at some time in the past experienced negative change, and consequent ecological degradation, and where the general objective would be to recover some or all of the lost structure and functioning through **enhancement** or **restoration** actions. Direct attention to this problem was outside the scope of the Puget Sound Wetlands and Stormwater Management Research Program. However, the guidelines do give information that applies to enhancement and restoration. For example, attempted restoration of a diverse amphibian community would not be successful if the water level fluctuation limits consistent with high amphibian species richness are not observed.

4. The guidelines can be applied with whatever information concerning the problem is available. Of course, the comprehensiveness and certainty of the outcome will vary with the amount and quality of information employed. The guidelines can be applied in an iterative fashion to improve management understanding as the information improves. Wetlands Guidance Appendix 1 lists the information needed to perform basic analyses, followed by other information that can improve the understanding and analysis.

5. These guidelines emphasize avoiding structural, hydrologic, and water quality **modifications** of existing wetlands to the extent possible in the process of urbanization and the management of urban stormwater runoff.

6. In pursuit of this goal, the guidelines take a systematic approach to management problems that potentially involve both urban stormwater (quantity, quality, or both) and wetlands. The consideration of wetlands involves their area extent, **values**, and functions. This approach emphasizes a comprehensive analysis of alternatives to solve the identified problem. The guidelines encourage conducting the analysis on a landscape scale and considering all of the possible stormwater management alternatives, which may or may not involve a wetland. They favor **source control best management practices** (BMPs) and **pre-treatment** of stormwater runoff prior to release to wetlands.

7. Furthermore, the guidelines take a holistic view of managing wetland resources in an urban setting. Thus, they recognize that urban wetlands have the potential to be affected structurally and functionally whether or not they are formally designated for stormwater management purposes. Even if an urban wetland is not structurally or hydrologically engineered for such purposes, it may experience altered hydrology (more or less water), reduced water quality, and a host of other impacts related to urban conditions. It is the objective of the guidelines to avoid or reduce the negative effects on wetland resources from both specific stormwater management actions and incidental urban impacts.

Support Materials

1. The guidelines use certain terms that require definition to ensure that the intended meaning is conveyed to all users. Such terms are printed in **boldface** the first time that they appear in each guide sheet, and are defined in Wetlands Guidance Appendix B.

2. The guideline provisions were drawn principally from the available results of the Puget Sound Wetlands and Stormwater Management Research Program, as set forth in Sections 2 and 3 of the program's summary publication, Wetlands and Urbanization, Implications for the Future (Horner et al. 1996). Where the results in this publication are the basis for a numerical provision, a separate reference is not given. Numerical provisions based on other sources are referenced. See Wetlands Guidance References at the end of this appendix.

3. Appendix 3 presents a list of plant species native to wetlands in the Puget Sound Region. This appendix is intended for reference by guideline users who are not specialists in wetland botany. However, non-specialists should obtain expert advice when making decisions involving vegetation.

4. Appendix 4 compares the water chemistry characteristics of *Sphagnum* bog and fen wetlands (termed **priority peat wetlands** in these guidelines) with more common wetland communities. These bogs and fens appear to be the most sensitive among the Puget Sound lowland wetlands to alteration of water chemistry, and require special water quality management to avoid losses of their relatively rare communities.

Guide Sheet 1: Comprehensive Landscape Planning for Wetlands and Stormwater Management

Wetlands in newly developing areas will receive urban effects even if not specifically "used" in stormwater management. Therefore, the task is proper overall management of the resources and protection of their general **functioning**, including their role in storm drainage systems. Stormwater management in newly developing areas is distinguished from management in already developed locations by the existence of many more feasible stormwater control options prior to development. The guidelines emphasize appropriate selection among the options to achieve optimum overall resource protection benefits, extending to downstream receiving waters and ground water aquifers, as well as to wetlands.

The comprehensive planning guidelines are based on two principles that are recognized to create the most effective environmental management: (1) the best management policies for the protection of wetlands and other natural resources are those that prevent or minimize the development of impacts at potential sources; and (2) the best management strategies are self-perpetuating, that is they do not

require periodic infusions of capital and labor. To apply these principles in managing wetlands in a newly developing area, carry out the following steps.

Guide Sheet 1A: Comprehensive Planning Steps

1. Define the **landscape unit** subject to comprehensive planning. Refer to the definition of landscape unit in Appendix 2 for assistance in defining it.

2. Begin the development of a plan for the landscape unit with attention to the following general principles:

   - Formulate the plan on the basis of clearly articulated community goals. Carefully identify conflicts and choices between retaining and protecting desired resources and community growth.
   - Map and assess land suitability for urban uses. Include the following landscape features in the assessment: forested land, open unforested land, steep slopes, erosion-prone soils, foundation suitability, soil suitability for waste disposal, aquifers, aquifer recharge areas, wetlands, floodplains, surface waters, agricultural lands, and various categories of urban land use. When appropriate, the assessment can highlight outstanding local or regional resources that the community determines should be protected (e. g., a fish run, scenic area, recreational area, threatened species habitat, farmland). Mapping and assessment should recognize not only these resources but also additional areas needed for their sustenance.

3. Maximize natural water storage and infiltration opportunities within the landscape unit and outside of existing wetlands, especially:

   - Promote the conservation of forest cover. Building on land that is already deforested affects basin hydrology to a lesser extent than converting forested land. Loss of forest cover reduces interception storage, detention in the organic forest floor layer, and water losses by evapotranspiration, resulting in large peak runoff increases and either their negative effects or the expense of countering them with structural solutions.

   - Maintain natural storage reservoirs and drainage corridors, including depressions, areas of permeable soils, swales, and intermittent streams. Develop and implement policies and regulations to discourage the clearing, filling, and channelization of these features. Utilize them in drainage networks in preference to pipes, culverts, and engineered ditches.

   - In evaluating infiltration opportunities refer to the stormwater management manual for the jurisdiction and pay particular attention to the selection criteria for avoiding groundwater contamination and poor soils and hydrogeological conditions that cause these facilities to fail. If necessary, locate developments with large amounts of impervious surfaces or a potential to produce relatively contaminated runoff away from groundwater recharge areas. Relatively dense developments on glacial outwash soils may require additional runoff treatment to protect groundwater quality.

4. Establish and maintain **buffers** surrounding wetlands and in riparian zones as required by local regulations or recommended by the Puget Sound Water Quality Authority's wetland guidelines. Also, maintain interconnections among wetlands and other natural habitats to allow for wildlife movements.

5. Determine whether the wetland has a breeding, native amphibian population. A survey should be conducted in the spring.

6. Take specific management measures to avoid general urban impacts on wetlands and other water bodies (e. g., littering, vegetation destruction, human and pet intrusion harmful to wildlife).

7. To support management of runoff water quantity, perform a hydrologic analysis of the contributing drainage catchment to define the type and extent of flooding and stream channel erosion problems associated with existing development, redevelopment, or new development that require control to protect the beneficial uses of receiving waters, including wetlands. This analysis should include assembly of existing flow data and hydrologic modeling as necessary to establish conditions limiting to attainment of beneficial uses. Modeling should be performed as directed by the stormwater management manual in effect in the jurisdiction.

8. In wetlands previously relatively unaffected by human activities, manage stormwater quantity to attempt to match the **pre-development hydroperiod** and **hydrodynamics**. In wetlands whose hydrology has been disturbed, consider ways of reducing hydrologic impacts. This provision involves not only management of high runoff volumes and rates of flow during the wet season, but also prevention of water supply depletion during the dry season. The latter guideline may require flow augmentation if urbanization reduces existing surface or groundwater inflows. Refer to Guide Sheet 2, Wetland Protection Guidelines, for detail on implementing these guidelines.

9. Assess alternatives for the control of runoff water quantities as follows:

    a. Define the runoff quantity problem subject to management by analyzing the proposed land development action.

    b. For existing development or **redevelopment**, assess possible alternative solutions that are applicable at the site of the problem occurrence, including:

        – Protect health, safety, and property from flooding by removing habitation from the flood plain.

        – Prevent stream channel erosion by stabilizing the eroding bed and/or bank area with **bioengineering** techniques, preferably, or by structurally reinforcing it, if this solution would be consistent with the protection of aquatic habitats and beneficial uses of the stream (refer to Chapter 173-201A of the Washington Administrative Code (WAC) for the definition of beneficial uses).

c. For new development or redevelopment, assess possible regulatory and incentive land use control alternatives, such as density controls, clearing limits, impervious surface limits, transfer of development rights, purchase of conservation areas, etc.

d. If the alternatives considered in Steps 9a or 9b cannot solve an existing or potential problem, perform an analysis of the contributing drainage catchment to assess possible alternative solutions that can be applied **on-site** or on a **regional** scale. The most appropriate solution or combination of alternatives should be selected with regard to the specific opportunities and constraints existing in the drainage catchment. For new development or redevelopment, on-site facilities that should be assessed include, in approximate order of preference:

   – Infiltration basins or trenches;
   – Retention/detention ponds;
   – Below-ground vault or tank storage;
   – Parking lot detention.

   Regional facilities that should be assessed for solving problems associated with new development, redevelopment, or existing development include:

   – Infiltration basins or trenches;
   – Detention ponds;
   – **Constructed wetlands;**
   – Bypassing a portion of the flow to an acceptable receiving water body, with treatment as required to protect water quality and other special precautions as necessary to prevent downstream impacts.

e. Consider structurally or hydrologically engineering an existing wetland for water quantity control only if upland alternatives are inadequate to solve the existing or potential problem. To evaluate the possibility, refer to the Storm-water Wetland Assessment Criteria in Guide Sheet 1B.

10. Place strong emphasis on water resource protection during construction of new development. Establish effective erosion control programs to reduce the sediment loadings to receiving waters to the maximum extent possible. No preexisting wetland or other water body should ever be used for the sedimentation of solids in construction-phase runoff.

11. In wetlands previously relatively unaffected by human activities, manage stormwater quality to attempt to match pre-development water quality conditions. To support management of runoff water quality, perform an analysis of the contributing drainage catchment to define the type and extent of runoff water quality problems associated with existing development, redevelopment, or new development that require control to protect the beneficial uses of receiving waters, including wetlands. This analysis should incorporate the hydrologic assessment performed under step 7 and include identification of key water pollutants, which may include solids, oxygen-demanding substances, nutrients, metals, oils, trace organics,

and bacteria, and evaluation of the potential effects of water pollutants throughout the drainage system.

12. Assess alternatives for the control of runoff water quality as follows:

    a. Perform an analysis of the contributing drainage catchment to assess possible alternative solutions that can be applied on-site or on a regional scale. The most appropriate solution or combination of alternatives should be selected with regard to the specific opportunities and constraints existing in the drainage catchment. Consider both **source control BMPs** and **treatment BMPs** as alternative solutions before considering use of existing wetlands for quality improvement according to the following considerations:

        – Implementation of source control BMPs prevent the generation or release of water pollutants at potential sources. These alternatives are generally both more effective and less expensive than treatment controls. They should be applied to the maximum extent possible to new development, redevelopment, and existing development.

        – Treatment BMPs capture water pollutants after their release. This alternative often has limited application in existing developments because of space limitations, although it can be employed in new development and when redevelopment occurs in already developed areas. Refer to Minimum Requirement #6 in Volume 1 of the Stormwater Management Manual for Western Washington to determine whether a treatment facility is necessary for your site. If a facility is required, refer to Chapter 4 of Volume I, or Chapter 2 of Volume V to determine which treatment requirement – basic, enhanced, phosphorus, or oil control - applies to your site. Then refer to the corresponding BMP menu for that requirement in Chapter 3 of Volume V. From the menu select a BMP that fits with your project site.

    b. Consider structurally or hydrologically engineering an existing wetland for water quality control only if upland alternatives are inadequate to solve the existing or potential problem. Use of Waters of the State and Waters of the United States, including wetlands, for the treatment or conveyance of wastewater, including stormwater, is prohibited under state and federal law. Discussions with federal and state regulators during the research program led to development of a statement concerning the use of existing wetlands for improving stormwater quality (**polishing**), as follows. Such use is subject to analysis on a case-by-case basis and may be allowed only if the following conditions are met:

        – If **restoration** or **enhancement** of a previously **degraded** wetland is required, and if the upgrading of other wetland functions can be accomplished along with benefiting runoff quality control, and

        – If appropriate source control and treatment BMPs are applied in the contributing catchment on the basis of the analysis in Step 12a, and any legally adopted water quality standards for wetlands are observed.

If these circumstances apply, refer to the Stormwater Wetland Assessment Criteria in Guide Sheet 1B to evaluate further.

13. Stimulate public awareness of and interest in wetlands and other water resources in order to establish protective attitudes in the community. This program should include:

    - Education regarding the use of fertilizers and pesticides, automobile maintenance, the care of animals to prevent water pollution, and the importance of retaining buffers;
    - Descriptive signboards adjacent to wetlands informing residents of the wetland type, its functions, the protective measures being taken, etc.
    - If beavers are present in a wetland, educate residents about their ecological role and value and take steps to avoid human interference with beavers.

Guide Sheet 1B: Stormwater Wetland Assessment Criteria

This guide sheet gives criteria that disqualify a natural wetland from being structurally or hydrologically engineered for control of stormwater quantity, quality, or both. These criteria should be applied only after performing the alternatives analysis outlined in Guide Sheet 1A.

1. A wetland <u>should not</u> be structurally or hydrologically engineered for runoff quantity or quality control and should be given maximum protection from overall urban impacts (see Guide Sheet 2, Wetland Protection Guidelines) under any of the following circumstances:

    - In its present state it is primarily an **estuarine** or **forested wetland** or a **priority peat system**.
    - It is a rare or irreplaceable wetland type, as identified by the Washington Natural Heritage Program, the Puget Sound Water Quality Preservation Program, or local government.
    - It provides **rare, threatened, or endangered species** habitat that could be impaired by the proposed action. Determining whether or not the conserved species will be affected by the proposed project requires a careful analysis of its requirements in relation to the anticipated habitat changes.

    In general, the wetlands in these groups are classified in Categories I and II in the Puget Sound Water Quality Authority's draft wetland guidelines.

2. A wetland <u>can be considered</u> for structural or hydrological modification for runoff quantity or quality control if most of the following circumstances exist:

    - It is classified in Category IV in the Puget Sound Water Quality Authority's draft wetland guidelines. In general, Category IV wetlands have monotypic vegetation of similar age and class, lack special habitat features, and are isolated from other aquatic systems.
    - The wetland has been previously **disturbed** by human activity, as evidenced by agriculture, fill, ditching, and/or introduced or **invasive weedy plant species**.

- The wetland has been deprived of a significant amount of its water supply by draining or previous urbanization (e. g., by loss of groundwater supply), and stormwater runoff is sufficient to augment the water supply. A particular candidate is a wetland that has experienced an increased summer dry period, especially if the drought has been extended by more than two weeks.
- Construction for structural or hydrologic modification in order to provide runoff quantity or quality control will disturb relatively little of the wetland.
- The wetland can provide the required storage capacity for quantity or quality control through an outlet orifice modification to increase storage of water, rather than through raising the existing overflow. Orifice modification is likely to require less construction activity and consequent negative impacts.
- Under existing conditions the wetland's experiences a relatively high degree of water level fluctuation and a range of velocities (i.e., a wetland associated with substantially flowing water, rather than one in the headwaters or entirely isolated from flowing water).
- The wetland does not exhibit any of the following features:
  - Significant priority peat system or forested zones that will experience substantially altered hydroperiod as a result of the proposed action;
  - Regionally **unusual biological community types**;
  - Animal habitat features of relatively high value in the region (e. g., a protected, undisturbed area connected through undisturbed corridors to other valuable habitats, an important breeding site for protected species);
  - The presence of protected commercial or sport fish;
  - Configuration and topography that will require significant modification that may threaten fish stranding;
  - A relatively high degree of public interest as a result of, for example, offering valued local open space or educational, scientific, or recreational opportunities, unless the proposed action would enhance these opportunities;
- The wetland is threatened by potential impacts exclusive of stormwater management, and could receive greater protection if acquired for a stormwater management project rather than left in existing ownership.
- There is good evidence that the wetland actually can be restored or enhanced to perform other functions in addition to runoff quantity or quality control.
- There is good evidence that the wetland lends itself to the effective application of the Wetland Protection Guidelines in Guide Sheet 2.
- The wetland lies in the natural routing of the runoff. Local regulations often prohibit drainage diversion from one basin to another.
- The wetland allows runoff discharge at the natural location.

Guide Sheet 2: Wetland Protection Guidelines

This guide sheet provides information about likely changes to the ecological **structure** and **functioning** of **wetlands** that are incidentally subject to the effects of an urban or urbanizing watershed or are **modified** to supply runoff water quantity or quality control benefits. The guide sheet also recommends management actions that can avoid or minimize deleterious changes in these wetlands.

Guide Sheet 2A: General Wetland Protection Guidelines

1. Consult regulations issued under federal and state laws that govern the discharge of pollutants. Wetlands are classified as "Waters of the United States" and "Waters of the State" in Washington.

2. Maintain the wetland **buffer** required by local regulations or recommended by the Puget Sound Water Quality Authority's draft wetland guidelines.

3. Retain areas of native vegetation connecting the wetland and its buffer with nearby wetlands and other contiguous areas of native vegetation.

4. Avoid compaction of soil and introduction of exotic plant species during any work in a wetland.

5. Take specific site design and maintenance measures to avoid general urban impacts (e. g., littering and vegetation destruction). Examples are protecting existing buffer zones; discouraging access, especially by vehicles, by plantings outside the wetland; and encouragement of stewardship by a homeowners' association. Fences can be useful to restrict dogs and pedestrian access, but they also interfere with wildlife movements. Their use should be very carefully evaluated on the basis of the relative importance of intrusive impacts versus wildlife presence. Fences should generally not be installed when wildlife would be restricted and intrusion is relatively minor. They generally should be used when wildlife passage is not a major issue and the potential for intrusive impacts is high. When wildlife movements and intrusion are both issues, the circumstances will have to be weighed to make a decision about fencing.

6. If the wetland inlet will be modified for the stormwater management project, use a diffuse flow method, such as a spreader swale, to discharge water into the wetland in order to prevent flow channelization.

Guide Sheet 2B: Guidelines for Protection from Adverse Impacts of Modified Runoff Quantity Discharged to Wetlands

1. Protection of wetland plant and animal communities depends on controlling the wetland's **hydroperiod**, meaning the pattern of fluctuation of water depth and the frequency and duration of exceeding certain levels, including the length and onset of drying in the summer. A hydrologic assessment is useful to measure or estimate elements of the hydroperiod under existing **pre-development** and anticipated **post-development** conditions. This assessment should be performed with the aid of a qualified hydrologist. Post-development estimates of watershed hydrology and wetland hydroperiod must include the cumulative

effect of all anticipated watershed and wetland modifications. Provisions in these guidelines pertain to the full anticipated build-out of the wetland's watershed.

This analysis hypothesizes a fluctuating water stage over time before development that could fluctuate more, both higher and lower after development; these greater fluctuations are termed **stage excursions**. The guidelines set limits on the frequency and duration of excursions, as well as on overall water level fluctuation, after development.

To determine existing hydroperiod use one of the following methods, listed in order of preference:

- Estimation by a continuous simulation computer model--The model should be calibrated with at least one year of data taken using a continuously recording level gage under existing conditions and should be run for the historical rainfall period. The resulting data can be used to express the magnitudes of depth fluctuation, as well as the frequencies and durations of surpassing given depths. [Note: Modeling that yields high quality information of the type needed for wetland hydroperiod analysis is a complex subject. Providing guidance on selecting and applying modeling options is beyond the scope of these guidelines but is being developed by King County Surface Water Management Division and other local jurisdictions. An alternative possibility to modeling depths, frequencies, and durations within the wetland is to model durations above given discharge levels entering the wetland over various time periods (e. g., seasonal, monthly, weekly). This option requires further development.]
- Measurement during a series of time intervals (no longer than one month in length) over a period of at least one year of the maximum water stage, using a crest stage gage, and instantaneous water stage, using a staff gage--The resulting data can be used to express water level fluctuation (WLF) during the interval as follows:

  Average base stage = (Instantaneous stage at beginning of interval + Instantaneous stage at end of interval)/2

  WLF = Crest stage - Average base stage

  Compute mean annual and mean monthly WLF as the arithmetic averages for each year and month for which data are available.

To forecast future hydroperiod use one of the following methods, listed in order of preference:

- Estimation by the continuous simulation computer model calibrated during pre-development analysis and run for the historical rainfall period--The resulting data can be used to express the magnitudes of depth fluctuation, as well as the frequencies and durations of surpassing given depths. [Note: Post-development modeling results should generally be compared with pre-development modeling results, rather than directly with field measurements, because different sets of assumptions underlie modeling and monitoring. Making pre- and post-development comparisons on the

basis of common assumptions allows cancellation of errors inherent in the assumptions.]

- Estimation according to general relationships developed from the Puget Sound Wetlands and Stormwater Management Program Research Program, as follows (in part adapted from Chin 1996):
  - Mean annual WLF is very likely (100% of cases measured) to be < 20 cm (8 inches or 0.7 ft) if total impervious area (TIA) cover in the watershed is < 6% (roughly corresponding to no more than 15% of the watershed converted to urban land use).
  - Mean annual WLF is very likely (89% of cases measured) to be > 20 cm if TIA in the watershed is > 21% (roughly corresponding to more than 30% of the watershed converted to urban land use).
  - Mean annual WLF is somewhat likely (50% of cases measured) to be > 30 cm (1.0 ft) if TIA in the watershed is > 21% (roughly corresponding to more than 30% of the watershed converted to urban land use).
  - Mean annual WLF is likely (75% of cases measured) to be > 30 cm, and somewhat likely (50% of cases measured) to be 50 cm (20 inches or 1.6 ft) or higher, if TIA in the watershed is > 40% (roughly corresponding to more than 70% of the watershed converted to urban land use).
  - The frequency of stage excursions greater than 15 cm (6 inches or 0.5 ft) above or below pre-development levels is somewhat likely (54% of cases measured) to be more than six per year if the mean annual WLF increases to > 24 cm (9.5 inches or 0.8 ft).
  - The average duration of stage excursions greater than 15 cm above or below pre-development levels is likely (69% of cases measured) to be more than 72 hours if the mean annual WLF increases to > 20 cm.

2. The following hydroperiod limits characterize wetlands with relatively high vegetation species richness and apply to <u>all zones</u> within <u>all wetlands</u> over the <u>entire year</u>. If these limits are exceeded, then species richness is likely to decline. If the analysis described above forecasts exceedences, one or more of the management strategies listed in step 5 should be employed to attempt to stay within the limits.

   - <u>Mean annual WLF</u> (and <u>mean monthly WLF</u> for every month of the year) does not exceed 20 cm. Vegetation species richness decrease is likely with: (1) a mean annual (and mean monthly) WLF increase of more than 5 cm (2 inches or 0.16 ft) if pre-development mean annual (and mean monthly) WLF is greater than 15 cm, or (2) a mean annual (and mean monthly) WLF increase to 20 cm or more if pre-development mean annual (and mean monthly) WLF is 15 cm or less.
   - The <u>frequency of stage excursions</u> of 15 cm above or below pre-development stage does not exceed an annual average of six. Note: A short-term lagging or advancement of the continuous record of water levels is acceptable. The 15 cm limit applies to the temporary increase in maximum water surface elevations (hydrograph

peaks) after storm events and the maximum decrease in water surface elevations (hydrograph valley bottoms) between events and during the dry season.

- The duration of stage excursions of 15 cm above or below pre-development stage does not exceed 72 hours per excursion. Note: A short-term lagging or advancement of the continuous record of water levels is acceptable. However, the 15 cm limit applies throughout the entire hydrograph, not just the peaks and valleys.
- The total dry period (when pools dry down to the soil surface everywhere in the wetland) does not increase or decrease by more than two weeks in any year.
- Alterations to watershed and wetland hydrology that may cause perennial wetlands to become **vernal** are avoided.

3. The following hydroperiod limit characterizes **priority peat wetlands** (bogs and fens as more specifically defined by the Washington Department of Ecology) and applies to all zones over the entire year. If this limit is exceeded, then characteristic bog or fen wetland vegetation is likely to decline. If the analysis described above forecasts exceedance, one or more of the management strategies listed in step 5 should be employed to attempt to stay within the limit.

   - The duration of stage excursions above the pre-development stage does not exceed 24 hours in any year.

     NOTE: This guideline is in addition to the guidelines in #2 directly above. To apply this guideline a continuous simulation computer model needs to be employed. The model should be calibrated with data taken under existing conditions at the wetland being analyzed and then used to forecast post-development duration of excursions.

4. The following hydroperiod limits characterize wetlands inhabited by breeding native amphibians and apply to breeding zones during the period 1 February through 31 May. If these limits are exceeded, then amphibian breeding success is likely to decline. If the analysis described above forecasts exceedences, one or more of the management strategies listed in step 5 should be employed to attempt to stay within the limits.

   - The magnitude of stage excursions above or below the pre-development stage should not exceed 8 cm for more than 24 hours in any 30-day period.

     NOTE: To apply this guideline a continuous simulation computer model needs to be employed. The model should be calibrated with data taken under existing conditions at the wetland being analyzed and then used to forecast post-development magnitude and duration of excursions.

5. If it is expected that the hydroperiod limits stated above could be exceeded, consider strategies such as:

   - Reduction of the level of development;
   - Increasing runoff infiltration

NOTE: Infiltration is prone to failure in many Puget Sound Basin locations with glacial till soils and generally requires **pretreatment** to avoid clogging. In other situations infiltrating urban runoff may contaminate groundwater. Consult the stormwater management manual adopted by the jurisdiction and carefully analyze infiltration according to its prescriptions.

- Increasing runoff storage capacity; and
- Selective runoff bypass.

6. After development, monitor hydroperiod with a continuously recording level gauge or staff and crest stage gauges. If the applicable limits are exceeded, consider additional applications of the strategies in step 5 that may still be available. It is also recommended that goals be established to maintain key vegetation species, amphibians, or both, and that these species be monitored to determine if the goals are being met.

Guide Sheet 2C: Guidelines for Protection from Adverse Impacts of Modified Runoff Quality Discharged to Wetlands

1. Require effective erosion control at any construction sites in the wetland's drainage catchment.

2. Institute a program of **source control BMPs** to minimize the generation of pollutants that will enter storm runoff that drains to the wetland.

3. Provide a water quality control facility consisting of one or more **treatment BMPs** to treat all urban runoff entering the wetland. Refer to Chapter 4 of Volume 1 or Chapter 2 of Volume 5 of the Stormwater Management Manual for Western Washington to determine treatment requirements. Then refer to the corresponding BMP menu for that requirement in Chapter 3 of Volume V. From the menu select a BMP that fits with the project site.

   - If the wetland is a **priority peat wetland** (bogs and fens as more specifically defined by the Washington Department of Ecology), the facility should include a BMP with the most advanced ability to control nutrients (e. g., an infiltration device, a wet pond or constructed wetland with residence time in the pooled storage of at least two weeks). [Note: Infiltration is prone to failure in many Puget Sound Basin locations with glacial till soils and generally requires **pretreatment** to avoid clogging. In other situations infiltrating urban runoff may contaminate groundwater. Consult the stormwater management manual adopted by the jurisdiction and carefully analyze infiltration according to its prescriptions.] Refer to Appendix 4 for a comparison of water chemistry conditions in priority peat versus more typical wetlands.

     Refer to the stormwater management manual to select and design the facility. Generally, the facility should be located outside and upstream of the wetland and its buffer.

4. Design and perform a water quality monitoring program for priority peat wetlands and for other wetlands subject to relatively high water pollutant loadings. The research results (Horner 1989) identified such wetlands as having contributing catchments exhibiting either of the following characteristics:

   - More than 20 percent of the catchment area is committed to commercial, industrial, and/or multiple family residential land uses; or
   - The combination of all urban land uses (including single family residential) exceeds 30 percent of the catchment area.

   A recommended monitoring program, consistent with monitoring during the research program, is:

   - Perform pre-development **baseline sampling** by collecting water quality grab samples in an open water pool of the wetland for at least one year, allocated through the year as follows: November 1-March 31--4 samples, April 1-May 31--1 sample, June 1-August 31--2 samples, and September 1-October 31--1 sample (if the wetland is dry during any period, reallocate the sample(s) scheduled then to another time). Analyze samples for pH; dissolved oxygen (DO); conductivity (Cond); total suspended solids (TSS); total phosphorus (TP); nitrate + nitrite-nitrogen (N); fecal coliforms (FC); and total copper (Cu), lead (Pb), and zinc (Zn). Find the median and range of each water quality variable.
   - Considering the baseline results, set water quality goals to be maintained in the post-development period. Example goals are: (1) pH--no more than “x” percent (e. g., 10%) increase (relative to baseline) in annual median and maximum or decrease in annual minimum; (2) DO--no more than “x” percent decrease in annual median and minimum concentrations; (3) other variables --no more than “x” percent increase in annual median and maximum concentrations; (4) no increase in violations of the Washington Administrative Code (WAC) water quality criteria.
   - Repeat the sampling on the same schedule for at least one year after all development is complete. Compare the results to the set goals.

     If the water quality goals are not met, consider additional applications of the source and treatment controls described in steps 2 and 3. Continue monitoring until the goals are met at least two years in succession.

     NOTE: Wetland water quality was found to be highly variable during the research, a fact that should be reflected in goals. Using the maximum (or minimum), as well as a measure of central tendency like the median, and allowing some change from pre-development levels are ways of incorporating an allowance for variability. Table I-E-2 presents data from the wetlands studied during the research program to give an approximate idea of magnitudes and degree of variability to be expected. Non-urbanized watersheds (N) are those that have both < 15% urbanization and < 6% impervious cover. Highly urbanized watersheds (H) are those that have both lost all forest cover and have > 20% impervious cover. Moderately urbanized watersheds (M) are those that fit neither the N nor H category.

Table I-E-2. Water Quality Ranges Found in Study Wetlands

	N			M			H		
Metric	**Median**	**Mean**	**Std.Dev./n[a]**	**Median**	**Mean**	**Std.Dev./n[a]**	**Median**	**Mean**	**Dev./n[a]**
pH[b]	6.4	6.4	0.5/162	6.7	6.5	0.8/132	6.9	6.7	0.6/52
DO (mg/L)	5.9	5.7	2.6/205	5.1	5.53.6/173	6.3	5.4	2.9/67	
Cond. (µS/cm)	46	73	64/190	160	142	73/161	132	151	86/61
TSS (µg/L)	2.0	4.6	8.5/204	2.8	9.2	22/175	4.0	9.2	15/66
TP (µg/L)	29	52	87/206	70	93	92/177	69	110	234/67
N (µg/L)	112	368	485/206	304	598	847/177	376	395	239/67
FC (no./100mL)	9.0	271	1000/206	46	2665	27342/173	61	969	4753/66
Cu (µg/L)	<5.0	<3.3	>2.7/93	<5.0	<3.7	>1.9/78	<5.0	<4.1	<2.5/29
Pb (µg/L)	1.0	<2.7	>2.8/136	3.0	<3.4	>2.7/122	5.0	<4.5	>4.0/44
Zn (µg/L)	5.0	8.4	8.3/136	8.0	9.8	7.2/122	20	20	17/44

[a] Std. Dev.--standard deviation; n--number of observations.
[b] Values do not apply to priority peat wetlands. The program did not specifically study these wetlands but measured pH in three wetlands with "bog-like" characteristics. The minimum value measured in these wetlands was 4.5, and the lowest median was 4.8; but pH can be approximately 1 unit lower in wetlands of this type.

Guide Sheet 2D: Guidelines for the Protection of Specific Biological Communities

1. For wetlands inhabited by breeding native amphibians:
   - Refer to step 4 of Guide Sheet 2B for hydroperiod limit.
   - Avoid decreasing the sizes of the open water and aquatic bed zones.
   - Avoid increasing the channelization of flow. Do not form channels where none exist, and take care that inflows to the wetland do not become more concentrated and do not enter at higher velocities than accustomed. If necessary, concentrated flows can be uniformly distributed with a flow-spreading device such as a shallow weir, stilling basin, or perforated pipe. Velocity dissipation can be accomplished with a stilling basin or rip-rap pad.
   - Limit the post-development flow velocity to < 5 cm/s (0.16 ft/second) in any location that had a velocity in the range 0-5 cm/s in the pre-development condition.
   - Avoid increasing the gradient of wetland side slopes.
2. For wetlands inhabited by forest bird species:
   - Retain areas of coniferous forest in and around the wetland as habitat for forest species.
   - Retain shrub or woody debris as nesting sites for ground-nesting birds and downed logs and stumps for winter wren habitat.
   - Retain snags as habitat for cavity-nesting species, such as woodpeckers.

- Retain shrubs in and around the wetland for protective cover. If cover is insufficient to protect against domestic pet predation, consider planting native bushes such as rose species in the buffer.

3. For wetlands inhabited by **wetland obligate** bird species:
   - Retain **forested zones**, sedge and rush meadows, and deep open water zones, both without vegetation and with submerged and floating plants.
   - Retain shrubs in and around the wetland for protective cover. If cover is insufficient to protect against domestic pet predation, consider planting native bushes such as rose species in the buffer.
   - Avoid introducing **invasive weedy plant species**, such as purple loosestrife and reed canary grass.
   - Retain the buffer zone. If it has lost width or forest cover, consider re-establishing forested buffer area at least 30 meters (100 ft) wide.
   - If human entry is desired, establish paths that permit people to observe the wetland with minimum disturbance to the birds.
4. For wetlands inhabited by fish:
   - Protect fish habitats by avoiding water velocities above tolerated levels (selected with the aid of a qualified fishery biologist to protect fish in each life stage when they are present), siltation of spawning beds, etc. Habitat requirements vary substantially among fish species. If the wetland is associated with a larger water body, contact the Department of Fisheries and Wildlife to determine the species of concern and the acceptable ranges of habitat variables.
   - If stranding of protected commercial or sport fish could result from a structural or hydrologic modification for runoff quantity or quality control, develop a strategy to avoid stranding that minimizes disturbance in the wetland (e. g., by making provisions for fish return to the stream as the wetland drains, or avoiding use of the facility for quantity or quality control during fish presence).

Wetlands Guidance Appendix 1: Information Needed to Apply Guidelines

The following information listed for each guide sheet is most essential for applying the Wetlands and Stormwater Management Guidelines. As a start, obtain the relevant soil survey; the National Wetland Inventory, topographic and land use maps, and the results of any local wetland inventory.

Guide Sheet 1

1. Boundary and area of the contributing watershed of the wetland or other landscape unit
2. A complete definition of goals for the wetland and landscape unit subject to planning and management
3. Existing management and monitoring plans
4. Existing and projected land use in the landscape unit in the categories commercial, industrial, multi-family residential, single-family residential, agricultural, various categories of undeveloped, and areas subject to active logging or construction (expressed as percentages of the total watershed area)
5. Drainage network throughout the landscape unit
6. Soil conditions, including soil types, infiltration rates, and positions of seasonal water table (seasonally) and restrictive layers
7. Groundwater recharge and discharge points
8. Wetland category (I - IV in draft Puget Sound Water Quality Authority wetland protection guidelines); designation as rare or irreplaceable. Refer to the Washington Natural Heritage Program database. If the needed information is not available, a biological assessment will be necessary.
9. Watershed hydrologic assessment
10. Watershed water quality assessment
11. Wetland type and zones present, with special note of estuarine, priority peat system, forested, sensitive scrub-shrub zone, sensitive emergent zone and other sensitive or critical areas designated by state or local government (with dominant plant species)
12. Rare, threatened, or endangered species inhabiting the wetland
13. History of wetland changes
14. Relationship of wetland to other water bodies in the landscape unit and the drainage network
15. Flow pattern through the wetland
16. Fish and wildlife inhabiting the wetland
17. Relationship of wetland to other wildlife habitats in the landscape unit and the corridors between them

Guide Sheet 2

1. Existing and potential stormwater pollution sources
2. Existing and projected landscape unit land use (see number 4 under Guide Sheet 1)
3. Existing and projected wetland hydroperiod characteristics
4. Wetland bathymetry
5. Inlet and outlet locations and hydraulics
6. Landscape unit soils, geologic and hydrogeologic conditions
7. Wetland type and zones present (see number 11 under Guide Sheet 1)
8. Presence of breeding populations of native amphibian species
9. Presence of forest and wetland obligate bird species
10. Presence of fish species

Wetlands Guidance Appendix 2: Definitions

Baseline sampling	Sampling performed to define an existing state before any modification occurs that could change the state.
Bioengineering	Restoration or reinforcement of slopes and stream banks with living plant materials.
Buffer	The area that surrounds a wetland and that reduces adverse impacts to it from adjacent development.
Constructed wetland	A wetland intentionally created from a non-wetland site for the sole purpose of wastewater or stormwater treatment. These wetlands are not normally considered Waters of the United States or Waters of the State.
Degraded (disturbed) wetland (community)	A wetland (community) in which the vegetation, soils, and/or hydrology have been adversely altered, resulting in lost or reduced functions and values; generally, implies topographic isolation; hydrologic alterations such as hydroperiod alteration (increased or decreased quantity of water), diking, channelization, and/or outlet modification; soils alterations such as presence of fill, soil removal, and/or compaction; accumulation of toxicants in the biotic or abiotic components of the wetland; and/or low plant species richness with dominance by invasive weedy species
Enhancement	Actions performed to improve the condition of an existing degraded wetland, so that functions it provides are of a higher quality.
Estuarine wetland	Generally, an eelgrass bed; salt marsh; or rocky, sandflat, or mudflat intertidal area where fresh and salt water mix. (Specifically, a tidal wetland with salinity greater than 0.5 parts per thousand, usually semi-enclosed by land but with partly obstructed or sporadic access to the open ocean).
Forested communities (wetlands)	In general terms, communities (wetlands) characterized by woody vegetation that is greater than or equal to 6 meters in height; in these guidelines the term applies to such communities (wetlands) that represent a significant amount of tree cover consisting of species that offer wildlife habitat and other values and advance the performance of wetland functions overall.

Functions	The ecological (physical, chemical, and biological) processes or attributes of a wetland without regard for their importance to society (see also Values). Wetland functions include food chain support, provision of ecosystem diversity and fish and wildlife habitat, flood flow alteration, groundwater recharge and discharge, water quality improvement, and soil stabilization.
Hydrodynamics	The science involving the energy and forces acting on water and its resulting motion.
Hydroperiod	The seasonal occurrence of flooding and/or soil saturation; encompasses the depth, frequency, duration, and seasonal pattern of inundation.
Invasive weedy plant species	Opportunistic species of inferior biological value that tend to out-compete more desirable forms and become dominant; applied to non-native species in these guidelines.
Landscape unit	An area of land that has a specified boundary and is the locus of interrelated physical, chemical, and biological processes.
Modification, Modified (wetland)	A wetland whose physical, hydrological, or water quality characteristics have been purposefully altered for a management purpose, such as by dredging, filling, forebay construction, and inlet or outlet control.
On-site	An action (here, for stormwater management purposes) taken within the property boundaries of the site to which the action applies.
Polishing	Advanced treatment of a waste stream that has already received one or more stages of treatment by other means.
Pre-development, post-development	Respectively, the situation before and after a specific stormwater management project (e. g., raising the outlet, building an outlet control structure) will be placed in the wetland or a land use change occurs in the landscape unit that will potentially affect the wetland.
Pre-treatment	An action taken to remove pollutants from runoff before it is discharged into another system for additional treatment.
Priority peat systems	Unique, irreplaceable fens that can exhibit water pH in a wide range from highly acidic to alkaline, including fens typified by *Sphagnum* species, *Rhododendron groenlandicum* (Labrador tea), *Drosera rotundifolia* (sundew), and *Vaccinium oxycoccos* (bog cranberry); marl fens; estuarine peat deposits; and other moss peat systems with relatively diverse, undisturbed flora and fauna.

	Bog is the common name for peat systems having the *Sphagnum* association described, but this term applies strictly only to systems that receive water income from precipitation exclusively.
Rare, threatened, or endangered species	Plant or animal species that are regional relatively uncommon, are nearing endangered status, or whose existence is in immediate jeopardy and is usually restricted to highly specific habitats. Threatened and endangered species are officially listed by federal and state authorities, whereas rare species are unofficial species of concern that fit the above definitions.
Redevelopment	Conversion of an existing development to another land use, or addition of a material improvement to an existing development.
Regional	An action (here, for stormwater management purposes) that involves more than one discrete property.
Restoration	Actions performed to reestablish wetland functional characteristics and processes that have been lost by alterations, activities, or catastrophic events in an area that no longer meets the definition of a wetland.
Source control best management practices (BMPs)	Actions that are taken to prevent the development of a problem (e. g., increase in runoff quantity, release of pollutants) at the point of origin.
Stage excursion	A post-development departure, either higher or lower, from the water depth existing under a given set of conditions in the pre-development state.
Structure	The components of an ecosystem, both the abiotic (physical and chemical) and biotic (living).
Treatment best management practices (BMPs)	Actions that remove pollutants from runoff through one or more physical, chemical, biological mechanisms.
Unusual biological community types	Assemblages of interacting organisms that are relatively uncommon regionally.
Values	Wetland processes or attributes that are valuable or beneficial to society (also see Functions). Wetland values include support of commercial and sport fish and wildlife species, protection of life and property from flooding, recreation, education, and aesthetic enhancement of human communities.

Vernal wetland A wetland that has water above the soil surface for a period of time during and/or after the wettest season but always dries to or below the soil surface in warmer, drier weather.

Wetland obligate A biological organism that absolutely requires a wetland habitat for at least some stage of its life cycle.

Wetlands Those areas that are inundated or saturated by surface or ground water at a frequency and duration sufficient to support, and that under normal circumstances do support, a prevalence of vegetation typically adapted for life in saturated soil conditions. Wetlands generally include swamps, marshes, bogs, and similar areas. Wetlands do not include those artificial wetlands intentionally created from non-wetland sites, including, but not limited to, irrigation and drainage ditches, grass-lined swales, canals, detention facilities, wastewater treatment facilities, farm ponds, and landscape amenities, or those wetlands created after July 1, 1990, that were unintentionally created as a result of the construction of a road, street, or highway. Wetlands may include those artificial wetlands intentionally created from non-wetland areas to mitigate the conversion of wetlands. (Waterbodies not included in the definition of wetlands as well as those mentioned in the definition are still waters of the state.)

Wetlands Guidance Appendix 3: Native and Recommended Noninvasive Plant Species for Wetlands in the Puget Sound Basin

CAUTION: Extracting plants from an existing wetland donor site can cause a significant negative effect on that site. It is recommended that plants be obtained from native plant nursery stocks whenever possible. Collections from existing wetlands should be limited in scale and undertaken with care to avoid disturbing the wetland outside of the actual point of collection. Plant selection is a complex task, involving matching plant requirements with environmental conditions. It should be performed by a qualified wetlands botanist. Refer to Restoring Wetlands in Washington by the Washington Department of Ecology for more information.

The following plants are preferred in Puget Sound Basin freshwater wetlands:

Open water zone

Potamogeton species (pondweeds)
Nymphaea odorata (pond lily)
Brasenia schreberi (watershield)
Nuphar luteum (yellow pond lily)
Polygonum hydropiper (smartweed)
Alisma plantago-*aquatica* (broadleaf water plantain)
Ludwigia palustris (water purslane)
Menyanthes trifoliata (bogbean)
Utricularia minor, U. vulgaris (bladderwort)

Emergent zone

Carex obnupta, C. utriculata, C. arcta, C. stipata, C. vesicaria C. aquatilis, C. comosa, C. lenticularis (sedge)
Scirpus atricinctus (woolly bulrush)
Scirpus microcarpus (small-fruited bulrush)
Eleocharis palustris, E. ovata (spike rush)
Epilobium watsonii (Watson's willow herb)
Typha latifolia (common cattail) (Note: This native plant can be aggressive but has been found to offer certain wildlife habitat and water quality improvement benefits; use with care.)
Veronica americana, V. scutellata (American brookline, marsh speedwell)
Mentha arvensis (field mint)
Lycopus americanus, L. uniflora (bugleweed or horehound)
Angelica species (angelica)
Oenanthe sarmentosa (water parsley)
Heracleum lanatum (cow parsnip)
Glyceria grandis, G. elata (manna grass)
Juncus acuminatus (tapertip rush)
Juncus ensifolius (daggerleaf rush)
Juncus bufonius (toad rush)
Mimulus guttatus (common monkey flower)

Scrub-shrub zone	Salix lucida, S. rigida, S. sitchensis, S. scouleriana, S. pedicellaris (willow) Lysichiton americanus (skunk cabbage) Athyrium filix-femina (lady fern) *Cornus sericea* (redstem dogwood) Rubus spectabilis (salmonberry) Physocarpus capitatus (ninebark) *Ribes species* (gooseberry) Rhamnus purshiana (cascara) *Sambucus racemosa* (red elderberry) (occurs in wetland-upland transition) Loniceria involucrata (black twinberry) Oemleria cerasiformis (Indian plum) *Stachys cooleyae* (Stachy's horsemint) Prunus emarginata (bitter cherry)
Forested zone	Populus balsamifera, ssp. trichocarpa (black cottonwood) Fraxinus latifolia (Oregon ash) *Thuja plicata* (western red cedar) *Picea sitchensis* (Sitka spruce) *Alnus rubra* (red alder) *Tsuga heterophylla* (hemlock) *Acer circinatum* (vine maple) *Maianthemum dilatatum* (wild lily-of-the-valley) *Ivzula parviflora* (small-flower wood rush) *Torreyochloa pauciflora* (weak alkaligrass) *Ribes* species (currants)
Bog	*Sphagnum* species (sphagnum mosses) *Rhododendron groenlandicum* (Labrador tea) *Vaccinium oxycoccos* (bog cranberry) Kalmia microphylla, ssp. occidentalis (bog laurel)

The following exotic plants should not be introduced to existing, created, or constructed Puget Sound Basin freshwater wetlands:

Hedera helix (English ivy)
Phalaris arundinacea (reed canarygrass)
Lythrum salicaria (purple loosestrife)
Iris pseudacorus (yellow iris)
Ilex aquifolia (holly)
Impatiens glandulifera (policeman's helmet)
Lotus corniculatus (birdsfoot trefoil)
Lysimachia thyrsiflora (tufted loosestrife)
Myriophyllum species (water milfoil, parrot's feather)
Polygonum cuspidatum (Japanese knotweed)
Polygonum sachalinense (giant knotweed)
Rubus discolor (Himalayan blackberry)
Tanacetum vulgare (common tansy)

The following native plants should not be introduced to existing, created, or constructed Puget Sound Basin freshwater wetlands

Potentilla palustris (Pacific silverweed)
Solarum dulcimara (bittersweet nightshade)
Juncus effusus (soft rush)
Conium maculatum (poison hemlock)
Ranunculus repens (creeping buttercup)

Wetlands Guidance Appendix 4: Comparison of Water Chemistry Characteristics in *Sphagnum* Bog and Fen versus More Typical Wetlands

Water Quality Variable	Typical Wetlands	*Sphagnum* Bogs and Fens
PH	6 - 7	3.5 - 4.5
Dissolved oxygen (mg/L)	4 - 8	Shallow surface layer oxygenated, anoxic below
Cations	Divalent Ca, Mg common	Divalent Ca, Mg uncommon; Univalent Na, K predominant
Anions	HCO_3^-, CO_3^{2-} predominant	Cl^-, SO_4^{2-} predominant; almost no HCO_3^-, CO_3^{2-} (organic acids form buffering system)
Hardness	Moderate	Very low
Total phosphorus (µg/L)	50 - 500	5 - 50
Total Kjeldahl nitrogen (µg/L)	500 - 1000	~ 50

Wetland Protection Guidelines References

Chin, N. T. 1996. Watershed Urbanization Effects on Palustrine Wetlands: A Study of the Hydrologic, Vegetative, and Amphibian Community Response over Eight Years. M. S. C. E. Thesis, University of Washington, Seattle, WA.

Clymo, R. S. 1963. Ion exchange in *Sphagnum* and its relation to bog ecology. Annals of Botany 27 (106):310-324.

Cooke, S. S., Puget Sound Wetlands and Stormwater Management Research Program, unpublished Queen's Bog data.

Horner, R. R. 1989. Long-term effects of urban runoff on wetlands. Pp. in L. A. Roesner, B. Urbonas, and M. B. Sonnen (eds.), Design of Urban Runoff Controls, American Society of Civil Engineers, New York, NY.

Horner, R. R., J. J. Skupien, E. H. Livingston, and H. E. Shaver. 1994. Fundamentals of Urban Runoff Management: Technical and Institutional Issues. Terrene Institute, Washington, D. C.

Horner, R. R., S. S. Cooke, K. O. Richter, A. L. Azous, L. E. Reinelt, B. L. Taylor, K. A. Ludwa, and M. Valentine. 1996. Wetlands and Urbanization, Implications for the Future. Puget Sound Wetlands and Stormwater Management Research Program, Engineering Professional Programs, University of Washington, Seattle, WA.

Meyer, J., L. Vogel, and T. Duebendorfer, East Lake Sammamish wetland no. 21 unpublished data, submitted to L. Kulzer, King County Surface Water Management Division.

Moore, P. D. and D. J. Bellamy. 1974. Chapter 3, The Geochemical template. Peatlands. Elek Science, London, U. K.

Thurman, E. M. 1985. Organic Geochemistry of Natural Waters. Martinus Nijhoff/Dr W. Junk Publishers, Dordrecht, The Netherlands.

Vitt, D. H., D. G. Horton, N. G. Slack, and N. Malmer. 1990. *Sphagnum*-dominated peatlands of the hyperoceanic British Columbia coast: Patterns in surface water chemistry and vegetation. Canadian Journal of Forest Research 20:696-711.

Volume II – Stormwater Management for Construction Sites Table of Contents

Purpose of this Volume 113
Content and Organization of this Volume 113

Chapter 1 The 12 Elements of Construction Stormwater Pollution Prevention 114

Chapter 2 Developing a Construction Stormwater Pollution Prevention Plan (SWPPP) 123

2.1 General Requirements and Guidelines 123
2.1.1 BMP Standards and Specifications 123
2.1.2 General Principles 124
2.2 Step-by-Step Procedure 124
2.2.1 Step 1 – Data Collection 124
2.2.2 Step 2 – Data Analysis 125
2.2.3 Step 3 – Construction SWPPP Development and Analysis 127
2.2.3.1 Construction SWPPP Narrative 127
2.2.3.2 Erosion and Sediment Control Drawings 128
2.3 Construction SWPPP Checklists 128

Chapter 3 Standards and Specifications for Best Management Practices (BMPs) 134

3.1 Source Control BMPs 135
3.1.1 BMP C101: Preserving Natural Vegetation 135
3.1.1.1 Purpose 135
3.1.1.2 Conditions of Use 135
3.1.1.3 Design and Installation Specifications 135
3.1.1.4 Maintenance Standards 137
3.1.2 BMP C102: Buffer Zone 138
3.1.2.1 Purpose 138
3.1.2.2 Conditions of Use 138
3.1.2.3 Design and Installation Specifications 138
3.1.2.4 Maintenance Standards 138
3.1.3 BMP C103: High Visibility Plastic or Metal Fence 139
3.1.3.1 Purpose 139
3.1.3.2 Conditions of Use 139
3.1.3.3 Design and Installation Specifications 139
3.1.3.4 Maintenance Standards 139

3.1.4 BMP C104: Stake and Wire Fence 140
3.1.4.1 Purpose 140
3.1.4.2 Conditions of Use 140
3.1.4.3 Design and Installation Specifications 140
3.1.4.4 Maintenance Standards 140
3.1.5 BMP C105: Stabilized Construction Entrance 141
3.1.5.1 Purpose 141
3.1.5.2 Conditions of Use 141
3.1.5.3 Design and Installation Specifications 141
3.1.5.4 Maintenance Standards 141
3.1.6 BMP C106: Wheel Wash 144
3.1.6.1 Purpose 144
3.1.6.2 Conditions of Use 144
3.1.6.3 Design and Installation Specifications 144
3.1.6.4 Maintenance Standards 144
3.1.7 BMP C107: Construction Road/Parking Area Stabilization 146
3.1.7.1 Purpose 146
3.1.7.2 Conditions of Use 146
3.1.7.3 Design and Installation Specifications 146
3.1.7.4 Maintenance Standards 147
3.1.8 BMP C120: Temporary and Permanent Seeding 148
3.1.8.1 Purpose 148
3.1.8.2 Conditions of Use 148
3.1.8.3 Design and Installation Specifications 148
3.1.8.4 Maintenance Standards 151
3.1.9 BMP C121: Mulching 154
3.1.9.1 Purpose 154
3.1.9.2 Conditions of Use 154
3.1.9.3 Design and Installation Specifications 154
3.1.9.4 Maintenance Standards 154
3.1.10 BMP C122: Nets and Blankets 156
3.1.10.1 Purpose 156
3.1.10.2 Conditions of Use 156
3.1.10.3 Design and Installation Specifications 157
3.1.10.4 Maintenance Standards 158
3.1.11 BMP C123: Plastic Covering 161
3.1.11.1 Purpose 161
3.1.11.2 Conditions of Use 161
3.1.11.3 Design and Installation Specifications 161
3.1.11.4 Maintenance Standards 162
3.1.12 BMP C124: Sodding 164
3.1.12.1 Purpose 164
3.1.12.2 Conditions of Use 164
3.1.12.3 Design and Installation Specifications 164

3.1.12.4 Maintenance Standards 164
3.1.13 BMP C125: Compost 165
3.1.13.1 Purpose 165
3.1.13.2 Conditions of Use 165
3.1.13.3 Design and Installation Specifications 165
3.1.13.4 Maintenance Standards 166
3.1.14 BMP C126: Topsoiling 167
3.1.14.1 Purpose 167
3.1.14.2 Conditions of Use 167
3.1.14.3 Design and Installation Specifications 167
3.1.14.4 Maintenance Standards 169
3.1.15 BMP C127: Polyacrylamide for Soil Erosion Protection 170
3.1.15.1 Purpose 170
3.1.15.2 Conditions of Use 170
3.1.15.3 Design and Installation Specifications 170
3.1.15.4 Maintenance Standards 172
3.1.16 BMP C130: Surface Roughening 173
3.1.16.1 Purpose 173
3.1.16.2 Conditions for Use 173
3.1.16.3 Design and Installation Specifications 173
3.1.16.4 Maintenance Standards 173
3.1.17 BMP C131: Gradient Terraces 175
3.1.17.1 Purpose 175
3.1.17.2 Conditions of Use 175
3.1.17.3 Design and Installation Specifications 175
3.1.17.4 Maintenance Standards 176
3.1.18 BMP C140: Dust Control 177
3.1.18.1 Purpose 177
3.1.18.2 Conditions of Use 177
3.1.18.3 Design and Installation Specifications 177
3.1.18.4 Maintenance Standards 178
3.1.19 BMP C150: Materials On Hand 179
3.1.19.1 Purpose 179
3.1.19.2 Conditions of Use 179
3.1.19.3 Design and Installation Specifications 179
3.1.19.4 Maintenance Standards 179
3.1.20 BMP C151: Concrete Handling 180
3.1.20.1 Purpose 180
3.1.20.2 Conditions of Use 180
3.1.20.3 Design and Installation Specifications 180
3.1.20.4 Maintenance Standards 180
3.1.21 BMP C152: Sawcutting and Surfacing Pollution Prevention 181
3.1.21.1 Purpose 181
3.1.21.2 Conditions of Use 181

3.1.21.3 Design and Installation Specifications 181
3.1.21.4 Maintenance Standards 181
3.1.22 BMP C153: Material Delivery, Storage and Containment 182
3.1.22.1 Purpose 182
3.1.22.2 Conditions of Use 182
3.1.22.3 Design and Installation Specifications 182
3.1.22.4 Material Storage Areas and Secondary Containment Practices: 183
3.1.23 BMP C154: Concrete Washout Area 184
3.1.23.1 Purpose 184
3.1.23.2 Conditions of Use 184
3.1.23.3 Implementation 184
3.1.23.4 Education 185
3.1.23.5 Contracts 185
3.1.23.6 Location and Placement Considerations: 185
3.1.23.7 Onsite Temporary Concrete Washout Facility, Transit Truck Washout Procedures: 185
3.1.23.8 Inspection and Maintenance 186
3.1.23.9 Removal of Temporary Concrete Washout Facilities 187
3.1.24 BMP C160: Certified Erosion and Sediment Control Lead 190
3.1.24.1 Purpose 190
3.1.24.2 Conditions of Use 190
3.1.24.3 Specifications 190
3.1.25 BMP C161: Payment of Erosion Control Work 192
3.1.25.1 Purpose 192
3.1.25.2 Conditions of Use 192
3.1.26 BMP C162: Scheduling 193
3.1.26.1 Purpose 193
3.1.26.2 Conditions of Use 193
3.1.26.3 Design Considerations 193
3.1.27 BMP C180: Small Project Construction Stormwater Pollution Prevention 194
3.1.27.1 Purpose 194
3.1.27.2 Conditions of Use 194
3.1.27.3 Design and Installation Specifications 194
3.2 Runoff, Conveyance and Treatment BMPs 196
3.2.1 BMP C200: Interceptor Dike and Swale 196
3.2.1.1 Purpose 196
3.2.1.2 Conditions of Use 196
3.2.1.3 Design and Installation Specifications 196
3.2.2 BMP C201: Grass-Lined Channels 199
3.2.2.1 Purpose 199
3.2.2.2 Conditions of Use 199
3.2.2.3 Design and Installation Specifications 199
3.2.2.4 Maintenance Standards 200
3.2.3 BMP C202: Channel Lining 203

3.2.3.1 Purpose 203
3.2.3.2 Conditions of Use 203
3.2.3.3 Design and Installation Specifications 203
3.2.4 BMP C203: Water Bars 205
3.2.4.1 Purpose 205
3.2.4.2 Conditions of Use 205
3.2.4.3 Design and Installation Specifications 205
3.2.4.4 Maintenance Standards 206
3.2.5 BMP C204: Pipe Slope Drains 207
3.2.5.1 Purpose 207
3.2.5.2 Conditions of Use 207
3.2.5.3 Design and Installation Specifications 207
3.2.5.4 Maintenance Standards 208
3.2.6 BMP C205: Subsurface Drains 210
3.2.6.1 Purpose 210
3.2.6.2 Conditions of Use 210
3.2.6.3 Design and Installation Specifications 210
3.2.6.4 Maintenance Standards 212
3.2.7 BMP C206: Level Spreader 213
3.2.7.1 Purpose 213
3.2.7.2 Conditions of Use 213
3.2.7.3 Design and Installation Specifications 213
3.2.7.4 Maintenance Standards 214
3.2.8 BMP C207: Check Dams 215
3.2.8.1 Purpose 215
3.2.8.2 Conditions of Use 215
3.2.8.3 Design and Installation Specifications 215
3.2.8.4 Maintenance Standards 216
3.2.9 BMP C208: Triangular Silt Dike (Geotextile-Encased Check Dam) 218
3.2.9.1 Purpose 218
3.2.9.2 Conditions of Use 218
3.2.9.3 Design and Installation Specifications 218
3.2.9.4 Maintenance Standards 219
3.2.10 BMP C209: Outlet Protection 222
3.2.10.1 Purpose 222
3.2.10.2 Conditions of Use 222
3.2.10.3 Design and Installation Specifications 222
3.2.10.4 Maintenance Standards 223
3.2.11 BMP C220: Storm Drain Inlet Protection 224
3.2.11.1 Purpose 224
3.2.11.2 Conditions of Use 224
3.2.11.3 Design and Installation Specifications 225
3.2.11.4 Maintenance Standards 232
3.2.12 BMP C231: Brush Barrier 234

3.2.12.1 Purpose 234
3.2.12.2 Conditions of Use 234
3.2.12.3 Design and Installation Specifications 234
3.2.12.4 Maintenance Standards 234
3.2.13 BMP C232: Gravel Filter Berm 236
3.2.13.1 Purpose 236
3.2.13.2 Conditions of Use 236
3.2.13.3 Design and Installation Specifications 236
3.2.13.4 Maintenance Standards 236
3.2.14 BMP C233: Silt Fence 237
3.2.14.1 Purpose 237
3.2.14.2 Conditions of Use 237
3.2.14.3 Design and Installation Specifications 237
3.2.14.4 Maintenance Standards 240
3.2.15 BMP C234: Vegetated Strip 243
3.2.15.1 Purpose 243
3.2.15.2 Conditions of Use 243
3.2.15.3 Design and Installation Specifications 243
3.2.15.4 Maintenance Standards 243
3.2.16 BMP C235: Straw Wattles 244
3.2.16.1 Purpose 244
3.2.16.2 Conditions of Use 244
3.2.16.3 Design Criteria 244
3.2.16.4 Maintenance Standards 245
3.2.17 BMP C240: Sediment Trap 247
3.2.17.1 Purpose 247
3.2.17.2 Conditions of Use 247
3.2.17.3 Design and Installation Specifications 248
3.2.17.4 Maintenance Standards 250
3.2.18 BMP C241: Temporary Sediment Pond 251
3.2.18.1 Purpose 251
3.2.18.2 Conditions of Use 251
3.2.18.3 Design and Installation Specifications 251
3.2.18.4 Maintenance Standards 254
3.2.19 BMP C250: Construction Stormwater Chemical Treatment 258
3.2.19.1 Purpose 258
3.2.19.2 Conditions of Use 258
3.2.19.3 Design and Installation Specifications 258
3.2.19.4 Monitoring 263
3.2.20 BMP C251: Construction Stormwater Filtration 265
3.2.20.1 Purpose 265
3.2.20.2 Conditions of Use 265
3.2.20.3 Background Information 265
3.2.20.4 Design and Installation Specifications 265

3.2.20.5 Maintenance Standards 268
3.2.21 BMP C252: High pH Neutralization using CO_2 269
3.2.21.1 Description 269
3.2.21.2 Treatment Procedures 270
3.2.21.3 Safety and Materials Handling 271
3.2.21.4 Operator Records 271
3.2.22 BMP C253: pH Control for High pH Water 272
3.2.22.1 Description 272
3.2.22.2 Disposal Methods 272
Appendix A Standard Notes for Erosion Control Plans 273
Appendix B Background Information on Chemical Treatment 274
Appendix C Construction SWPPP Short Form 277

THIS PAGE INTENTIONALLY LEFT BLANK.

Volume

II

Volume II: Stormwater Management for Construction Sites

Purpose of this Volume

This volume of the Surface Water Management Manual discusses stormwater impacts and controls associated with construction activities. It addresses the planning, design, and implementation of stormwater management activities prior to and during the construction phase of projects.

The purpose of this volume is to provide guidance to prevent construction activities from adversely impacting downstream resources and on-site stormwater flows. Prevention of soil erosion, capture of water-borne sediment that has been unavoidably released from exposed soils, and protection of water quality from on-site pollutant sources are all readily achievable when the proper Best Management Practices (BMPs) are planned, installed, and properly maintained.

Content and Organization of this Volume

Volume II consists of three chapters that address the preparation and implementation of Construction Stormwater Pollution Prevention Plans (SWPPPs).

- Chapter 1 describes the 12 elements of stormwater pollution prevention.
- Chapter 2 presents a step-by-step method for developing a Construction SWPPP. It encourages examination of all possible conditions that could reasonably affect a particular project's stormwater control systems during the construction phase of the project.
- Chapter 3 contains BMPs for construction stormwater control and site management. The first section of Chapter 3 contains BMPs for Source Control. The second section addresses runoff, conveyance, and treatment BMPs. Various combinations of these BMPs should be used in the Construction SWPPP to satisfy each of the 12 elements applying to the project.

Chapter 1 The 12 Elements of Construction Stormwater Pollution Prevention

The 12 elements of construction stormwater pollution prevention cover the general water quality protection strategies of limiting site impacts, preventing erosion and sedimentation, and managing activities and sources. The applicant is required to address the following 12 elements in the construction stormwater pollution prevention plan (SWPPP). If an element is considered unnecessary, the Construction SWPPP must describe why that element is not needed.

The 12 elements are:

- Element 1 – Mark Clearing Limits
- Element 2 – Establish Construction Access
- Element 3 – Control Flow Rates
- Element 4 – Install Sediment Controls
- Element 5 – Stabilize Soils
- Element 6 – Protect Slopes
- Element 7 – Protect Drain Inlets
- Element 8 – Stabilize Channels and Outlets
- Element 9 – Control Pollutants
- Element 10 – Control Dewatering
- Element 11 – Maintain BMPs
- Element 12 – Manage the Project

Element #1: Mark Clearing Limits

- Before beginning any land disturbing activities, including clearing and grading, clearly mark all clearing limits, sensitive areas and their buffers, and trees that are to be preserved within the construction area to prevent damage and offsite impacts. Mark clearing limits both in the field and on the plans.
- Plastic, metal, or stake wire fence may be used to mark the clearing limits.
- Suggested BMPs:
  - BMP C101: Preserving Natural Vegetation
  - BMP C102: Buffer Zones
  - BMP C103: High Visibility Plastic or Metal Fence
  - BMP C104: Stake and Wire Fence

Element #2: Establish Construction Access

- Construction vehicle ingress and egress shall be limited to one route. Additional routes may be allowed for very large projects or linear projects.
- Access points shall be stabilized per BMP C105 – Stabilized Construction Entrance.
- Wheel wash or tire baths shall be located on site, if applicable. Wheel washes shall be required if other measures fail to control sediment from leaving the site.
- No tracking of sediment onto the roadway is allowed. If sediment is tracked onto the road, the road shall be thoroughly and immediately cleaned by shoveling or pickup sweeping. Transport sediment to a controlled sediment disposal area.
- Keep streets clean at ALL times. Clean tracked sediment immediately.
- Street washing of sediment to the storm drain system is not allowed.
- Suggested BMPs:
  - BMP C105: Stabilized Construction Entrance
  - BMP C106: Wheel Wash
  - BMP C107: Construction Road/Parking Area Stabilization

Element #3: Control Flow Rates

- Protect properties and waterways downstream of development sites from erosion due to increases in the volume, velocity, and peak flow rate of stormwater runoff from the project site.
- Conduct a downstream analysis if changes to offsite flows could impair or alter conveyance systems, stream banks, bed sediment, or aquatic habitat. See Volume I, Chapter 3 – Minimum Requirement #11 for offsite analysis guidelines.
- Construct stormwater detention facilities as one of the first steps in grading. Detention facilities shall be functional prior to construction of site improvements (e.g. impervious surfaces).
- During construction, the City may require non-standard temporary sediment control pond designs in order to provide additional flow control necessary to address local conditions or to protect properties and waterways downstream from erosion due to construction activities.
- Permanent infiltration ponds shall not be used for flow control during construction unless specifically allowed in writing by the City. If allowed, these facilities shall be protected from siltation during the construction phase as required by the City. A liner may be required. The ponds shall be excavated to final grade after the site is stabilized.
- Suggested BMPs:
  - BMP C240: Sediment Trap
  - BMP C241: Temporary Sediment Pond

Element #4: Install Sediment Controls

- Retain the duff layer, native topsoil, and natural vegetation in an undisturbed state to the maximum extent practicable. If it is not practicable to retain the duff layer in place, it should be stockpiled on-site, covered to prevent erosion, and replaced immediately upon completion of the ground disturbing activities.
- Prior to leaving a construction site or prior to discharge to an infiltration facility, surface water runoff from disturbed areas shall pass through a sediment pond or other appropriate sediment removal BMP.
- Construct sediment ponds, vegetated buffer strips, sediment barriers or filters, dikes, and other BMPs intended to trap sediment on site as one of the first steps in grading. These BMPs shall be functional before other land disturbing activities take place.
- Locate BMPs in a manner to avoid interference with the movement of juvenile salmonids attempting to enter off-channel areas or drainages.
- Seed and mulch earthen structures such as dams, dikes, and diversions according to the timing indicated in Element #5.
- Suggested BMPs:
    - BMP C231: Brush Barrier
    - BMP C232: Gravel Filter Berm
    - BMP C233: Silt Fence
    - BMP C234: Vegetated Strip
    - BMP C235: Straw Wattles
    - BMP C240: Sediment Trap
    - BMP C241: Temporary Sediment Pond
    - BMP C250: Construction Stormwater Chemical Treatment
    - BMP C251: Construction Stormwater Filtration
- Proprietary technologies exist that can be used for sediment control. Ecology to determine if the temporary sediment control device is equivalent to an existing BMP or requires Ecology approval via the Technology Assessment Protocol Ecology program.

Element #5: Stabilize Soils

- Stabilize exposed and unworked soils by application of effective BMPs that protect the soil from the erosive forces of raindrop impact, flowing water, and wind.
- From October 1 through April 30, no soils shall remain exposed and unworked for more than 2 days. From May 1 to September 30, no soils shall remain exposed and unworked for more than 7 days. This stabilization requirement applies to all soils on site, whether at final grade or not. (See City's Clearing and Grading Code ACC 15.74).

- Stabilize soils at the end of the shift, before a holiday or weekend, if needed, based on the weather forecast.
- Select appropriate soil stabilization measures for the time of year, site conditions, estimated duration of use, and the potential water quality impacts that stabilization agents may have on downstream waters or groundwater.
- Stabilize soil stockpiles from erosion, protect stockpiles with sediment trapping measures, and where possible, locate piles away from storm drain inlets, waterways, and drainage channels.
- Suggested BMPs:
  - BMP C120: Temporary and Permanent Seeding
  - BMP C121: Mulching
  - BMP C122: Nets and Blankets
  - BMP C123: Plastic Covering
  - BMP C124: Sodding
  - BMP C125: Compost
  - BMP C126: Topsoiling
  - BMP C127: Polyacrylamide for Soil Erosion Protection
  - BMP C130: Surface Roughening
  - BMP C131: Gradient Terraces
  - BMP C140: Dust Control
  - BMP C180: Small Project Construction Stormwater Pollution Prevention

Element #6: Protect Slopes

- Reduce slope runoff velocities by reducing continuous length of slope with terracing and diversions, reducing slope steepness, and/or roughing slope surface.
- Divert off-site stormwater (sometimes called run-on) away from slopes and disturbed areas with interceptor dikes and/or swales. Manage off-site stormwater separately from stormwater generated on the site.
- At the top of slopes, collect drainage in pipe slope drains or protected channels to prevent erosion. Size temporary pipe slope drains for the peak flow from a 10-year, 24-hour event. Alternatively, the 10-year and 25-year, 1-hour flow rates indicated by WWHM, increased by a factor of 1.6, may be used. Size permanent pipe slope drains for the 25-year, 24-hour event. Use the existing land cover condition for predicting flow rates from tributary areas outside the project limits for the hydrologic analysis. For tributary areas on the project site, use the temporary or permanent project land cover condition, whichever will produce the higher flows for the analysis. If using WWHM to predict flows, model bare soils and landscaped areas.

- Provide drainage to remove groundwater seepage from the slope surface of exposed soil areas.
- Place excavated material on the uphill side of trenches, consistent with safety and space considerations.
- Place check dams at regular intervals within channels that are cut down a slope.
- Stabilize soils on slopes, as specified in Element #5.
- Suggested BMPs:
  - BMP C120: Temporary and Permanent Seeding
  - BMP C130: Surface Roughening
  - BMP C131: Gradient Terraces
  - BMP C200: Interceptor Dike and Swale
  - BMP C201: Grass-Lined Channels
  - BMP C204: Pipe Slope Drains
  - BMP C205: Subsurface Drains
  - BMP C206: Level Spreader
  - BMP C207: Check Dams
  - BMP C208: Triangular Silt Dike (Geotextile-Encased Check Dam)

Element #7: Protect Drain Inlets

- Protect all storm drain inlets that are operable during construction so that stormwater runoff does not enter the conveyance system without first being filtered or treated to remove sediment.
- Keep all approach roads clean. Do not allow sediment to enter storm drains.
- Inspect inlets weekly at a minimum and after each storm events. Clean or remove and replace inlet protection devices when sediment has filled one-third of the available storage (unless a different standard is specified by the product manufacturer).
- Suggested BMPs:
  - BMP C220: Storm Drain Inlet Protection

Element #8: Stabilize Channels and Outlets

- Design, construct, and stabilize all temporary on-site conveyance channels to prevent erosion from the expected peak 10-minute velocity of a 10-year, 24-hour frequency storm for the developed condition. Alternatively, the 10-year, 1-hour flow rate indicated by an approved continuous runoff model, increased by a factor of 1.6, may be used. For tributary areas outside the project limits, use the existing land cover conditions for predicting flow rates from tributary areas outside the project

limits for the hydrologic analysis. For tributary areas on the project site, use the temporary or permanent project land cover condition, whichever will produce the highest flow rates, for the hydrologic analysis. If using WWHM, model bare soils as landscaped.

- Provide stabilization, including armoring material, adequate to prevent erosion of outlets, adjacent stream banks, slopes, and downstream reaches at the outlets of all conveyance systems.
- Suggested BMPs:
  - BMP C202: Channel Lining
  - BMP C209: Outlet Protection

Element #9: Control Pollutants

- All discharges to the City sewer system (storm or sanitary sewers) require City approval.
- Handle and dispose of all pollutants, including waste materials and demolition debris that occur on site during construction in a manner that does not cause contamination of stormwater. Woody debris may be chopped and spread on site.
- Provide cover, containment, and protection for all chemicals, liquid products, petroleum products, and other materials that have the potential to pose a threat to human health and the environment. Include secondary containment for on-site fueling tanks.
- Use spill prevention and control measures, such as drip pans, when conducting maintenance and repair of heavy equipment and vehicles involving oil changes, hydraulic system drain down, solvent and de-greasing cleaning operations, fuel tank drain down and removal, and other activities which may result in discharge or spillage of pollutants to the ground or into stormwater runoff. Clean contaminated surfaces immediately following any discharge or spill incident. Emergency repairs may be performed on-site using temporary plastic placed beneath and, if raining, over the vehicle.
- Discharge wheel wash or tire bath wastewater to a separate on-site treatment system or to the sanitary sewer.
- Only apply agricultural chemicals, including fertilizers and pesticides, when absolutely necessary and only in a manner and at application rates that will not result in loss of chemical to stormwater runoff. Follow manufacturers' recommendations for application rates and procedures.
- Use BMPs to prevent or treat contamination of stormwater runoff by pH modifying sources. These sources include, but are not limited to, bulk cement, cement kiln dust, fly ash, new concrete washing and curing waters, waste streams generated from concrete grinding and sawing, exposed aggregate processes, and concrete pumping and mixer washout waters. Construction site operators must adjust the pH of stormwater to prevent violations of water quality standards.

- Written approval from the Department of Ecology is required prior to using chemical treatment other than CO_2 or dry ice to adjust pH.
- Suggested BMPs:
  - BMP C151: Concrete Handling
  - BMP C152: Sawcutting and Surfacing Pollution Prevention
  - BMP C154: Concrete Washout Area
  - Source Control BMPs from Volume IV, as appropriate

Element #10: Control Dewatering

- All discharges to the City sewer system (storm or sanitary sewers) require City approval.
- Discharge foundation, vault, and trench dewatering water that has similar characteristics to site stormwater runoff into a controlled conveyance system prior to discharge to a sediment pond or sediment tank/vault. Stabilize channels as specified in Element #8.
- Clean, non-turbid dewatering water, such as well-point groundwater, can be discharged to systems tributary to state surface waters, as specified in Element #8, provided the dewatering flow does not cause erosion or flooding of receiving waters. These clean waters should not be routed through stormwater sediment ponds/tanks.
- Handle highly turbid or contaminated dewatering water from construction equipment operation, clamshell digging, concrete tremie pour, or work inside a cofferdam separately from stormwater at the site.
- Other disposal options, depending on site constraints, may include:
  - Infiltration
  - Transport off-site in vehicle, such as a vacuum flush truck, for legal disposal in a manner that does not pollute state waters
  - Ecology approved on-site chemical treatment or other suitable treatment technologies
  - Use of a sedimentation bag with outfall to a ditch or swale for small volumes of localized dewatering

Element #11: Maintain BMPs

- Maintain and repair as needed all temporary and permanent erosion and sediment control BMPs to assure continued performance of their intended function. Conduct maintenance and repair in accordance with BMP specifications.
- Remove temporary erosion and sediment control BMPs within 30 days after final site stabilization is achieved or after the temporary BMPs are no longer needed. Trapped sediment shall be removed or stabilized on site. Permanently stabilize disturbed soil resulting from removal of BMPs or vegetation.

Element #12: Manage the Project

- ***Phasing of Construction*** – Phase development projects in order to prevent soil erosion and the transport of sediment from the project site during construction, unless the project engineer can demonstrate that construction phasing is infeasible. Revegetation of exposed areas and maintenance of that vegetation shall be an integral part of the clearing activities for any phase.
- ***Seasonal Work Limitations*** – From October 1 through April 30, clearing, grading, and other soil disturbing activities shall only be permitted if shown to the satisfaction of the City that silt-laden runoff will be prevented from leaving the site through a combination of the following:
  - Site conditions including existing vegetative coverage, slope, soil type, and proximity to receiving waters;
  - Limitations on activities and the extent of disturbed areas; and
  - Proposed erosion and sediment control measures.

  Based on the information provided and local weather conditions, the City may expand or restrict the seasonal limitation on site disturbance. The following activities are exempt from the seasonal clearing and grading limitations:

  - Routine maintenance and necessary repair of erosion and sediment control BMPs
  - Routine maintenance of public facilities or existing utility structures that do not expose the soil or result in the removal of the vegetative cover to soil
  - Activities where there is one hundred percent infiltration of surface water runoff within the site in approved and installed erosion and sediment control facilities
- ***Coordination with Utilities and Other Contractors*** – Include surface water management requirements for the entire project, including the utilities and other contractors, in the Construction SWPPP.
- ***Inspection and Monitoring*** – Inspect, maintain, and repair all BMPs as needed to assure continued performance of their intended function. At a minimum, inspect all BMPs after each storm event. Site inspections shall be conducted by a person who is knowledgeable in the principles and practices of erosion and sediment control. The person must have the skills to 1) assess the site conditions and construction activities that could impact the quality of stormwater, and 2) assess the effectiveness of erosion and sediment control measures used to control the quality of stormwater discharges.

  For construction sites one acre or larger that discharge to surface waters of the state, a Certified Erosion and Sediment Control Lead (CESCL) shall be identified in the Construction SWPPP and shall be on-site or on-call at all times. Certification must be obtained through an Ecology-approved training program.

Sampling and analysis of the surface water discharges from a construction site may be necessary on a case-by-case basis to ensure compliance with standards. Ecology or the City will establish these monitoring and associated reporting requirements.

Whenever inspection and/or monitoring reveals that the BMPs identified in the Construction SWPPP are inadequate, due to the actual discharge of or potential to discharge a significant amount of any pollutant, the appropriate BMPs or design changes shall be implemented as soon as possible.

- ***Reporting*** – Report spillage or discharge of pollutants within 24-hours to the City of Auburn Spill Hotline 24-hour phone number at (253) 931-3048.
- ***Maintenance of the Construction SWPPP*** – Keep the Construction SWPPP on-site or within reasonable access to the site. Modify the SWPPP whenever there is a change in the design, construction, operation, or maintenance at the construction site that has, or could have, a significant effect on the discharge of pollutants to waters of the state.

  Modify the SWPPP if, during inspections or investigations conducted by the owner/operator, City staff, or by local or state officials, it is determined that the SWPPP is ineffective in eliminating or significantly minimizing pollutants in stormwater discharges from the site. Modify the SWPPP as necessary to include additional or modified BMPs designed to correct problems identified. Complete revisions to the SWPPP within seven (7) days following the inspection.

  The inspector may require that a modification to the SWPPP go through additional City review.

Chapter 2 Developing a Construction Stormwater Pollution Prevention Plan (SWPPP)

This chapter provides an overview of the important components of, and the process for, developing and implementing a Construction Stormwater Pollution Prevention Plan (SWPPP).

2.1 General Requirements and Guidelines

The Construction SWPPP is a document that describes the potential for pollution problems on a construction project. The Construction SWPPP explains and illustrates the measures to be taken on the construction site to control those problems.

All sites are required to comply with elements #1-#12.

Unless located in a critical area, a SWPPP is not required for projects that:

- Add or replace less than 2000 square feet of impervious surface, or,
- Disturb less than 7000 square feet of land

The Construction Stormwater Pollution Prevention Plan Short Form (Appendix C) may be used for projects that:

- Add or replace between 2000 square feet and 5000 square feet of impervious surface, or,
- Disturb between 7000 square feet and 1 acre

A complete SWPPP is required for projects that:

- Add or replace 5000 square feet or greater of impervious surface, or,
- Disturb greater than1 acre, or,
- Grade/Fill greater than 500 cubic yards of material.

The Construction SWPPP shall be prepared as a separate stand-alone document. Keep the Construction SWPPP on the construction site or within reasonable access to the site for construction and inspection personnel. As site work progresses, the plan must be modified to reflect changing site conditions, subject to the rules for plan modification by the City.

Include all 12 elements described in Volume II, Chapter 1 in the Construction SWPPP unless an element is determined not to be applicable to the project and the exemption is justified in the narrative.

2.1.1 BMP Standards and Specifications

Chapter 3 of this volume contains standards and specifications for the BMPs referred to in this chapter. Wherever any of these BMPs are to be employed on a site, clearly reference the specific title and number of the BMP in the narrative and mark it on the drawings.

Where appropriate BMPs do not exist, experimental practices may be considered or minor modifications to standard practices may be employed. Such practices must be approved by the City before implementation.

2.1.2 General Principles

The following general principles should be applied to the development of any Construction SWPPP.

- Retain the duff layer, native topsoil, and natural vegetation in an undisturbed state to the maximum extent practicable.
- Prevent pollutant release. Select source control BMPs as a first line of defense. Prevent erosion rather than treat turbid runoff.
- Select BMPs depending on site characteristics (topography, drainage, soil type, ground cover, and critical areas) and the construction plan.
- Divert runoff away from exposed areas wherever possible. Keep clean water clean.
- Limit the extent of clearing operations and phase construction operations.
- Before reseeding a disturbed soil area, amend all soils with compost wherever topsoil has been removed.
- Incorporate natural drainage features whenever possible, using adequate buffers and protecting areas where flow enters the drainage system.
- Minimize slope length and steepness.
- Reduce runoff velocities to prevent channel erosion.
- Prevent the tracking of sediment off-site.
- Select appropriate BMPs for the control of pollutants in addition to sediment.
- Be realistic about the limitations of BMPs specified and the operation and maintenance of those BMPs. Anticipate what may go wrong, how you can prevent it from happening, and what will need to be done to fix it.

2.2 Step-by-Step Procedure

There are three basic steps in producing a Construction SWPPP:

- Step 1 - Data Collection
- Step 2 - Data Analysis
- Step 3 - Construction SWPPP Development and Implementation

Steps 1 and 2, described in more detail below, are intended for projects that must complete a full SWPPP. Smaller projects below the thresholds indicated in Section 2.1 may prepare a short form Construction SWPPP, consisting of a checklist and a plan view (see Appendix C).

2.2.1 Step 1 – Data Collection

Evaluate existing site conditions and gather information that will help develop the most effective Construction SWPPP. The information gathered should be explained in the narrative and shown on the drawings. Appendix A provides standard notes required on the drawing.

- ***Topography* -** Prepare a topographic drawing of the site to show the existing contour elevations at intervals of 1 to 5 feet depending upon the slope of the terrain.
- ***Drainage* -** Locate and clearly mark existing drainage ditches, swales, and patterns on the drawing, including existing storm drain pipe systems. Mark location of site runon and runoff on drawing.
- ***Soils* -** Identify and label soil type(s) and erodibility (low, medium, high). A geotechnical investigation may be required since published soils information in the City is very limited. Regardless of the availability of published soils information, the project proponent is responsible for characterizing site soils for erosive potential.
- ***Ground Cover* -** Label existing vegetation on the drawing. Show such features as tree clusters, grassy areas, and unique or sensitive vegetation. Unique vegetation may include existing trees above a given diameter. The City of Auburn encourages tree preservation where possible. In addition, indicate existing denuded or exposed soil areas.
- ***Critical Areas* -** Delineate critical areas adjacent to or within the site on the drawing. Such features as steep slopes, streams, floodplains, lakes, wetlands, sole source aquifers, and geologic hazard areas, etc., should be shown. Delineate setbacks and buffer limits for these features on the drawings. Other related jurisdictional boundaries such as Shorelines Management and the Federal Emergency Management Agency (FEMA) base floodplain should also be shown on the drawings.
- ***Adjacent Areas* -** Identify existing buildings, roads, and facilities adjacent to or within the project site on the drawings. Identify existing and proposed utility locations, construction clearing limits, and erosion and sediment control BMPs on the drawings.
- ***Existing Encumbrances* -** Identify wells, existing and abandoned septic drain fields, utilities, easements, and site constraints.
- ***Precipitation Records* -** Determine the average monthly rainfall and rainfall intensity for the required design storm events.

2.2.2 Step 2 – Data Analysis

Consider the data collected in Step 1 to visualize potential problems and limitations of the site. Determine those areas that have critical erosion hazards. The following are some important factors to consider in data analysis:

- ***Topography* -** The primary topographic considerations are slope steepness and slope length. The longer and steeper the slope, the greater the erosion potential. Erosion potential should be determined by a qualified engineer, soil professional, or certified erosion control specialist. Measures to decrease erosion potential shall be considered.
- ***Drainage* -** Natural drainage patterns that consist of overland flow, swales, and depressions should be used to convey runoff through the site to avoid construction of an artificial drainage system. Man-made ditches and waterways will become part of the erosion problem if they are not properly stabilized. Care should be taken to

ensure that increased runoff from the site will not erode or flood the existing natural drainage system. Possible sites for temporary surface water retention and detention should be considered at this point.

- Direct construction site runoff away from saturated soil areas where groundwater may be encountered and critical areas where drainage will concentrate. Preserve natural drainage patterns on the site.
- ***Soils -*** Evaluate soil properties such as surface and subsurface runoff characteristics, depth to impermeable layer, depth to seasonal groundwater table, permeability, shrink-swell potential, texture, settleability, and erodibility. Develop the Construction SWPPP based on known soil characteristics. Infiltration sites should be properly protected from clay and silt which will reduce infiltration capacities.
- ***Ground Cover -*** Ground cover is the most important factor in terms of preventing erosion. Existing vegetation that can be saved will prevent erosion better than constructed BMPs. Trees and other vegetation protect the soil structure. Disturb as little of the site as required to construct proposed improvements. If the existing vegetation cannot be saved, consider such practices as phasing of construction, temporary seeding, and mulching. Phasing of construction involves stabilizing one part of the site before disturbing another. In this way, the entire site is not disturbed at once.
- ***Critical Areas -*** Critical areas may include flood hazard areas, mine hazard areas, slide hazard areas, sole source aquifers, wetlands, stream banks, fish-bearing streams, and other water bodies. Any critical areas within or adjacent to the development shall be a key consideration on land development decisions. Critical areas and their buffers shall be delineated on the drawings and clearly flagged in the field. Critical areas identified by the City of Auburn are available from the Planning, Building & Community Department. Orange plastic fencing may be more useful than flagging to assure that equipment operators stay out of critical areas. Only unavoidable work should take place within critical areas and their buffers. Such unavoidable work will require special BMPs, permit restrictions, and mitigation plans.
- ***Adjacent Areas -*** An analysis of adjacent properties should focus on areas upslope and down slope from the construction project. Water bodies that will receive direct runoff from the site are a major concern. Investigate and identify runon to the site. The types, values, and sensitivities of and risks to downstream resources, such as private property, stormwater facilities, public infrastructure, or aquatic systems, should be evaluated. Develop a plan to route runon around areas disturbed by construction. Erosion and sediment controls should be selected accordingly.
- ***Precipitation Records -*** Refer to Volume III to determine the required rainfall records and the method of analysis for design of BMPs.
- ***Timing of the Project -*** An important consideration in selecting BMPs is the timing and duration of the project. Projects that will proceed during the wet season and projects that will last through several seasons must take all necessary precautions to remain in compliance with the water quality standards.

2.2.3 Step 3 – Construction SWPPP Development and Analysis

The Construction SWPPP consists of two parts: a narrative and the drawings. This section describes the contents of the narrative and the drawings. The Department of Ecology has prepared a SWPPP template that offers a quick and convenient means for developing a SWPPP for development and redevelopment projects in the City of Auburn. This template can be found on Ecology's website at:

http://www.ecy.wa.gov/programs/wq/stormwater/construction/

NOTE: Ensure that BMP numbers and references match the City SWMM when using the Ecology template.

2.2.3.1 Construction SWPPP Narrative

The following topic headings shall be used, at a minimum, when preparing the Construction SWPPP narrative.

- **Project Description** – Describe the nature and purpose of the construction project. Include the total size of the area, any increase in existing impervious area; the total area expected to be disturbed by clearing, grading, excavation or other construction activities, including off-site borrow and fill areas; and the volumes of grading, cut and fill that are proposed.
- **Existing Site Conditions** – Describe the existing topography, vegetation, and drainage (including runon and runoff). Include a description of any structures or development on the parcel including the area of existing impervious surfaces.
- **Adjacent Areas** – Describe adjacent areas, including streams, lakes, wetlands, residential areas, and roads that might be affected by the construction project. Provide a description of the downstream drainage leading from the site to the receiving body of water.
- **Critical Areas** – Describe areas on or adjacent to the site that are classified as critical areas. Critical areas that receive runoff from the site shall be described up to ¼ mile away. The distance may be increased by the City if special downstream critical areas exist. Describe special requirements for working near or within these areas. Critical areas identified by the City of Auburn from the Planning, Building & Community Department. Critical areas not identified on the website still require consideration.
- **Soils** – Describe the soils on the site, giving such information as soil names, mapping unit, erodibility, settleability, permeability, depth, texture, and soil structure.
- **Potential Erosion Problem Areas** – Describe areas on the site that have potential erosion problems.
- **Construction Stormwater Pollution Prevention Elements** – Describe how the Construction SWPPP addresses each of the 12 required elements. Include the type and location of BMPs used to satisfy the required element. If an element is not applicable to a project, provide a written justification for why it is not necessary.

- **Construction Phasing** – Describe the intended sequence and timing of construction activities.
- **Construction Schedule** – Describe the construction schedule. If the schedule extends into the wet season, describe what activities will continue during the wet season and how the transport of sediment from the construction site to receiving waters will be prevented.
- **Financial/Ownership Responsibilities** – Describe ownership and obligations for the project. Include bond forms and other evidence of financial responsibility for environmental liabilities associated with construction.
- **Engineering Calculations** – Attach any calculations made for the design of BMPs such as sediment ponds, diversions, and waterways, as well as calculations for runoff and stormwater detention design (if applicable). Engineering calculations must bear the signature and stamp of an engineer licensed in the state of Washington. Provide references for all variables used and clearly state any assumptions.

2.2.3.2 Erosion and Sediment Control Drawings

See the City of Auburn Engineering Design Standard 3.04 for plan sheet requirements.

2.3 Construction SWPPP Checklists

The following checklists provide a tool to the applicant to determine if all the major items are included in the Construction SWPPP. The checklist will be used by reviewers to determine that SWPPPs meet all requirements and are complete. Applicants are encouraged to complete and submit this form with their application.

Construction Stormwater Pollution Prevention Plan Checklist

Project Name: _____

Address: _____

Parcel No.: _____ Section: _____ Township: _____ Range: _____

City Reference/Permit No.: _____

Responsible Parties: Owner:_____ Engineer:_____

Section I – Construction SWPPP Narrative

1. Project Description

☐ A. Total project area.
☐ B. Total proposed impervious area.
☐ C. Total proposed area to be disturbed, including off-site borrow and fill areas.
☐ D. Total volumes of proposed cut and fill.

2. Existing Site Conditions

☐ A. Description of the existing topography.
☐ B. Description of the existing vegetation.
☐ C. Description of the existing drainage.

3. Adjacent Areas

☐ A. Description of adjacent areas which may be affected by site disturbance

- ☐ 1. Streams
- ☐ 2. Lakes
- ☐ 3. Wetlands
- ☐ 4. Residential areas
- ☐ 5. Roads
- ☐ 6. Ditches, pipes, culverts
- ☐ 7. Other

☐ B. Description of the downstream drainage path leading from the site to the receiving body
of water (minimum distance of ¼ mile.)

4. Critical Areas

☐ A. Description of critical areas that are on or adjacent to the site.
☐ B. Description of special requirements for working in or near critical areas.

Construction Stormwater Pollution Prevention Plan Checklist

Project Name: _____

Address: _____ Parcel No: _____

City Reference/Permit No.: _____

5. Soils

☐ Description of on-site soils.
- ☐ 1. Soil name(s)
- ☐ 2. Soil mapping unit

The following information may be required:
- Erodibility
- Settleability
- Permeability
- Depth
- Texture
- Soil structure

6. Potential Erosion Problem Areas

☐ Description of potential erosion problems on site.

7. Construction Stormwater Pollution Prevention Elements

☐ A. Describe how each of the Construction Stormwater Pollution Prevention Elements has been addressed though the Construction SWPPP.
☐ B. Identify the type and location of BMPs used to satisfy the required element.
☐ C. Written justification identifying the reason an element is not applicable to the proposal.

12 Required Elements - Construction Stormwater Pollution Prevention Plan:

☐ 1. Mark Clearing Limits
☐ 2. Establish Construction Access
☐ 3. Control Flow Rates
☐ 4. Install Sediment Controls
☐ 5. Stabilize Soils
☐ 6. Protect Slopes
☐ 7. Protect Drain Inlets
☐ 8. Stabilize Channels and Outlets
☐ 9. Control Pollutants
☐ 10. Control Dewatering
☐ 11. Maintain BMPs
☐ 12. Manage the Project

Construction Stormwater Pollution Prevention Plan Checklist

Project Name: _____

Address: _____ Parcel No: _____

City Reference/Permit No.: _____

8. Construction Phasing

☐ A. Construction sequence
☐ B. Construction phasing (if proposed)

9. Construction Schedule

☐ A. Provide a proposed construction schedule.
☐ B. Wet Season Construction Activities
  ☐ 1. Proposed wet season construction activities.
  ☐ 2. Proposed wet season construction restraints for environmentally sensitive/critical areas.

10. Financial/Ownership Responsibilities

☐ A. Identify the property owner responsible for the initiation of bonds and/or other financial securities.
☐ B. Describe bonds and/or other evidence of financial responsibility for liability associated with erosion and sedimentation impacts.
☐ C. Maintenance bond.

11. Engineering Calculations

☐ Provide Design Calculations.
  ☐ 1. Sediment ponds/traps
  ☐ 2. Diversions
  ☐ 3. Waterways
  ☐ 4. Runoff/stormwater detention calculations

Construction Stormwater Pollution Prevention Plan Checklist

Project Name: _____

Address:_____ Parcel No.: _____

City Reference/Permit No.: _____

Responsible Parties: Owner:_____ Engineer:_____

Section II - Erosion and Sediment Control Drawings

1. General

☐ A. Vicinity map with roads and waters of the state within one mile of the site.
☐ B. Address, Parcel Number, and Street names labels
☐ C. Erosion and Sediment Control Notes

2. Site Plan

☐ A. Legal description of subject property.
☐ B. North Arrow
☐ C. Indicate boundaries of existing vegetation, e.g. tree lines, pasture areas, etc.
☐ D. Identify and label areas of potential erosion problems.
☐ E. Identify any on-site or adjacent surface waters, critical areas and associated buffers.
☐ F. Identify FEMA base flood boundaries and Shoreline Management boundaries (if applicable).
☐ G. Show existing and proposed contours.
☐ H. Indicate drainage basins and direction of flow for individual drainage areas.
☐ I. Label final grade contours and identify developed condition drainage basins.
☐ J. Delineate areas that are to be cleared and graded.
☐ K. Show all cut and fill slopes indicating top and bottom of slope catch lines.

3. Conveyance Systems

☐ A. Designate locations for swales, interceptor trenches, or ditches.
☐ B. Show all temporary and permanent drainage pipes, ditches, or cut-off trenches required for erosion and sediment control.
☐ C. Provide minimum slope and cover for all temporary pipes or call out pipe inverts.
☐ D. Show grades, dimensions, and direction of flow in all ditches, swales, culverts and pipes.
☐ E. Provide details for bypassing offsite runoff around disturbed areas.
☐ F. Indicate locations and outlets of any dewatering systems.

4. Location of Detention BMPs

☐ Identify location of detention BMPs.

Construction Stormwater Pollution Prevention Plan Checklist

Project Name: _____

Address:_____ Parcel No.: _____

City Reference/Permit No.: _____

5. Erosion and Sediment Control Facilities

☐ Show the locations of all ESC facilities with dimensions and details as appropriate.

6. Detailed Drawings

☐ Any best management practices used that are not referenced in the SWMM should be explained and illustrated with detailed drawings.

7. Other Pollutant BMPs

☐ Indicate on the site plan the location of BMPs to be used for the control of pollutants other than sediment, e.g. concrete wash water.

8. Monitoring Locations

☐ Indicate on the site plan the water quality sampling locations to be used for monitoring water quality on the construction site, if applicable.

☐ Describe inspection reporting responsibility, documentation, and filing.

Chapter 3 Standards and Specifications for Best Management Practices (BMPs)

BMPs are defined as schedules of activities, prohibitions of practices, maintenance procedures, and structural and/or managerial practices, that when used singly or in combination, prevent or reduce the release of pollutants to waters of Washington State. This chapter contains standards and specifications for temporary BMPs to be used as applicable during the construction phase of a project.

Section 3.1 contains the standards and specifications for Source Control BMPs specific to construction operations.

Section 3.2 contains the standards and specifications for Runoff Conveyance and Treatment BMPs.

The standards for each individual BMP are divided into four sections:

1. Purpose
2. Conditions of Use
3. Design and Installation Specifications
4. Maintenance Standards

Note that the “Conditions of Use” always refers to site conditions. As site conditions change, BMPs must be changed to remain in compliance.

Information on stream bank stabilization is available in the Integrated Streambank Protection Guidelines, Washington State Department of Fish and Wildlife, 2003.

3.1 Source Control BMPs

3.1.1 BMP C101: Preserving Natural Vegetation

3.1.1.1 Purpose

The purpose of preserving natural vegetation is to reduce erosion wherever practicable. Limiting site disturbance is the single most effective method for reducing erosion. For example, conifers can hold up to about 50 percent of all rain that falls during a storm. Up to 20-30 percent of this rain may never reach the ground but is taken up by the tree or evaporates. Another benefit is that the rain held in the tree can be released slowly to the ground after the storm.

3.1.1.2 Conditions of Use

Natural vegetation should be preserved on steep slopes, near perennial and intermittent watercourses or swales, in wooded areas, and any other location practicable.

3.1.1.3 Design and Installation Specifications

Natural vegetation can be preserved in natural clumps or as individual trees, shrubs and vines.

The preservation of individual plants is more difficult because heavy equipment is generally used to remove unwanted vegetation. The points to remember when attempting to save individual plants are:

- Is the plant worth saving? Consider the location, species, size, age, vigor, and the work involved. The City of Auburn encourages the preservation of natural vegetation and trees.
- Fence or clearly mark areas around trees that are to be saved. Keep ground disturbance away from the trees as far out as the dripline (at a minimum).

Plants need protection from three kinds of injuries:

- ***Construction Equipment*** - This injury can be above or below the ground level. Damage results from scarring, cutting of roots, and compaction of the soil. Placing a fenced buffer zone around plants to be saved prior to construction can prevent construction equipment injuries.
- ***Grade Changes*** - Changing the natural ground level will alter grades, which affects the plant's ability to obtain the necessary air, water, and minerals. Minor fills usually do not cause problems although sensitivity between species does vary and should be checked. Trees can tolerate fill of 6 inches or less. For shrubs and other plants, the fill should be less.

  When there are major changes in grade, it may become necessary to supply air to the roots of plants. This can be done by placing a layer of gravel and a tile system over the roots before the fill is made. A tile system protects a tree from a raised grade. The tile system should be laid out on the original grade leading from a dry well around the tree trunk. The system should then be covered with small stones to allow air to circulate over the root area.

Lowering the natural ground level can seriously damage trees and shrubs. The highest percentage of the plant roots are in the upper 12 inches of the soil and cuts of only 2-3 inches can cause serious injury. To protect the roots, it may be necessary to terrace the immediate area around the plants to be saved. If roots are exposed, construction of retaining walls may be needed to keep the soil in place. Plants can also be preserved by leaving them on an undisturbed, gently sloping mound. To increase the chances for survival, it is best to limit grade changes and other soil disturbances to areas outside the dripline of the plant.

- ***Excavations -*** Protect trees and other plants when excavating for drainfields, power, water, and sewer lines. Where possible, route the trenches around trees and large shrubs. When this is not possible, it is best to tunnel under them. This can be done with hand tools or power augers. If it is not possible to route the trench around plants to be saved, then the following methods should be observed:
  - Cut as few roots as possible. When you have to cut, cut clean. Paint cut root ends with a wood dressing like asphalt base paint.
  - Backfill the trench as soon as possible.
  - Tunnel beneath root systems as close to the center of the main trunk as possible to preserve most of the important feeder roots.

Some problems that can be encountered with a few specific trees are:

- Maple, Dogwood, Red alder, Western hemlock, Western red cedar, and Douglas fir do not readily adjust to changes in environment and special care should be taken to protect these trees.
- The windthrow hazard of Pacific silver fir and madrona is high, while that of Western hemlock is moderate. The danger of windthrow increases where dense stands have been thinned. Other species (unless they are in shallow, wet soils less than 20 inches deep) have a low windthrow hazard.
- Cottonwoods, maples, and willows have water-seeking roots. These species thrive in high moisture conditions that other trees would not. Roots of these plants can cause problems in sewer lines and infiltration fields.
- Thinning operations in pure or mixed stands of Grand fir, Pacific silver fir, Noble fir, Sitka spruce, Western red cedar, Western hemlock, Pacific dogwood, and Red alder can cause serious disease problems. Disease can become established through damaged limbs, trunks, roots, and freshly cut stumps. Diseased and weakened trees are also susceptible to insect attack.

3.1.1.4 Maintenance Standards

- Inspect flagged and/or fenced areas regularly to make sure flagging or fencing has not been removed or damaged. If the flagging or fencing has been damaged or visibility reduced, it shall be repaired or replaced immediately and visibility restored.
- If tree roots have been exposed or injured, “prune” cleanly with an appropriate pruning saw or loppers directly above the damaged roots and recover with native soils. Treatment of sap flowing trees (fir, hemlock, pine, soft maples) is not advised as sap forms a natural healing barrier.

3.1.2 BMP C102: Buffer Zone

3.1.2.1 Purpose

An undisturbed area or strip of natural vegetation or an established suitable planting that will provide a living filter to reduce soil erosion and runoff velocities.

3.1.2.2 Conditions of Use

Natural buffer zones are used along streams, wetlands and other bodies of water that need protection from erosion and sedimentation. Vegetative buffer zones can be used to protect natural swales and can be incorporated into the natural landscaping of an area.

Critical-areas buffer zones should not be used as sediment treatment areas. Do not disturb critical area buffers. The City may expand the buffer widths temporarily to allow the use of the expanded area for removal of sediment.

3.1.2.3 Design and Installation Specifications

- Preserve natural vegetation or plantings in clumps, blocks, or strips as this is generally the easiest and most successful method. However, single specimen trees and plants should also be preserved.
- Leave all unstable slopes in their natural, undisturbed state.
- Mark clearing limits and keep all equipment and construction debris out of the natural areas. Steel construction fencing is the most effective method of protecting sensitive areas and buffers. Alternatively, wire-backed silt fence on steel posts is marginally effective. Flagging alone is typically not effective and will not be allowed.
- Keep all excavations outside the dripline of trees and shrubs.
- Do not push debris or extra soil into the buffer zone area because it will cause damage from burying and smothering.
- Vegetative buffer zones for streams, lakes or other waterways shall be established by the City or other state or federal permits or approvals.

3.1.2.4 Maintenance Standards

- Inspect the area frequently to make sure flagging remains in place and the area remains undisturbed.

3.1.3 BMP C103: High Visibility Plastic or Metal Fence

3.1.3.1 Purpose

Fencing is intended to:

- Restrict clearing to approved limits.
- Prevent disturbance of sensitive areas, their buffers, and other areas required to be left undisturbed.
- Limit construction traffic to designated construction entrances or roads.
- Protect areas where marking with survey tape may not provide adequate protection.

3.1.3.2 Conditions of Use

To establish clearing limits, plastic or metal fence may be used:

- At the boundary of sensitive areas, their buffers, and other areas required to be left uncleared.
- As necessary to control vehicle access to and on the site.

3.1.3.3 Design and Installation Specifications

- High visibility plastic fence shall be composed of a high-density polyethylene material and shall be at least four feet in height. Posts for the fencing shall be steel or wood and placed every 6 feet on center (maximum) or as needed to ensure rigidity. The fencing shall be fastened to the post every six inches with a polyethylene tie. On long continuous lengths of fencing, a tension wire or rope shall be used as a top stringer to prevent sagging between posts. See City of Auburn Construction Standards for high visibility fence specifications.
- Design and install metal fences according to the manufacturer's specifications.
- Metal fences shall be at least 3 feet high and must be highly visible.
- Do not wire or staple fences to trees.

3.1.3.4 Maintenance Standards

- If the fence has been damaged or visibility reduced, it shall be repaired or replaced immediately and visibility restored.

3.1.4 BMP C104: Stake and Wire Fence

3.1.4.1 Purpose

Fencing is intended to:

- Restrict clearing to approved limits.
- Prevent disturbance of sensitive areas, their buffers, and other areas required to be left undisturbed.
- Limit construction traffic to designated construction entrances or roads.
- Protect areas where marking with survey tape may not provide adequate protection.

3.1.4.2 Conditions of Use

To establish clearing limits, stake or wiring fence may be used:

- At the boundary of sensitive areas, their buffers, and other areas required to be left uncleared.
- As necessary to control vehicle access to and on the site.

3.1.4.3 Design and Installation Specifications

- See Figure II-3-1 for details.
- Use more substantial fencing if the fence does not prevent encroachment into those areas that are not to be disturbed.

3.1.4.4 Maintenance Standards

- If the fence has been damaged or visibility reduced, it shall be repaired or replaced immediately and visibility restored.

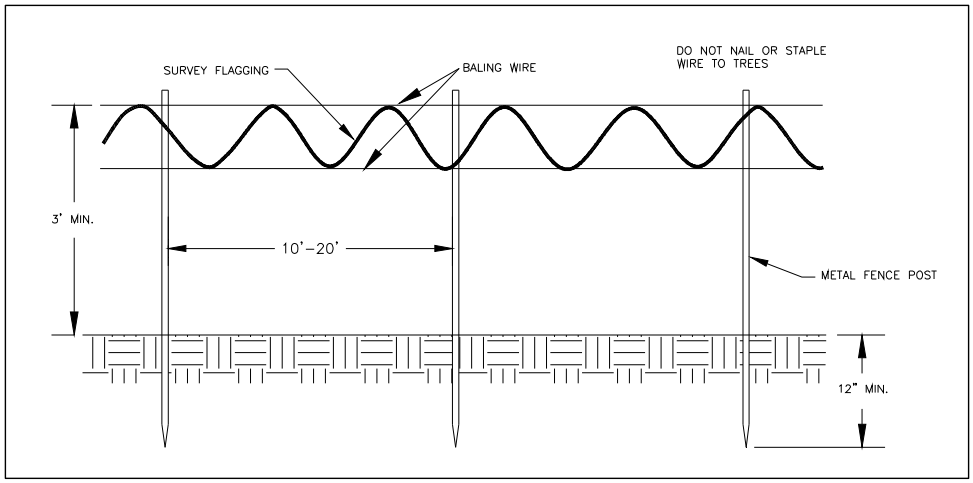

Figure II-3-1. Stake and Wire Fence

3.1.5 BMP C105: Stabilized Construction Entrance

3.1.5.1 Purpose

Construction entrances are stabilized to reduce the amount of sediment transported onto paved roads by vehicles or equipment by constructing a stabilized pad of quarry spalls at entrances to construction sites.

3.1.5.2 Conditions of Use

Construction entrances shall be stabilized wherever traffic will be leaving a construction site and traveling on paved roads or other paved areas within 1,000 feet of the site.

On large commercial, highway, and road projects, the designer should include enough extra materials in the contract to allow for additional stabilized entrances not shown in the initial Construction SWPPP. It is difficult to determine exactly where access to these projects will take place; additional materials will enable the contractor to install them where needed.

3.1.5.3 Design and Installation Specifications

- See Figure II-3-2 for details.

  NOTE: Reduce the length of the entrance to the maximum practicable size when the size or configuration of the site does not allow the full 100-foot length.

- Place a separation geotextile under the spalls to prevent fine sediment from pumping up into the rock pad. The geotextile shall meet the following standards:
  - Grab Tensile Strength (ASTM D4751) – 200 psi min.
  - Grab Tensile Elongation (ASTM D4632) – 30% max.
  - Mullen Burst Strength (ASTM D3786-80a) – 400 psi min.
  - AOS (ASTM D4751) – 20 to 45 (U.S. standard sieve size)
- Consider early installation of the first lift of asphalt in areas that will be paved; this can be used as a stabilized entrance. Also consider the installation of excess concrete as a stabilized entrance. During large concrete pours, excess concrete is often available for this purpose.
- Install fencing (see BMPs C103 and C104) as necessary to restrict traffic to the construction entrance.
- Whenever possible, construct the entrance on a firm, compacted subgrade. This can substantially increase the effectiveness of the pad and reduce the need for maintenance.

3.1.5.4 Maintenance Standards

- Add quarry spalls if the pad is no longer in accordance with the specifications.
- If the entrance is not preventing sediment from being tracked onto pavement, then alternative measures to keep the streets free of sediment shall be used. This may

include street sweeping, an increase in the dimensions of the entrance, or the installation of a wheel wash.

- No tracking of sediment onto the roadway is allowed. If sediment is tracked onto the road, clean the road thoroughly by shoveling or pickup sweeping. Transport sediment to a controlled sediment disposal area.
- Keep streets clean at ALL times. Clean tracked sediment immediately.
- Street washing of sediment to the storm drain system is not allowed.
- Immediately remove any quarry spalls that are loosened from the pad and end up on the roadway.
- Install fencing (BMPs C103 and C104) to control traffic if vehicles are entering or exiting the site at points other than the construction entrance(s).
- Upon project completion and site stabilization, permanently stabilize all construction accesses intended as permanent access for maintenance.

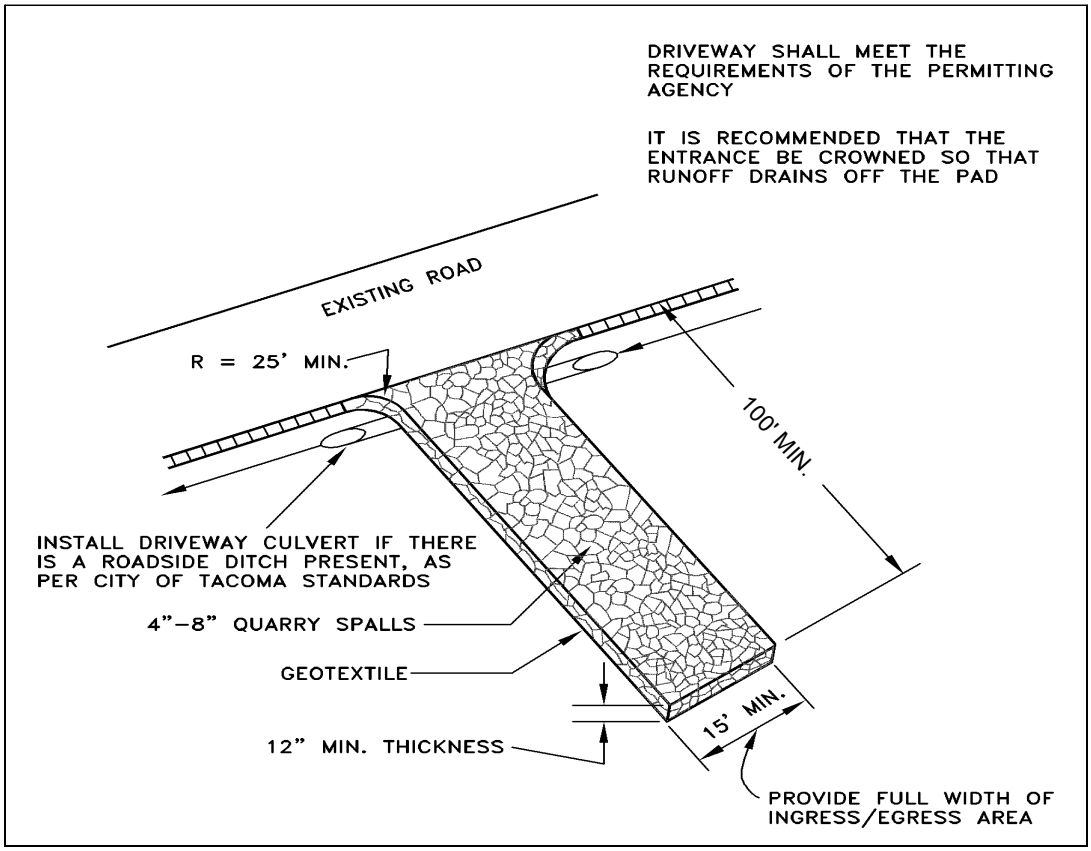

Figure II-3-2. Stabilized Construction Entrance

Figure II-3-3 shows a small site, stabilized construction entrance.

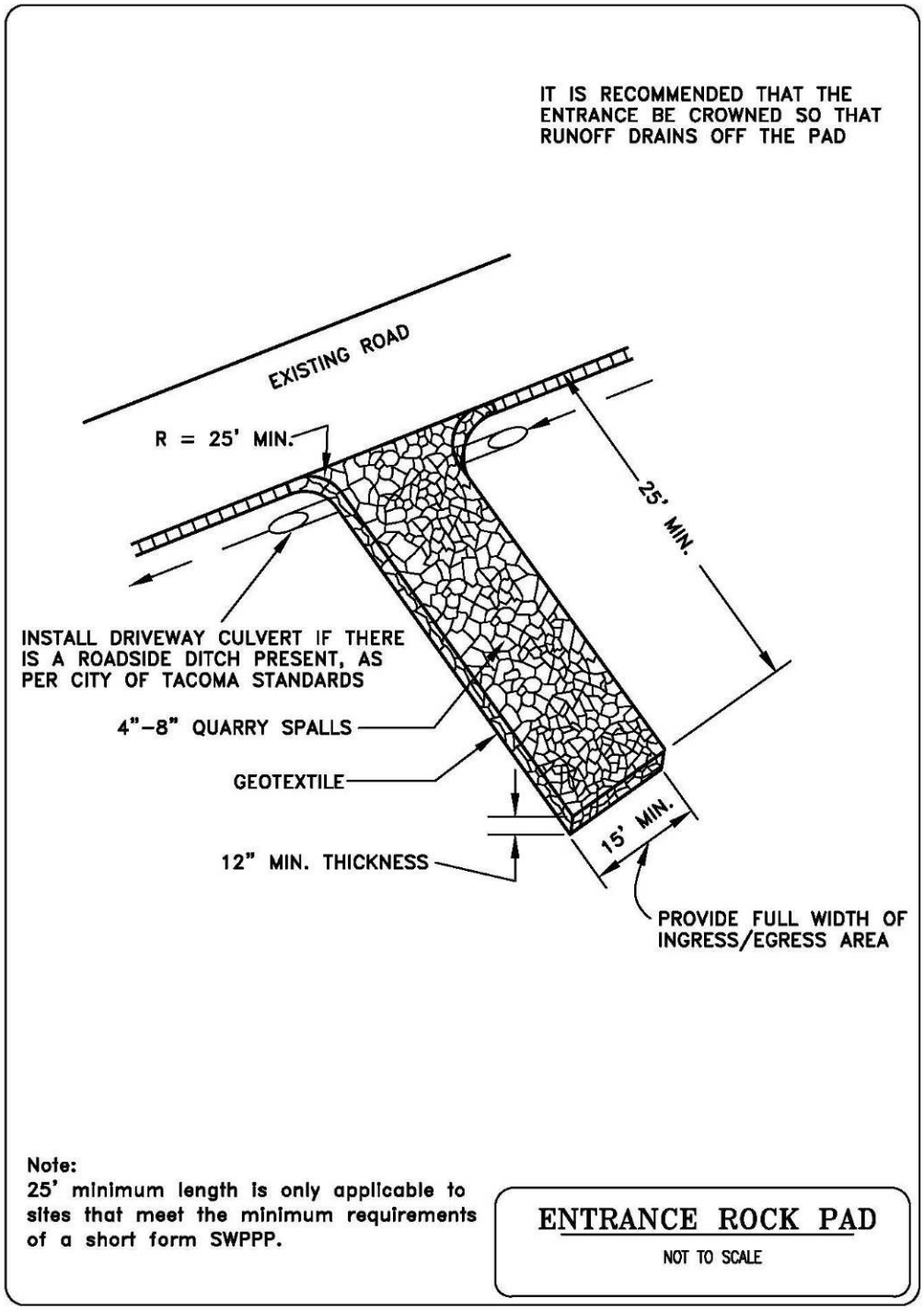

Figure II-3-3. Small-Site Stabilized Construction Entrance

3.1.6 BMP C106: Wheel Wash

3.1.6.1 Purpose

Wheel washes reduce the amount of sediment transported onto paved roads by motor vehicles.

3.1.6.2 Conditions of Use

Can be used when a stabilized construction entrance (see BMP C105) is not preventing sediment from being tracked onto pavement.

- Wheel washing is generally an effective BMP when installed with careful attention to topography. For example, a wheel wash can be detrimental if installed at the top of a slope abutting a right-of-way where the water from the dripping truck can run unimpeded into the street.
- Pressure washing combined with an adequately sized and surfaced pad with direct drainage to a large 10-foot x 10-foot sump can be very effective.

3.1.6.3 Design and Installation Specifications

Suggested details are shown in Figure II-3-4. The City may allow other designs. A minimum of 6 inches of asphalt treated base (ATB) over crushed base material or 8 inches over a good subgrade is recommended to pave the wheel wash.

Use a low clearance truck to test the wheel wash before paving. Either a belly dump or lowboy will work well to test clearance.

Keep the water level from 12 to 14 inches deep to avoid damage to truck hubs and filling the truck tongues with water.

Midpoint spray nozzles are only needed in extremely muddy conditions.

Design wheel wash systems with a small grade change, 6 to 12 inches for a 10-foot-wide pond, to allow sediment to flow to the low side of pond to help prevent re-suspension of sediment. A drainpipe with a 2- to 3-foot riser should be installed on the low side of the pond to allow for easy cleaning and refilling. Polymers may be used to promote coagulation and flocculation in a closed-loop system. Polyacrylamide (PAM) added to the wheel wash water at a rate of 0.25 - 0.5 pounds per 1,000 gallons of water increases effectiveness and reduces cleanup time. If PAM is already being used for dust or erosion control and is being applied by a water truck, the same truck can be used to change the wash water.

3.1.6.4 Maintenance Standards

The wheel wash should start out the day with fresh water.

The wash water should be changed a minimum of once per day. On large earthwork jobs where more than 10 to 20 trucks per hour are expected, the wash water will need to be changed more often.

Wheel wash or tire bath wastewater shall be discharged to a separate on-site treatment system, such as closed-loop recirculation or land application, or to the sanitary sewer with a King County – Metro wastewater discharges from construction sites permit.

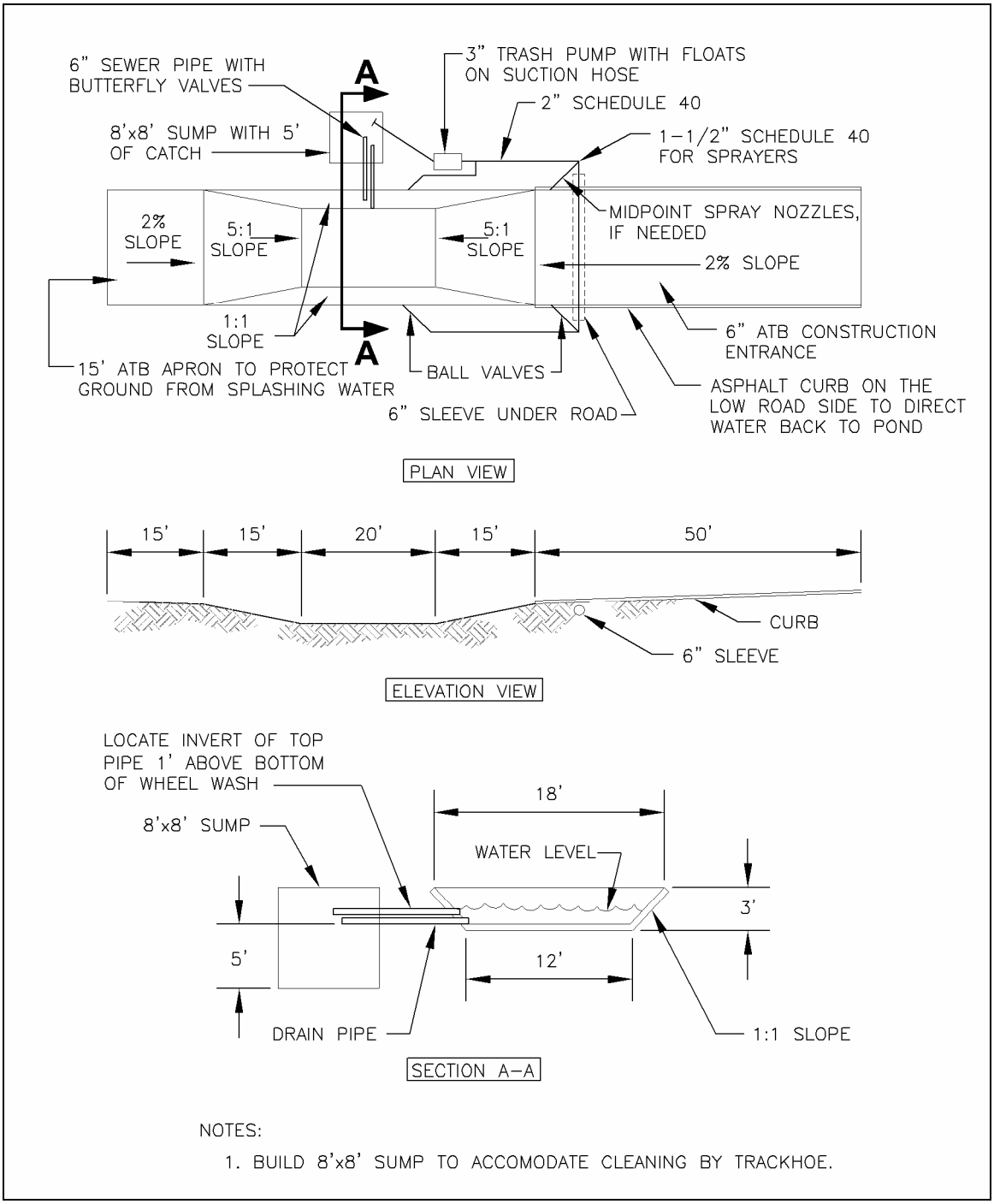

Figure II-3-4. Wheel Wash

3.1.7 BMP C107: Construction Road/Parking Area Stabilization

3.1.7.1 Purpose

Stabilizing subdivision roads, parking areas and other onsite vehicle transportation routes immediately after grading reduces erosion caused by construction traffic or runoff.

3.1.7.2 Conditions of Use

- Stabilize roads or parking areas wherever they are constructed, whether permanent or temporary, for use by construction traffic.
- Install fencing (see BMPs C103 and C104), if necessary, to limit the access of vehicles to only those roads and parking areas that are stabilized.

3.1.7.3 Design and Installation Specifications

- On areas that will receive asphalt as part of the project, install the first lift as soon as possible.
- Apply a 6-inch depth of 2- to 4-inch crushed rock, gravel base, or crushed surfacing base course immediately after grading or utility installation. A 4-inch course of asphalt treated base (ATB) may also be used, or the road/parking area may be paved. It may also be possible to use cement or calcium chloride for soil stabilization. If cement or cement kiln dust is used for roadbase stabilization, pH monitoring and BMPs are necessary to evaluate and minimize the effects on stormwater. If the area will not be used for permanent roads, parking areas, or structures, a 6-inch depth of hog fuel may also be used, but this is likely to require more maintenance. Whenever possible, place construction roads and parking areas on a firm, compacted subgrade.
- Temporary road gradients shall not exceed 15 percent. Carefully grade roadways to drain. Provide drainage ditches on each side of the roadway in the case of a crowned section, or on one side in the case of a super-elevated section. Direct drainage ditches to a sediment control BMP.
- Rather than relying on ditches, it may also be possible to grade the road so that runoff sheet-flows into a heavily vegetated area with a well-developed topsoil. Landscaped areas are not adequate. If this area has at least 50 feet of vegetation, then it is generally preferable to use the vegetation to treat runoff, rather than a sediment pond or trap. The 50 feet shall not include wetlands. If runoff is allowed to sheetflow through adjacent vegetated areas, it is vital to design the roadways and parking areas so that no concentrated runoff is created.
- Protect storm drain inlets to prevent sediment-laden water entering the storm drain system (see BMP C220).

3.1.7.4 Maintenance Standards

- Inspect stabilized areas regularly, especially after large storm events.
- Add crushed rock, gravel base, hog fuel, etc. as required to maintain a stable driving surface and to stabilize any eroded areas.
- Following construction, restore all areas to preconstruction condition or better to prevent future erosion.

3.1.8 BMP C120: Temporary and Permanent Seeding

3.1.8.1 Purpose

Seeding is intended to reduce erosion by stabilizing exposed soils. A well-established vegetative cover is one of the most effective methods of reducing erosion.

3.1.8.2 Conditions of Use

- Seeding may be used throughout the project on disturbed areas that have reached final grade or that will remain unworked for more than 30 days.
- Channels that will be vegetated should be installed before major earthwork and hydroseeded with a Bonded Fiber Matrix. The vegetation should be well established (i.e., 75 percent cover) before water is allowed to flow in the ditch. With channels that will have high flows, install erosion control blankets over the hydroseed. If vegetation cannot be established from seed before water is allowed in the ditch, sod should be installed in the bottom of the ditch over hydromulch and blankets.
- Seed retention/detention ponds as required.
- Mulch is required at all times because it protects seeds from heat, moisture loss, and transport due to runoff.
- All disturbed areas shall be reviewed in late August to early September and all seeding shall be completed by the end of September. Otherwise, vegetation will not establish itself enough to provide more than average protection.
- At final site stabilization, seed and mulch all disturbed areas not otherwise vegetated or stabilized. Final stabilization means the completion of all soil disturbing activities at the site and the establishment of a permanent vegetative cover, or equivalent permanent stabilization measures (such as pavement, riprap, gabions, or geotextiles) which will prevent erosion.

3.1.8.3 Design and Installation Specifications

- Seed during seasons most conducive to plant growth. The optimum seeding windows for western Washington are April 1 through June 30 and September 1 through October 1. Seeding that occurs between July 1 and August 30 will require irrigation until 75 percent grass cover is established. Seeding that occurs between October 1 and March 30 will require a mulch or plastic cover until 75 percent grass cover is established.
- Deviation from these specifications shall be allowed if alternatives are developed by a licensed Landscape Professional and approved by the City.
- To prevent seed from being washed away, confirm that all required surface water control measures have been installed.
- The seedbed should be firm and rough. All soil should be roughened no matter what the slope. If compaction is required for engineering purposes, track walk slopes before seeding. Backblading or smoothing of slopes greater than 4:1 is not allowed if they are to be seeded.

- New and more effective restoration-based landscape practices rely on deeper incorporation than that provided by a simple single-pass rototilling treatment. Wherever practical, the subgrade should be initially ripped to improve long-term permeability, infiltration, and water inflow qualities. At a minimum for permanent areas, use soil amendments to achieve organic matter and permeability performance defined in engineered soil/landscape systems. For systems that are deeper than 8 inches, complete the rototilling process in multiple lifts, or prepare the soil system properly and then place it to achieve the specified depth.
- Organic matter is the most appropriate form of "fertilizer" because it provides nutrients (including nitrogen, phosphorus, and potassium) in the least water-soluble form. A natural system typically releases 2-10 percent of its nutrients annually. Chemical fertilizers have since been formulated to simulate what organic matter does naturally.
- In general, 10-4-6 N-P-K (nitrogen-phosphorus-potassium) fertilizer can be used at a rate of 90 pounds per acre. Always use slow-release fertilizers because they are more efficient and have fewer environmental impacts. It is recommended that soils tests are conducted in areas being seeded for final landscaping to determine the exact type and quantity of fertilizer needed. This will prevent the over-application of fertilizer. Fertilizer should not be added to the hydromulch machine and agitated more than 20 minutes before it is to be used. If agitated too much, the slow-release coating is destroyed.
- There are numerous products available on the market that take the place of chemical fertilizers. These include several with seaweed extracts that are beneficial to soil microbes and organisms. If 100 percent cottonseed meal is used as the mulch in hydroseed, chemical fertilizer may not be necessary. Cottonseed meal is a good source of long-term, slow-release, available nitrogen.
- Hydroseed applications shall include a minimum of 1,500 pounds per acre of mulch with 3 percent tackifier. Mulch may be made up of 100 percent: cottonseed meal; fibers made of wood, recycled cellulose, hemp, and kenaf; compost; or blends of these. Tackifier shall be plant-based, such as guar or alpha plantago, or chemical-based such as polyacrylamide or polymers. Any mulch or tackifier product used shall be installed per manufacturer's instructions. Generally, mulches come in 40-50 pound bags. Seed and fertilizer are added at time of application.
- Mulch is always required for seeding. Mulch can be applied on top of the seed or simultaneously by hydroseeding.
- On steep slopes, Bonded Fiber Matrix (BFM) or Mechanically Bonded Fiber Matrix (MBFM) products should be used. BFM/MBFM products are applied at a minimum rate of 3,000 pounds per acre of mulch with approximately 10 percent tackifier. Application is made so that a minimum of 95 percent soil coverage is achieved. Numerous products are available commercially and should be installed per manufacturer's instructions. Most products require 24 to 36 hours to cure before a rainfall and cannot be installed on wet or saturated soils. Generally, these products come in 40 to 50 pound bags and include all necessary ingredients except for seed and fertilizer.

- BFMs and MBFMs have some advantages over blankets:
  - No surface preparation required;
  - On slopes steeper than 2.5:1, blanket installers may need to be roped and harnessed for safety;
- In most cases, the shear strength of blankets is not a factor when used on slopes, only when used in channels. BFMs and MBFMs are good alternatives to blankets in most situations where vegetation establishment is the goal.
- When installing seed via hydroseeding operations, only about 1/3 of the seed actually ends up in contact with the soil surface. This reduces the ability to establish a good stand of grass quickly. One way to overcome this is to increase seed quantities by up to 50 percent.
- Vegetation establishment can also be enhanced by dividing the hydromulch operation into two phases:
  - Phase 1- Install all seed and fertilizer with 25 to 30 percent mulch and tackifier onto soil in the first lift;
  - Phase 2- Install the rest of the mulch and tackifier over the first lift.
- An alternative is to install the mulch, seed, fertilizer, and tackifier in one lift. Then, spread or blow straw over the top of the hydromulch at a rate of about 800 to 1,000 pounds per acre. Hold straw in place with a standard tackifier. Both of these approaches will increase cost moderately but will greatly improve and enhance vegetative establishment. The increased cost may be offset by the reduced need for:
  - Irrigation
  - Reapplication of mulch
  - Repair of failed slope surfaces
  - This technique works with standard hydromulch (1,500 pounds per acre minimum) and BFM/MBFMs (3,000 pounds per acre minimum).
- Provide a healthy topsoil to areas to be permanently landscaped. This will reduce the need for fertilizers, improve overall topsoil quality, provide for better vegetal health and vitality, improve hydrologic characteristics, and reduce the need for irrigation. See the Post-Construction Soil Quality and Depth BMP in Volume VI for more information. Areas that will be seeded only and not landscaped may need compost or meal-based mulch included in the hydroseed in order to establish vegetation. Replace native topsoil on the disturbed soil surface before application.
- Seed that is installed as a temporary measure may be installed by hand if it will be covered by straw, mulch, or topsoil. Seed that is installed as a permanent measure may be installed by hand on small areas (usually less than 1 acre) that will be covered with mulch, topsoil, or erosion blankets. The seed mixes listed below include recommended mixes for both temporary and permanent seeding. These mixes, with the exception of the wetland mix, shall be applied at a rate of 120 pounds per acre. This rate can be reduced if soil amendments or slow-release fertilizers are used. Local suppliers or the local conservation district should be consulted for their

recommendations because the appropriate mix depends on a variety of factors, including location, exposure, soil type, slope, and expected foot traffic. Alternative seed mixes approved by the City of Auburn may be used.

- Table II-3-1 represents the standard mix for those areas where just a temporary vegetative cover is required.
- Table II-3-2 provides just one recommended possibility for landscaping seed.
- The turf seed mix in Table II-3-3 is for dry situations. The advantage is that this mix requires very little maintenance.
- Table II-3-4 presents a mix recommended for bioswales and other intermittently wet areas.
- The seed mix shown in Table II-3-5 is a recommended low-growing, relatively non-invasive seed mix appropriate for very wet areas that are not regulated wetlands. Other mixes may be appropriate, depending on the soil type and hydrology of the area. Recent research suggests that bentgrass (agrostis sp.) should be emphasized in wet-area seed mixes. Apply this mixture at a rate of 60 pounds per acre.
- The meadow seed mix in Table II-3-6 is recommended for areas that will be maintained infrequently or not at all and where colonization by native plants is desirable. Likely applications include rural road and utility right-of-way. Seeding should take place in September or very early October in order to obtain adequate establishment prior to the winter months. The appropriateness of clover in the mix may need to be considered, as this can be a fairly invasive species. If the soil is amended, the addition of clover may not be necessary.

3.1.8.4 Maintenance Standards

- Reseed any seeded areas that fail to establish at least 80 percent cover within 6 weeks from the initial seeding (100 percent cover for areas that receive sheet or concentrated flows). If reseeding is ineffective, use an alternate method, such as sodding, mulching, or nets/blankets. If winter weather prevents adequate grass growth, this time limit may be relaxed at the discretion of the City.
- After adequate cover is achieved, reseed and protect with mulch any areas that experience erosion. If the erosion problem is drainage related, the problem shall be fixed and the eroded area reseeded and protected by mulch.
- Water seeded areas if necessary. Watering shall not cause runoff.

Table II-3-1. Temporary Erosion Control Seed Mix

	% Weight	% Purity	% Germination
Chewings or annual bluegrass *Festuca rubra var. commutate or Poa anna*	40	98	90
Perennial rye *Lolium perenne*	50	98	90
Redtop or colonial bentgrass *Agrostis alba or Agrostis tenuis*	5	92	85
White Dutch clover *Trifolium repens*	5	98	90

Table II-3-2. Landscaping Seed Mix

	% Weight	% Purity	% Germination
Perennial rye *Lolium perenne*	70	98	90
Chewings and red fescue blend *Festuca rubra var commutate or Festuca rubra*	30	98	90

Table II-3-3. Low-Growing Turf Seed Mix

	% Weight	% Purity	% Germination
Dwarf tall fescue (several varieties) *Festuca arundinacea var.*	45	98	90
Dwarf perennial rye (Barclay) *Lolium perenne var. barclay*	30	98	90
Red fescue *Festuca rubra*	20	98	90
Colonial bentgrass *Agrostis tenuis*	5	98	90

Table II-3-4. Bioswale Seed Mix[1]

	% Weight	% Purity	% Germination
Tall or meadow fescue *Festuca arundinacea or Festuca elatior*	75-80	98	90
Seaside/Creeping bentgrass *Agrostis palustriis*	1-15	92	85
Redtop bentgrass *Agrostis alba or Agrostis gigantea*	5-10	90	80

[1]Modified Briargreen, Inc. Hydroseeding Guide Wetlands Seed Mix

Table II-3-5. Wet Area Seed Mix

	% Weight	% Purity	% Germination
Tall or meadow fescue *Festuca arundinacea or Festuca elatior*	60-70	98	90
Seaside/Creeping bentgrass *Agrostis palustriis*	10-15	98	85
Meadow foxtail *Alepocurus pratensis*	10-15	90	80
Alsike clover *Trifolium hybridium*	1-6	98	90
Redtop bentgrass *Agrostis alba or Agrostis gigantea*	106	92	85

Table II-3-6. Meadow Seed Mix

	% Weight	% Purity	% Germination
Redtop or Oregon bentgrass *Agrostis alba or Agrostis oregonensis*	20	92	85
Red fescue *Festuca rubra*	70	98	90
White Dutch clover *Trifolium repens*	10	98	90

3.1.9 BMP C121: Mulching

3.1.9.1 Purpose

The purpose of mulching soils is to provide immediate temporary protection from erosion. Mulch also enhances plant establishment by conserving moisture, holding fertilizer, seed, and topsoil in place, and moderating soil temperatures. There is an enormous variety of mulches that can be used. Only the most common types are discussed in this section.

3.1.9.2 Conditions of Use

As a temporary cover measure, mulch should be used:

- On disturbed areas that require cover measures for less than 30 days.
- As a cover for seed during the wet season and during the hot summer months.
- During the wet season on slopes steeper than 3H:1V with more than 10 feet of vertical relief.
- Mulch may be applied at any time of the year and must be refreshed periodically.

3.1.9.3 Design and Installation Specifications

For mulch materials, application rates, and specifications, see Table II-3-7.

NOTE: Thicknesses may be increased for disturbed areas in or near sensitive areas or other areas highly susceptible to erosion.

Mulch used within the ordinary high-water mark of surface waters should be selected to minimize potential flotation of organic matter. Composted organic materials have higher specific gravities (densities) than straw, wood, or chipped material.

3.1.9.4 Maintenance Standards

- The thickness of the cover must be maintained.
- Re-mulch and/or protect with a net or blanket any areas that experience erosion. If the erosion problem is drainage related, then fix the problem and remulch the eroded area.

Table II-3-7. Mulch Standards and Guidelines

Mulch Material	Quality Standards	Application Rates	Remarks
Straw	Air-dried; free from undesirable seed and coarse material.	3" thick; 5 bales per 1000 sf or 2 to 3 tons per acre.	Cost-effective protection when applied with adequate thickness. Hand-application generally requires greater thickness than blown straw. The thickness of straw may be reduced by half when used in conjunction with seeding. In windy areas, straw must be held in place by crimping, using a tackifier, or covering with netting. Blown straw always has to be held in place with a tackifier as even light winds will blow it away. Straw, however, has several deficiencies that should be considered when selecting mulch materials. If often introduces and/or encourages the propagation of weed species and it has no significant long-term benefits. Straw should be used only if mulches with long-term benefits are unavailable locally. It should also not be used within the ordinary high-water elevation of surface waters (due to flotation).
Hydro-mulch	No growth inhibiting factors.	Approx. 25-30 lbs per 1000 sf or 1500-2000 lbs per acre.	Shall be applied with hydromulcher. Shall not be used without seed and tackifier unless the application rate is at least doubled. Fibers longer than about ¾ - 1 inch clog hydromulch equipment. Fibers should be kept to less than ¾ inch.
Composte d Mulch and Compost	No visible water or dust during handling. Must be purchased from supplier with a Solid Waste Handling permit (unless exempt)	3" thick, min.; approx. 100 tons per acre (approx. 800 lbs. per yard).	Mulch is excellent for protecting final grades until landscaping because it can be directly seeded or tilled into soil as an amendment. Composted mulch has a coarser size gradation than compost. It is more stable and practical to use in wet areas and during rainy weather conditions.
Chipped Site Vegetation	Average size shall be several inches. Gradations from fine to 6-inches in length for texture, variation, and interlocking properties.	3" minimum thickness	This is a cost-effective way to dispose of debris from clearing and grubbing, and it eliminates the problems associated with burning. Generally, it should not be used on slopes above approx. 10% because of its tendency to be transported by runoff. It is not recommended within 200 feet of surface waters. If seeding is expected shortly after mulch, the decomposition of the chipped vegetation may tie up nutrients important to grass establishment.
Wood-based mulch	No visible water or dust during handling. Must be purchased from a supplier with a Solid Waste Handling permit or one exempt from solid waste regulations.	3" thick; approx. 100 tons per acre (approx. 800 lbs. per yard).	This material is often called "hog" or "hogged fuel". It is usable as a material for Stabilized Construction Entrances (BMP C105) and as a mulch. The use of mulch ultimately improves the organic matter in the soil. Special caution is advised regarding the source and composition of wood-based mulches. Its preparation typically does not provide any weed seed control, so evidence of residual vegetation in its composition or known inclusion of weed plants or seeds should be monitored and prevented (or minimized).

3.1.10 BMP C122: Nets and Blankets

3.1.10.1 Purpose

Erosion control nets and blankets are intended to prevent erosion and hold seed and mulch in place on steep slopes and in channels so that vegetation can become well established. In addition, some nets and blankets can be used to reinforce turf permanently to protect drainage ways during high flows. Nets (commonly called matting) are strands of material woven into an open, but high-tensile strength net (for example, coconut fiber matting). Blankets are strands of material that are not tightly woven, but instead form a layer of interlocking fibers, typically held together by a biodegradable or photodegradable netting (for example, excelsior or straw blankets). They generally have lower tensile strength than nets, but cover the ground more completely. Coir (coconut fiber) fabric comes as both nets and blankets.

3.1.10.2 Conditions of Use

Erosion control nets and blankets should be used:

- To aid permanent vegetated stabilization of slopes 2H:1V or greater and with more than 10 feet of vertical relief.
- For drainage ditches and swales (highly recommended). The application of appropriate netting or blanket to drainage ditches and swales can protect bare soil from channelized runoff while vegetation is established. Nets and blankets also can capture a great deal of sediment due to their open, porous structure. Synthetic nets and blankets can be used to stabilize channels permanently and may provide a cost-effective, environmentally preferable alternative to riprap. 100 percent synthetic blankets manufactured for use in ditches may be easily reused as temporary ditch liners.
- Disadvantages of blankets include:
    - Surface preparation required;
    - On slopes steeper than 2.5:1, blanket installers may need to be roped and harnessed for safety;
- Advantages of blankets include:
    - Can be installed without mobilizing special equipment;
    - Can be installed by anyone with minimal training;
    - Can be installed in stages or phases as the project progresses;
    - Seed and fertilizer can be hand-placed by the installers as they progress down the slope;
    - Can be installed in any weather;
    - There are numerous types of blankets that can be designed with various parameters in mind. Those parameters include: fiber blend, mesh strength, longevity, biodegradability, cost, and availability.

3.1.10.3 Design and Installation Specifications

- See Figure II-3-5 and Figure II-3-6 for typical orientation and installation of blankets used in channels and as slope protection. Note: these are typical only; all blankets must be installed per manufacturer's installation instructions.
- Installation is critical to the effectiveness of these products. If good ground contact is not achieved, runoff can concentrate under the product, resulting in significant erosion.

Installation of Blankets on Slopes:

- Complete final grade and track walk up and down the slope.
- Install hydromulch with seed and fertilizer.
- Dig a small trench, approximately 12 inches wide by 6 inches deep along the top of the slope.
- Install the leading edge of the blanket into the small trench and staple approximately every 18 inches.

  NOTE: Staples are metal. "U"-shaped, and a minimum of 6 inches long. Longer staples are used in sandy soils. Biodegradable stakes are also available and should be used where applicable.
- Roll the blanket slowly down the slope as the installer walks backwards.
- **NOTE:** The blanket rests against the installer's legs. Staples are installed as the blanket is unrolled. It is critical that the proper staple pattern in used for the blanket being installed. The blanket should not be allowed to roll down the slope on its own as this stretches the blanket, making it impossible to maintain soil contact. In addition, no one should be allowed to walk on the blanket after it is in place.
- If the blanket is not long enough to cover the entire slope length, the trailing edge of the upper blanket should overlap the leading edge of the lower blanket and be stapled. On steeper slopes, this overlap should be installed in a small trench, stapled, and covered with soil.
- With the variety of products available, it is impossible to cover all the details of appropriate use and installation. Therefore, it is critical that the design engineer consults the manufacturer's information and that a site visit takes place in order to insure that the product specified is appropriate. Information is also available at the following websites:
  - WSDOT: http://www.wsdot.wa.gov/eesc/environmental/
  - Texas Transportation Institute: http://www.dot.state.tx.us/insdtdot/orgchart/cmd/erosion/contents.htm

- Jute matting must be used in conjunction with mulch (BMP C121). Excelsior, woven straw blankets, and coir (coconut fiber) blankets may be installed without mulch. There are many other types of erosion control nets and blankets on the market that may be appropriate in certain circumstances.
- In general, most nets (e.g., jute matting) require mulch in order to prevent erosion because they have a fairly open structure. Blankets typically do not require mulch because they usually provide complete protection of the surface.
- Extremely steep, unstable, wet, or rocky slopes are often appropriate candidates for use of synthetic blankets, as are riverbanks, beaches, and other high-energy environments. If synthetic blankets are used, the soil should be hydromulched first.
- 100 percent biodegradable blankets are available for use in sensitive areas. These organic blankets are usually held together with a paper or fiber mesh and stitching which may last up to a year.
- Most netting used with blankets is photodegradable, meaning it will break down under sunlight (not UV stabilized). However, this process can take months or years even under bright sun. Once vegetation is established, sunlight does not reach the mesh. It is not uncommon to find non-degraded netting still in place several years after installation. This can be a problem if maintenance requires the use of mowers or ditch cleaning equipment. In addition, birds and small animals can become trapped in the netting.

3.1.10.4 Maintenance Standards

- Good contact with the ground must be maintained, and erosion must not occur beneath the net or blanket.
- Repair or staple any areas of the net or blanket that are damaged or not in close contact with the ground.
- If erosion occurs due to poorly controlled drainage, fix the problem and protect the eroded area.

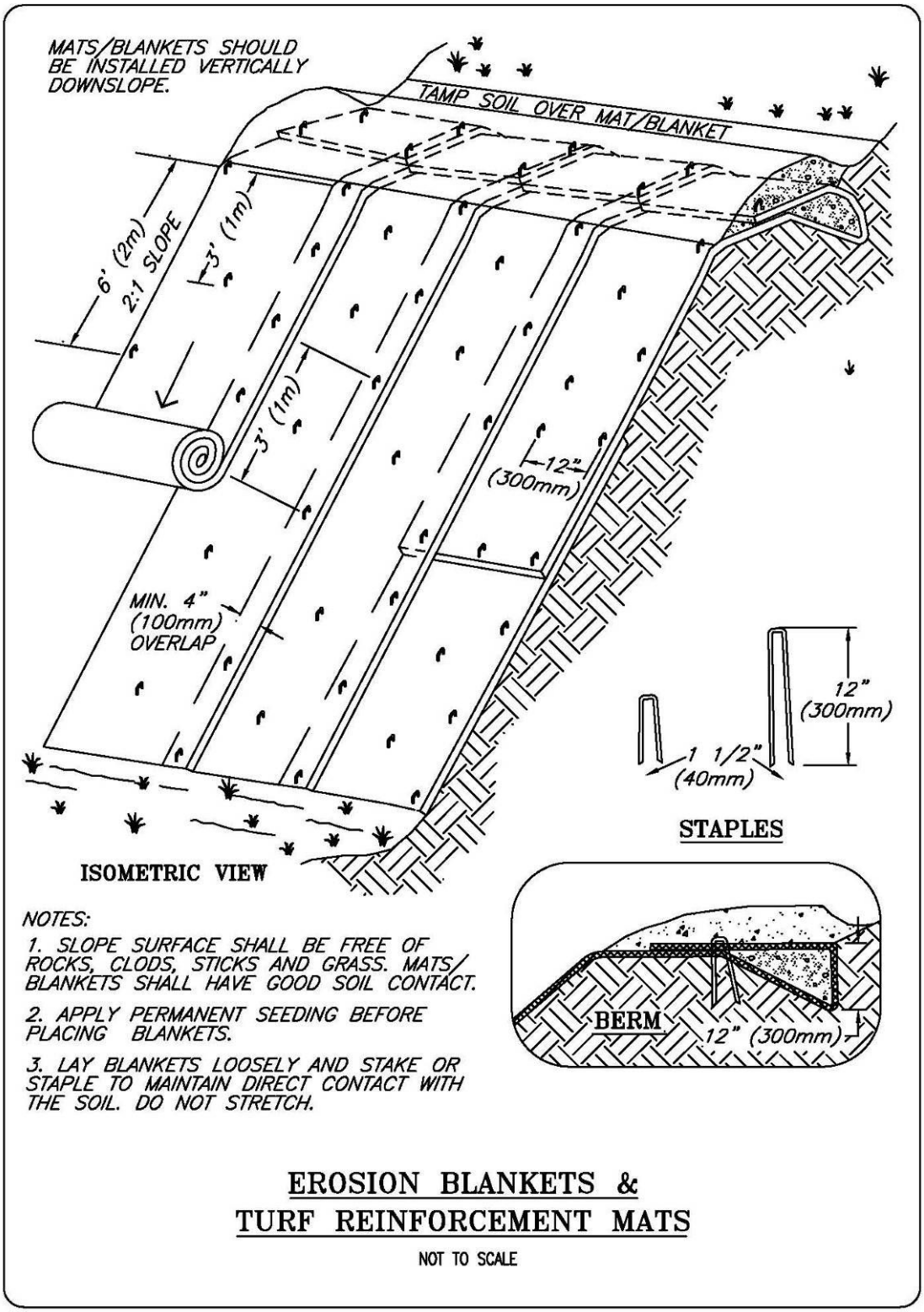

Figure II-3-5. Nets and Blankets – Slope Installation

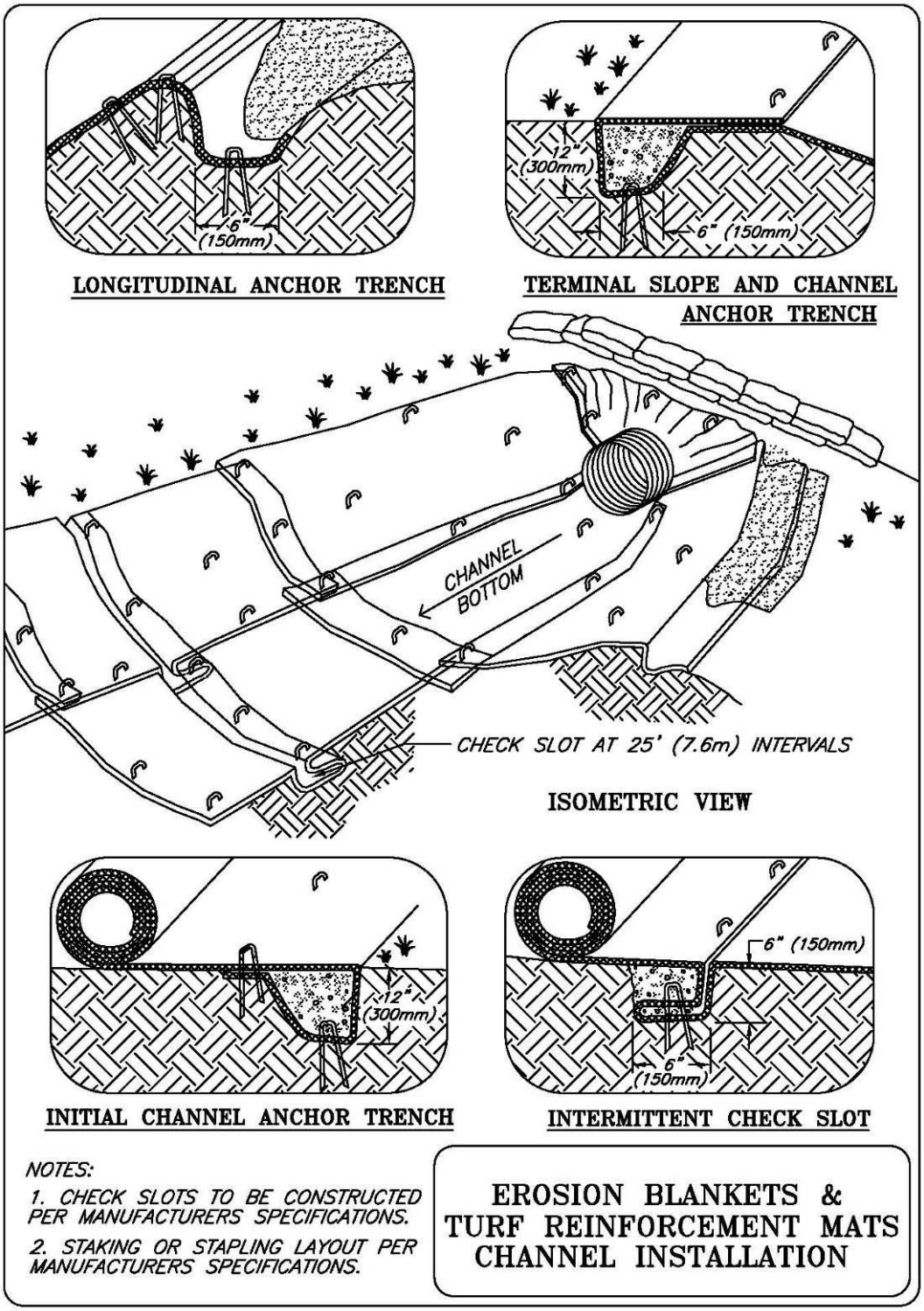

Figure II-3-6. Nets and Blankets – Channel Installation

3.1.11 BMP C123: Plastic Covering

3.1.11.1 Purpose

Plastic covering provides immediate, short-term erosion protection to slopes and disturbed areas.

3.1.11.2 Conditions of Use

See Figure II-3-7.

- Plastic covering may be used on disturbed areas that require cover measures for less than 30 days, except as stated below.
- Plastic is particularly useful for protecting cut and fill slopes and stockpiles. Note: The relatively rapid breakdown of most polyethylene sheeting makes it unsuitable for long-term (greater than six months) applications.
- Clear plastic sheeting can be used over newly-seeded areas to create a greenhouse effect and encourage grass growth if the hydroseed was installed too late in the season to establish 75 percent grass cover, or if the wet season started earlier than normal. Clear plastic should not be used for this purpose during the summer months because the resulting high temperatures can kill the grass.
- Due to rapid runoff caused by plastic sheeting, this method shall not be used upslope of areas that might be adversely impacted by concentrated runoff. Such areas include steep and/or unstable slopes.
- While plastic is inexpensive to purchase, the added cost of installation, maintenance, removal, and disposal can make this an expensive material.
- Whenever plastic is used to protect slopes, water collection measures must be installed at the base of the slope. These measures include plastic-covered berms, channels, and pipes used to convey clean rainwater away from bare soil and disturbed areas. At no time is clean runoff from a plastic covered slope to be mixed with dirty runoff from a project.
- Other uses for plastic include:
  - Temporary ditch liner;
  - Pond liner in temporary sediment pond;
  - Liner for bermed temporary fuel storage area if plastic is not reactive to the type of fuel being stored;
  - Emergency slope protection during heavy rains; and
  - Temporary drainpipe (“elephant trunk”) used to direct water.

3.1.11.3 Design and Installation Specifications

Plastic slope cover must be installed as follows:

- Run plastic up and down slope, not across slope.

- Plastic may be installed perpendicular to a slope if the slope length is less than 10 feet.
- Minimum of 8-inch overlap at seams.
- On long or wide slopes, or slopes subject to wind, all seams should be taped.
- Place plastic into a small (12-inch wide by 6-inch deep) slot trench at the top of the slope and backfill with soil to keep water from flowing underneath.
- Place sand filled burlap or geotextile bags every 3 to 6 feet along seams and pound a wooden stake through each to hold them in place. Alternative options for holding plastic in place exist and may be considered with City of Auburn approval.
- Inspect plastic for rips, tears, and open seams regularly and repair immediately. This prevents high velocity runoff from contacting bare soil, which causes extreme erosion;
- Sandbags may be lowered into place tied to ropes. However, all sandbags must be staked in place.

  NOTE: Methods other than staking down plastic with sandbags may be used with City of Auburn approval.

- Plastic sheeting shall have a minimum thickness of 0.06 millimeters.
- If erosion at the toe of a slope is likely, a gravel berm, riprap, or other suitable protection shall be installed at the toe of the slope in order to reduce the velocity of runoff.

3.1.11.4 Maintenance Standards

- Torn sheets must be replaced and open seams repaired.
- If the plastic begins to deteriorate due to ultraviolet radiation, it must be completely removed and replaced.
- When the plastic is no longer needed, it shall be completely removed.

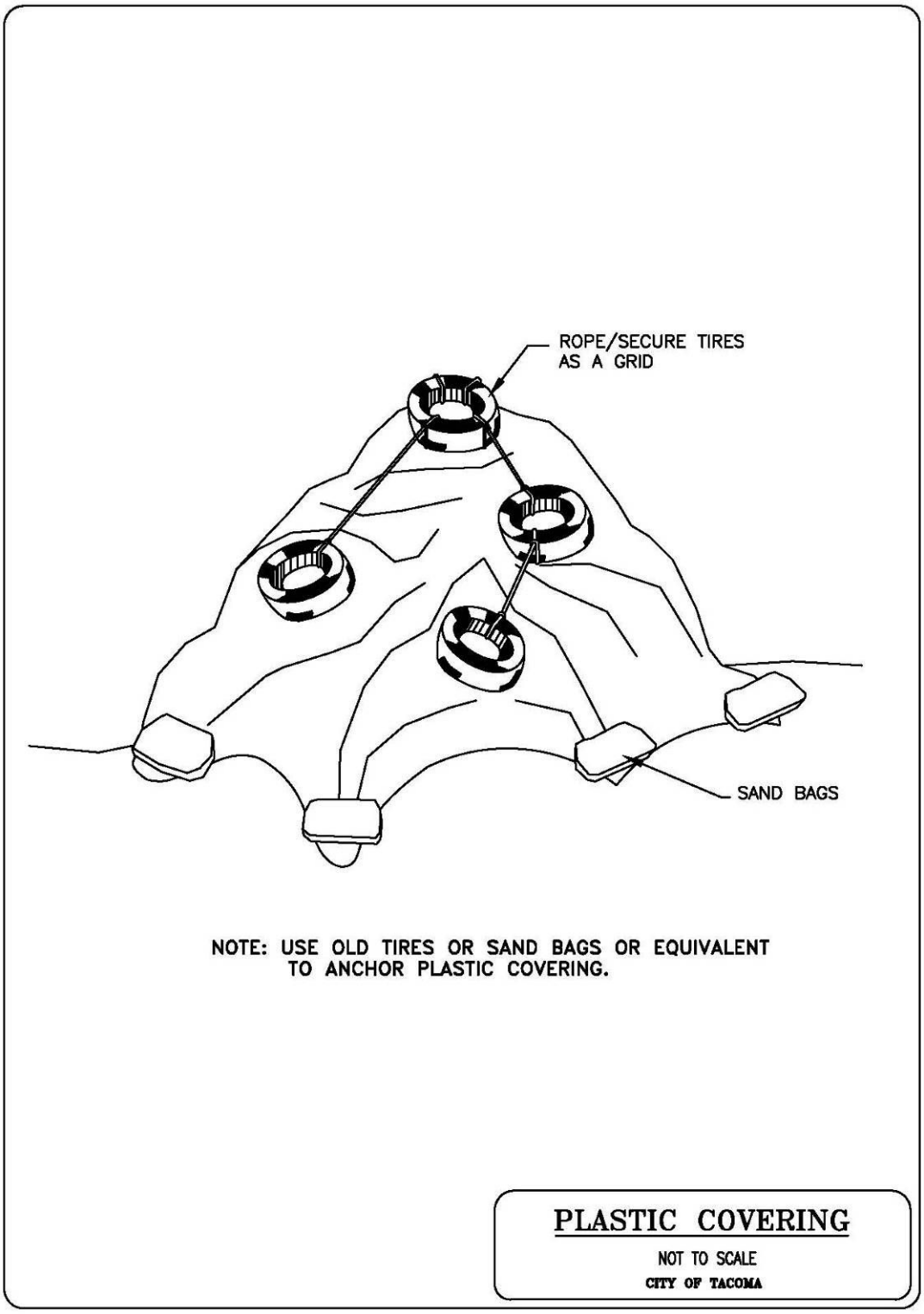

Figure II-3-7. Soil Erosion Protection – Plastic Covering

3.1.12 BMP C124: Sodding

3.1.12.1 Purpose

The purpose of sodding is to establish permanent turf for immediate erosion protection and to stabilize drainage ways where concentrated overland flow will occur.

3.1.12.2 Conditions of Use

Sodding may be used in the following areas:

- Disturbed areas that require short-term or long-term cover.
- Disturbed areas that require immediate vegetative cover.
- All waterways that require vegetative lining. Waterways may also be seeded rather than sodded, and protected with a net or blanket.

3.1.12.3 Design and Installation Specifications

Sod shall be free of weeds, of uniform thickness (approximately 1-inch thick), and shall have a dense root mat for mechanical strength.

The following steps are recommended for sod installation:

- Shape and smooth the surface to final grade in accordance with the approved grading plan. Overexcavate the swale 4 to 6 inches below design elevation to allow room for placing soil amendment and sod.
- Amend 4 inches (minimum) of compost into the top 8 inches of the soil if the organic content of the soil is less than ten percent or the permeability is less than 0.6 inches per hour. Compost used should meet Ecology specifications for Grade A quality compost. See http://www.ecy.wa.gov/programs/swfa/compost/
- Fertilize according to the supplier's recommendations.
- Work lime and fertilizer 1 to 2 inches into the soil, and smooth the surface.
- Lay strips of sod beginning at the lowest area to be sodded and perpendicular to the direction of water flow. Wedge strips securely into place. Square the ends of each strip to provide for a close, tight fit. Stagger joints at least 12 inches. Staple on slopes steeper than 3H:1V. Staple the upstream edge of each sod strip.
- Roll the sodded area and irrigate.
- When sodding is carried out in alternating strips or other patterns, seed the areas between the sod immediately after sodding.

3.1.12.4 Maintenance Standards

If the grass is unhealthy, the cause shall be determined and appropriate action taken to reestablish a healthy groundcover. If it is impossible to establish a healthy groundcover due to frequent saturation, instability, or some other cause, the sod shall be removed, the area seeded with an appropriate mix, and protected with a net or blanket.

3.1.13 BMP C125: Compost

3.1.13.1 Purpose

The purpose of compost is to help establish vegetation and filter stormwater thus removing fine sediment and other contaminants. Compost can be used alone as a compost blanket, as a berm, or inside a sock.

3.1.13.2 Conditions of Use

- Do not use if stormwater will discharge to a nutrient sensitive waterbody.
- Do not use as a storm drain inlet protection measure.

3.1.13.3 Design and Installation Specifications

Compost Blankets

Compost blankets are simply compost blanketed over an area.

- Place compost 3" thick.
- Compost can be blown onto slopes up to 2:1 or spread by hand on shallower slopes.
- Compost must be ¾ to 1 inch-minus screened compost meeting Ecology's requirements for Grade A quality compost. See http://www.ecy.wa.gov/programs/swfa/compost for more information on compost quality.
- Compost can be mixed with a seed mix to ensure rapid vegetation.
- Compost does not need to be removed after construction phase unless required by the project engineer or geotechnical professional.

Compost Berms

Compost berms are a perimeter sediment control that can be used instead of silt fence.

- Do not use compost berms on steep slopes.
- Berm width shall be a minimum of 2 feet.
- Berm height shall be a minimum of 12 inches.
- Berm width shall be twice the berm height.

Compost can be blown in place or placed by front-end loader. Compost must be ¾ to 1 inch-minus screened compost meeting Ecology's requirements for Grade A quality compost. See http://www.ecy.wa.gov/programs/swfa/compost for more information on compost quality.

Compost should be spread over proposed landscaped section when construction is complete to aid in revegetation.

Compost Socks

Compost socks are similar to straw wattles.

- Sock material that is biodegradable will last up to 6 months and can be used for soil amendment after 6 months.
- Sock material that is non-biodegradable must be removed after construction is complete.
- Place socks perpendicular to flow.
- Walk socks in place to ensure good soil contact.
- Install wooden stakes every 12” on steep slopes or every 24” on shallow slopes

3.1.13.4 Maintenance Standards

Compost Blankets

- Inspect compost regularly.
- Ensure a 3” thick blanket.

Compost Berms

- Inspect compost berm regularly.
- Ensure vehicular traffic does not cross berm and track compost off-site. If this occurs, sweep compost immediately.

Compost Socks

- Do not allow erosion or concentrated runoff under or around the barrier.
- Inspect the socks after each rainfall and repair any socks that tear or are not abutting the ground.

3.1.14 BMP C126: Topsoiling

3.1.14.1 Purpose

To provide a suitable growth medium for final site stabilization with vegetation. While not a permanent cover practice in itself, topsoiling is an integral component of providing permanent cover in those areas where there is an unsuitable soil surface for plant growth. Native soils and disturbed soils that have been organically amended not only retain much more stormwater, but they also serve as effective biofilters for urban pollutants and, by supporting more vigorous plant growth, reduce the amount of water, fertilizer, and pesticides needed to support installed landscapes. Topsoil does not include any subsoils, only the material from the top several inches, including organic debris.

3.1.14.2 Conditions of Use

Native soils should be left undisturbed to the maximum extent practicable. Native soils disturbed during clearing and grading should be restored, to the maximum extent practicable, to a condition where moisture-holding capacity is equal to or better than the original site conditions. This criterion can be met by using on-site native topsoil, incorporating amendments into on-site soil, or importing blended topsoil.

- Topsoiling is a required procedure when establishing vegetation on shallow soils, and soils of critically low pH (high acid) levels.
- Stripping of the existing, properly functioning soil system and vegetation for the purpose of topsoiling during construction is not acceptable. If an existing soil system is functioning properly, it shall be preserved in its undisturbed and uncompacted condition.
- Depending on where the topsoil comes from, or what vegetation was on site before disturbance, invasive plant seeds may be included and could cause problems for establishing native plants, landscaped areas, or grasses.
- Topsoil from the site will contain mycorrhizal bacteria that are necessary for healthy root growth and nutrient transfer. These native mycorrhiza are acclimated to the site and will provide optimum conditions for establishing grasses. Commercially available mycorrhiza products should be used when topsoil is brought in from off-site.

3.1.14.3 Design and Installation Specifications

If topsoiling is to be done, the following items should be considered:

- Maximize the depth of the topsoil wherever possible to provide the maximum possible infiltration capacity and beneficial growth medium. Topsoil depth shall be at least 8 inches with a minimum organic content of 10 percent dry weight and pH between 6.0 and 8.0 or matching the pH of the undisturbed soil. This can be accomplished either by returning native topsoil to the site and/or incorporating organic amendments. Organic amendments should be incorporated to a minimum 8-inch depth except where tree roots or other natural features limit the depth of incorporation. Subsoils below the 12-inch depth should be scarified at least 4 inches to avoid stratified layers, where feasible. The decision to either layer topsoil over a

subgrade or incorporate topsoil into the underlying layer may vary depending on the planting specified.

- If blended topsoil is imported, fines should be limited to 25 percent passing through a 200 sieve.
- The final composition and construction of the soil system will result in a natural selection or favoring of certain plant species over time. For example, recent practices have shown that incorporation of topsoil may favor grasses, while layering with mildly acidic, high-carbon amendments may favor more woody vegetation.
- Locate the topsoil stockpile so it meets specifications and does not interfere with work on the site. It may be possible to locate more than one pile in proximity to areas where topsoil will be used.
- Allow sufficient time in scheduling for topsoil to be spread prior to seeding, sodding, or planting.
- Care must be taken not to apply topsoil over subsoil if the two soils have contrasting textures. Sandy topsoil over clayey subsoil is a particularly poor combination, as water creeps along the junction between the soil layers and causes the topsoil to slough.
- If topsoil and subsoil are not properly bonded, water will not infiltrate the soil profile evenly and it will be difficult to establish vegetation. The best method to prevent a lack of bonding is to work the topsoil into the layer below for a depth of at least 6 inches.
- Ripping or re-structuring the subgrade may also provide additional benefits regarding the overall infiltration and interflow dynamics of the soil system.
- Field exploration of the site shall be made to determine if there is surface soil of sufficient quantity and quality to justify stripping. Topsoil shall be friable and loamy (loam, sandy loam, silt loam, sandy clay loam, clay loam). Areas of natural groundwater recharge should be avoided.
- Confine stripping to the immediate construction area. A 4- to 6- inch stripping depth is common, but depth may vary depending on the particular soil. Place all surface runoff control structures in place prior to stripping.

Stockpile topsoil in the following manner:

- Side slopes of the stockpile shall not exceed 2:1.
- Surround all topsoil stockpiles between October 1 and April 30 with an interceptor dike with gravel outlet and silt fence. Between May 1 and September 30, install an interceptor dike with gravel outlet and silt fence if the stockpile will remain in place for a longer period of time than active construction grading.
- Complete erosion control seeding or covering with clear plastic or other mulching materials of stockpiles within 2 days (October 1 through April 30) or 7 days (May 1 through September 30) of the formation of the stockpile. Do not cover native topsoil stockpiles with plastic.

- Topsoil shall not be placed while in a frozen or muddy condition, when the subgrade is excessively wet, or when conditions exist that may otherwise be detrimental to proper grading or proposed sodding or seeding.
- Maintain previously established grades on the areas to be topsoiled according to the approved plan.
- When native topsoil is to be stockpiled and reused, the following should apply to ensure that the mycorrhizal bacterial, earthworms, and other beneficial organisms will not be destroyed:
  - Topsoil is to be re-installed within 4 to 6 weeks;
  - Topsoil is not to become saturated with water;
  - Plastic cover is not allowed.

3.1.14.4 Maintenance Standards

Inspect stockpiles regularly, especially after large storm events. Stabilize any areas that have eroded.

3.1.15 BMP C127: Polyacrylamide for Soil Erosion Protection

3.1.15.1 Purpose

Polyacrylamide (PAM) is used on construction sites to prevent soil erosion.

Applying PAM to bare soil in advance of a rain event significantly reduces erosion and controls sediment in two ways. PAM helps maintain soil structure, which increases the ability to infiltrate.

3.1.15.2 Conditions of Use

Do not apply PAM directly to water or allow it to enter a water body. In areas that drain to a sediment pond, PAM can be applied to bare soil under the following conditions:

- During rough grading operations.
- Staging areas.
- Balanced cut and fill earthwork.
- Haul roads prior to placement of crushed rock surfacing.
- Compacted soil roadbase.
- Stockpiles.
- After final grade and before paving or final seeding and planting.
- Pit sites.
- Sites having a winter shut down. In the case of winter shut down, or where soil will remain unworked for several months, PAM should be used together with mulch.

3.1.15.3 Design and Installation Specifications

PAM may be applied in dissolved form with water, or it may be applied in dry, granular or powdered form. The preferred application method is the dissolved form.

PAM is to be applied at a maximum rate of 2/3 pound PAM per 1,000 gallons water (80 mg/L) per 1 acre of bare soil. Higher concentrations of PAM **do not** provide any additional effectiveness.

The Preferred Method:

- Pre-measure the area where PAM is to be applied and calculate the amount of product and water necessary to provide coverage at the specified application rate (2/3 pound PAM per 1,000 gallons per acre).
- PAM has infinite solubility in water, but dissolves very slowly. Dissolve pre-measured dry granular PAM with a known quantity of clean water in a bucket several hours or overnight. Mechanical mixing will help dissolve the PAM. Always add PAM to water - not water to PAM.
- Pre-fill the water truck about 1/8 full with water. The water does not have to be potable, but it must have relatively low turbidity – in the range of 20 NTU or less.
- Add PAM and water mixture to the truck.

- Completely fill the water truck to specified volume.
- Spray PAM and water mixture onto dry soil until the soil surface is uniformly and completely wetted.

An Alternate Method:

PAM may also be applied as a powder at the rate of 5 pounds per acre. This must be applied on a day that is dry. For areas less than 5 to 10 acres, a hand-held "organ grinder" fertilizer spreader set to the smallest setting will work. Tractor-mounted spreaders will work for larger areas.

Benefits and Limitations:

The following benefits and limitations should be considered:

- PAM shall be used in conjunction with other BMPs and not in place of other BMPs.
- The steeper the slope, the less benefit PAM will provide and the more critical it is to use proper groundcover for erosion control.
- Do not use PAM on a slope that flows directly into a stream or wetland or any other waterbody.
- PAM has little to no effect on sandy soils with little clay content.
- Do not add PAM to water discharging from site.
- When the total drainage area is greater than or equal to 5 acres, PAM treated areas shall drain to a sediment pond.
- Areas less than 5 acres shall drain to sediment control BMPs, such as a minimum of 3 check dams per acre. The total number of check dams used shall be maximized to achieve the greatest amount of settlement of sediment prior to discharging from the site. Each check dam shall be spaced evenly in the drainage channel through which stormwater flows are discharged off-site.
- On all sites, use silt fences to limit the discharges of sediment from the site.
- Cover and protect all areas not being actively worked from rainfall. PAM shall not be the only cover BMP used.
- PAM can be applied to wet soil, but dry soil is preferred due to less sediment loss.
- PAM will work when applied to saturated soil but is not as effective as applications to dry or damp soil.
- Keep the granular PAM supply out of the sun. Granular PAM loses its effectiveness in three months after exposure to sunlight and air.
- Proper application and re-application plans are necessary to ensure total effectiveness of PAM usage.
- PAM, combined with water, is very slippery and can be a safety hazard. Care must be taken to prevent spills of PAM powder onto paved surfaces. During an application of PAM, prevent over-spray from reaching pavement, as pavement will become

slippery. If PAM powder gets on skin or clothing, wipe it off with a rough towel rather than washing with water, which makes cleanup messier and take longer.

- Some PAMs are more toxic and carcinogenic than others. Only the most environmentally safe PAM products should be used.
- The specific PAM copolymer formulation must be anionic. **Cationic PAM shall not be used in any application because of known aquatic toxicity problems.** Only the highest drinking water grade PAM, certified for compliance with ANSI/NSF Standard 60 for drinking water treatment, will be used for soil applications. PAM use shall be reviewed and approved by the City. The Washington State Department of Transportation (WSDOT) has listed approved PAM products on its web page.
- PAM designated for these uses should be "water soluble", "linear", or "non-crosslinked". Cross-linked or water absorbent PAM, polymerized in highly acidic (pH<2) conditions, are used to maintain soil moisture content.
- The PAM anionic charge density may vary from 2 to 30 percent; a value of 18 percent is typical. Studies conducted by the United States Department of Agriculture (USDA)/ARS demonstrated that soil stabilization was optimized by using very high molecular weight (12-15 mg/mole), highly anionic (>20% hydrolysis) PAM.
- PAM tackifiers are available and being used in place of guar and alpha plantago. Typically, PAM tackifiers should be used at a rate of no more than 0.5 to 1 pounds per 1,000 gallons of water in a hydromulch machine. Some tackifier product instructions say to use at a rate of 3 to 5 pounds per acre, which can be too much. In addition, pump problems can occur at higher rates due to increased viscosity.

3.1.15.4 Maintenance Standards

- PAM may be reapplied on actively worked areas after a 48-hour period.
- Reapplication is not required unless PAM treated soil is disturbed or turbidity levels show the need for an additional application. If PAM treated soil is left undisturbed, a reapplication may be necessary after two months. When PAM is applied first to bare soil and then covered with straw, a reapplication may not be necessary for several months.
- Loss of sediment and PAM may be a basis for penalties per RCW 90.48.080.

3.1.16 BMP C130: Surface Roughening

3.1.16.1 Purpose

Surface roughening aids in the establishment of vegetative cover, reduces runoff velocity, increases infiltration, and provides for sediment trapping through the provision of a rough soil surface. Horizontal depressions are created by operating a tiller or other suitable equipment on the contour or by leaving slopes in a roughened condition by not fine grading them.

3.1.16.2 Conditions for Use

All slopes steeper than 3H:1V and greater than 5 vertical feet require surface roughening.

- Areas with grades steeper than 3H:1V should be roughened to a depth of 2 to 4 inches prior to seeding.
- Areas that will not be stabilized immediately may be roughened to reduce runoff velocity until seeding takes place.
- Slopes with a stable rock face do not require roughening.
- Slopes where mowing is planned should not be excessively roughened.

3.1.16.3 Design and Installation Specifications

There are different methods for achieving a roughened soil surface on a slope, and the selection of an appropriate method depends upon the type of slope. Roughening methods include stair-step grading, grooving, contour furrows, and tracking. See Figure II-3-8 for tracking and contour furrows. Factors to be considered in choosing a method are slope steepness, mowing requirements, and whether the slope is formed by cutting or filling.

- Graded areas with slopes greater than 3:1 but less than 2:1 should be roughened before seeding. This can be accomplished in a variety of ways, including "track walking," or driving a crawler tractor up and down the slope, leaving a pattern of cleat imprints parallel to slope contours.
- Tracking is done by operating equipment up and down the slope to leave horizontal depressions in the soil.

3.1.16.4 Maintenance Standards

- Areas that are graded in this manner should be seeded as quickly as possible.
- Regular inspections should be made of the area. If rills appear, they should be re-graded and re-seeded immediately.

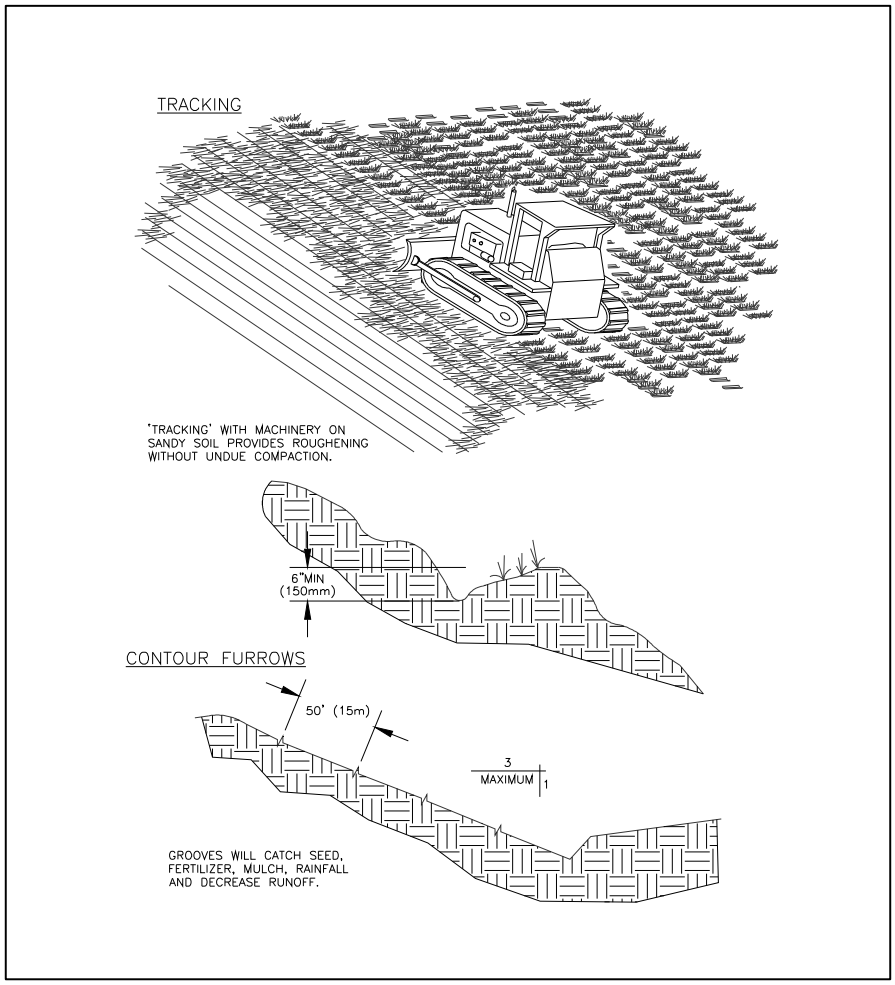

Figure II-3-8. Surface Roughening by Tracking and Contour Furrows

3.1.17 BMP C131: Gradient Terraces

3.1.17.1 Purpose

Gradient terraces reduce erosion damage by intercepting surface runoff and conducting it to a stable outlet at a non-erosive velocity.

3.1.17.2 Conditions of Use

Gradient terraces normally are limited to denuded land having a water erosion problem. They should not be constructed on deep sands or on soils that are too stony, steep, or shallow to permit practical and economical installation and maintenance. Gradient terraces may be used only where suitable outlets are or will be made available. See Figure II-3-9 for gradient terraces.

3.1.17.3 Design and Installation Specifications

The maximum spacing of gradient terraces should be determined by the following method:

$$VI = (0.8)s + y$$

Where:

VI = vertical interval in feet
s = land rise per 100 feet, expressed in feet
y = a soil and cover variable with values from 1.0 to 4.0

Values of "y" are influenced by soil erodibility and cover practices. The lower values are applicable to erosive soils where little to no residue is left on the surface. The higher value is applicable only to erosion-resistant soils where a large amount of residue (1½ tons of straw/acre equivalent) is on the surface.

- The minimum constructed cross-section should meet the design dimensions.
- The top of the constructed ridge should not be lower at any point than the design elevation plus the specified overfill for settlement. The opening at the outlet end of the terrace should have a cross section equal to that specified for the terrace channel.
- Channel grades may be either uniform or variable with a maximum grade of 0.6 feet per 100 feet length. For short distances, terrace grades may be increased to improve alignment. The channel velocity should not exceed that which is non-erosive for the soil type with the planned treatment.
- All gradient terraces should have adequate outlets. Such an outlet may be a grassed waterway, vegetated area, or tile outlet. In all cases, the outlet must convey runoff from the terrace or terrace system to a point where the outflow will not cause damage. Vegetative cover should be used in the outlet channel.
- The design elevation of the water surface of the terrace should not be lower than the design elevation of the water surface in the outlet at their junction, when both are operating at design flow.

- Vertical spacing determined by the above methods may be increased as much as 0.5 feet or 10 percent, whichever is greater, to provide better alignment or location, avoid obstacles, adjust for equipment size, or reach a satisfactory outlet.
- The drainage area above the top should not exceed the area that would be drained by a terrace with normal spacing.
- The terrace should have enough capacity to handle the peak runoff expected from a 2-year, 24-hour design storm without overtopping.
- The terrace cross-section should be proportioned to fit the land slope. The ridge height should include a reasonable settlement factor. The ridge should have a minimum top width of 3 feet at the design height. The minimum cross-sectional area of the terrace channel should be 8 square feet for land slopes of 5 percent or less, 7 square feet for slopes from 5 to 8 percent, and 6 square feet for slopes steeper than 8 percent. The terrace can be constructed wide enough to be maintained using a small cat.

3.1.17.4 Maintenance Standards

Maintenance should be performed as needed. Terraces should be inspected regularly, at least once a year, and after large storm events.

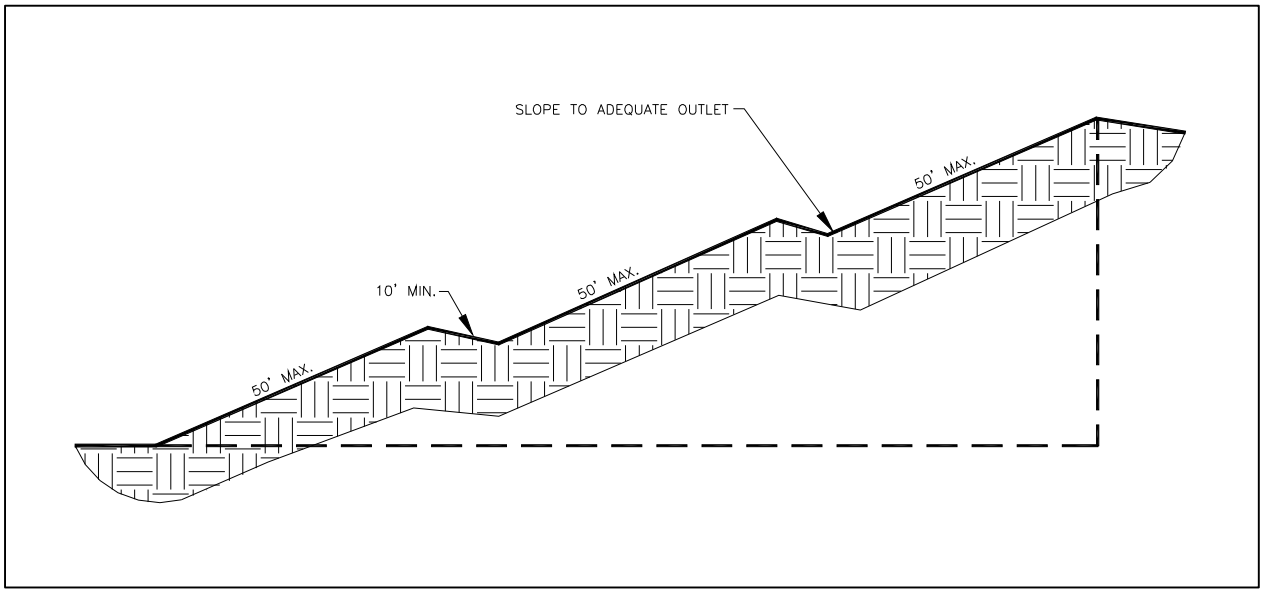

Figure II-3-9. Gradient Terraces

3.1.18 BMP C140: Dust Control

3.1.18.1 Purpose

Dust control prevents wind transport of dust from disturbed soil surfaces onto roadways, drainage ways, and surface waters.

3.1.18.2 Conditions of Use

Use dust control practices in areas (including roadways) subject to surface and air movement of dust where on-site and off-site impacts to roadways, drainage ways, or surface waters are likely.

3.1.18.3 Design and Installation Specifications

- Vegetate or mulch areas that will not receive vehicle traffic. In areas where planting, mulching, or paving is impractical, apply gravel or landscaping rock.
- Limit dust generation by clearing only to those areas where immediate activity will take place, leaving the remaining area(s) in the original condition, if stable. Maintain the original ground cover as long as practical.
- Construct natural or artificial windbreaks or windscreens. These may be designed as enclosures for small dust sources.
- Sprinkle the site with water until surface is wet. Repeat as needed. To prevent carryout of mud onto street, refer to Stabilized Construction Entrance (BMP C105).
- Irrigation water can be used for dust control. Install irrigation systems as a first step on sites where dust control is a concern.
- Spray exposed soil areas with a dust palliative, following the manufacturer's instructions and cautions regarding handling and application. Used oil is prohibited from use as a dust suppressant. The City may approve other dust palliatives such as calcium chloride or PAM.
- PAM (BMP C127) added to water at a rate of 2/3 pounds per 1,000 gallons of water per acre and applied from a water truck is more effective than water alone. This is due to the increased infiltration of water into the soil and reduced evaporation. In addition, small soil particles are bonded together and are not as easily transported by wind. Adding PAM may actually reduce the quantity of water needed for dust control. There are concerns with the proper use of PAM, refer to BMP C127 for more information on PAM application. PAM use requires City approval.
- Lower speed limits. High vehicle speed increases the amount of dust stirred up from unpaved roads and lots.
- Upgrade the road surface strength by improving particle size, shape, and mineral types that make up the surface and base materials.
- Add surface gravel to reduce the source of dust emission. Limit the amount of fine particles to 10 to 20 percent.
- Use geotextile fabrics to increase the strength of new roads or roads undergoing reconstruction.

- Encourage the use of alternate, paved routes, if available.
- Restrict use by tracked vehicles and heavy trucks to prevent damage to road surfaces and bases.
- Apply chemical dust suppressants using the admix method, blending the product with the top few inches of surface material. Suppressants may also be applied as surface treatments.
- Pave unpaved permanent roads and other trafficked areas.
- Use vacuum street sweepers.
- Remove mud and other dirt promptly so it does not dry and then turn into dust.
- Limit dust-causing work on windy days.
- Contact the Puget Sound Clean Air Agency for guidance and training on other dust control measures. Compliance with the Puget Sound Clean Air Agency's recommendations/requirements constitutes compliance with this BMP.

3.1.18.4 Maintenance Standards

Evaluate the potential for dust generation frequently during dry periods. Complete the actions outlines above as needed to limit the dust.

3.1.19 BMP C150: Materials On Hand

3.1.19.1 Purpose

Quantities of erosion prevention and sediment control materials should be kept on the project site at all times to be used for emergency situations such as unexpected heavy summer rains. Having these materials on-site reduces the time needed to implement BMPs when inspections indicate that existing BMPs are not meeting the Construction SWPPP requirements. In addition, it may be more economical to buy some materials in bulk and store them at the office or yard for future use.

3.1.19.2 Conditions of Use

Construction projects of any size or type can benefit from having materials on hand. A small commercial development project could have a roll of plastic and some gravel available for immediate protection of bare soil and temporary berm construction. A large earthwork project, such as highway construction, might have several tons of straw, several rolls of plastic, flexible pipe, sandbags, geotextile fabric, and steel "T" posts.

- Materials are stockpiled and readily available before any site clearing, grubbing, or earthwork begins. A large contractor or developer could keep a stockpile of materials that are available to be used on several projects.
- If storage space at the project site is at a premium, the contractor could maintain the materials at their office or yard. The office or yard must be less than an hour from the project site.

3.1.19.3 Design and Installation Specifications

Depending on project type, size, complexity, and length, materials and quantities will vary. Table II-3-8 provides a good minimum that will cover numerous situations.

Table II-3-8. Materials on Hand

Material	Measure	Quantity
Clear Plastic, 6 mil	100 foot roll	1-2
Drainpipe, 6 or 8 inch diameter	25 foot section	4-6
Sandbags, filled	each	25-50
Straw Bales for mulching,	approx. 50# each	10-20
Quarry Spalls	ton	2-4
Washed Gravel	cubic yard	2-4
Geotextile Fabric	100 foot roll	1-2
Catch Basin Inserts	each	2-4
Steel "T" Posts	each	12-24

3.1.19.4 Maintenance Standards

- All materials with the exception of the quarry spalls, steel "T" posts, and gravel should be kept covered and out of both sun and rain.
- Re-stock materials used as needed.

3.1.20 BMP C151: Concrete Handling

3.1.20.1 Purpose

Concrete work can generate process water and slurry that contain fine particles and high pH, both of which can violate water quality standards in the receiving water. This BMP is intended to minimize and eliminate concrete process water and slurry from entering waters of the state.

3.1.20.2 Conditions of Use

Utilize these management practices any time concrete is used.

Concrete construction projects include, but are not limited to, the following:

- Curbs
- Sidewalks
- Roads
- Bridges
- Foundations
- Floors
- Runways

3.1.20.3 Design and Installation Specifications

- Concrete truck chutes, pumps, and internals shall be washed out only into formed areas awaiting installation of concrete or asphalt.
- When no formed areas are available, contain washwater and leftover product in a lined container. Dispose of washwater in a manner that does not violate groundwater or surface water quality standards.
- Unused concrete remaining in the truck and pump shall be returned to the originating batch plant for recycling.
- Hand tools including, but not limited to, screeds, shovels, rakes, floats, and trowels shall be washed off only into formed areas awaiting installation of concrete or asphalt.
- Equipment that cannot be easily moved, such as concrete pavers, shall only be washed in areas that do not directly drain to natural or constructed stormwater conveyances.
- Washdown from areas such as concrete aggregate driveways shall not drain directly to natural or constructed stormwater conveyances.

3.1.20.4 Maintenance Standards

Containers shall be checked for holes in the liner daily during concrete pours and repaired the same day.

3.1.21 BMP C152: Sawcutting and Surfacing Pollution Prevention

3.1.21.1 Purpose

Sawcutting and surfacing operations generate slurry and process water that contains fine particles and high pH (concrete cutting), both of which can violate water quality standards in the receiving water. This BMP is intended to minimize and eliminate process water and slurry from entering waters of the State

3.1.21.2 Conditions of Use

Anytime sawcutting or surfacing operations take place, use these management practices. Sawcutting and surfacing operations include, but are not limited to, the following:

- Sawing
- Coring
- Grinding
- Roughening
- Hydro-demolition
- Bridge and road surfacing

3.1.21.3 Design and Installation Specifications

- Vacuum slurry and cuttings during cutting and surfacing operations.
- Do not leave slurry and cuttings on permanent concrete or asphalt pavement overnight.
- Do not drain slurry and cuttings to any natural or constructed drainage conveyance.
- Dispose of collected slurry and cuttings in a manner that does not violate groundwater or surface water quality standards.
- Do not drain process water that is generated during hydro-demolition, surface roughening, or similar operations to any natural or constructed drainage conveyance and dispose of it in a manner that does not violate groundwater or surface water quality standards.
- Handle and dispose of cleaning waste material and demolition debris in a manner that does not cause contamination of water. If the area is swept with a pick-up sweeper, haul the material out of the area to an appropriate disposal site.

3.1.21.4 Maintenance Standards

Continually monitor operations to determine whether slurry, cuttings, or process water could enter waters of the state. If inspections show that a violation of water quality standards could occur, stop operations and immediately implement preventive measures such as berms, barriers, secondary containment, and vacuum trucks.

3.1.22 BMP C153: Material Delivery, Storage and Containment

3.1.22.1 Purpose

Prevent, reduce, or eliminate the discharge of pollutants from material delivery and storage to the stormwater system or watercourses by minimizing the storage of hazardous materials onsite, storing materials in a designated area, and installing secondary containment.

3.1.22.2 Conditions of Use

These procedures are suitable for use at all construction sites with delivery and storage of the following materials:

- Petroleum products such as fuel, oil, and grease
- Soil stabilizers and binders (e.g. Polyacrylamide)
- Fertilizers, pesticides, and herbicides
- Detergents
- Asphalt and concrete compounds
- Hazardous chemicals such as acids, lime, adhesives, paints, solvents, and curing compounds
- Any other material that may be detrimental if released to the environment

3.1.22.3 Design and Installation Specifications

The following steps should be taken to minimize risk:

- Locate temporary storage area away from vehicular traffic, near the construction entrance(s), and away from waterways or storm drains.
- Supply Material Safety Data Sheets (MSDS) for all materials stored. Keep chemicals in their original labeled containers.
- Surrounding materials with earth berms is an option for temporary secondary containment.
- Minimize hazardous material storage on-site.
- Handle hazardous materials as infrequently as possible.
- During the wet weather season (October 1 through April 30), consider storing materials in a covered area.
- Store materials in secondary containment, such as an earthen dike, a horse trough, or a children's wading pool for non-reactive materials such as detergents, oil, grease, and paints. "Bus boy" trays or concrete mixing trays may be used as secondary containment for small amounts of material.
- Do not store chemicals, drums, or bagged materials directly on the ground. Place these items on a pallet and, when possible, in secondary containment.
- If drums cannot be stored under a roof, domed plastic covers are inexpensive and snap to the top of drums, preventing water from collecting.

3.1.22.4 Material Storage Areas and Secondary Containment Practices:

- Store liquids, petroleum products, and substances listed in 40 CFR Parts 110, 117, or 302 in approved containers and drums and do not overfill the containers or drums. Store containers and drums in temporary secondary containment facilities.
- Temporary secondary containment facilities shall provide for a spill containment volume able to contain precipitation from a 25 year, 24 hour storm event plus 10% of the total enclosed container volume of all containers, or 110% of the capacity of the largest container within its boundary, whichever is greater.
- Secondary containment facilities shall be impervious to the materials stored therein for a minimum contact time of 72 hours.
- Secondary containment facilities shall be maintained free of accumulated rainwater and spills. In the event of spills or leaks, collect accumulated rainwater and spills and place into drums. Handle these liquids as hazardous waste unless testing determines them to be non-hazardous.
- Provide sufficient separation between stored containers to allow for spill cleanup and emergency response access.
- During the wet weather season (October 1 through April 30), cover each secondary containment facility during non-working days, prior to and during rain events.
- Keep material storage areas clean, organized, and equipped with an ample supply of appropriate spill clean-up material.
- The spill kit should include, at a minimum:
    - 1 water resistant nylon bag
    - 3 oil absorbent socks (3-inches by 4-feet)
    - 2 oil absorbent socks (3-inches by 10-feet)
    - 12 oil absorbent pads (17-inches by 19-inches)
    - 1 pair splash resistant goggles
    - 3 pairs nitrile gloves
    - 10 disposable bags with ties
    - Instructions

3.1.23 BMP C154: Concrete Washout Area

3.1.23.1 Purpose

Prevent or reduce the discharge of pollutants to stormwater from concrete waste by conducting washout offsite, or performing onsite washout in a designated area to prevent pollutants from entering surface waters or groundwater.

3.1.23.2 Conditions of Use

Use concrete washout best management practices on construction projects where:

- Concrete is used as a construction material.
- It is not possible to dispose of all concrete wastewater and washout offsite (ready mix plant, etc.)
- Concrete trucks, pumpers, or other concrete coated equipment are washed onsite.

NOTE: If less than 3 concrete trucks or pumpers need to be washed on-site, the washwater may be disposed of in a formed area awaiting concrete or an upland disposal area where it cannot contaminate surface or groundwater. The upland disposal area must be at least 50 feet from sensitive areas such as storm drains, open ditches, or waterbodies, including wetlands. Do not allow dirty water to enter storm drains, open ditches, or any waterbody.

3.1.23.3 Implementation

The following steps will help reduce stormwater pollution from concrete wastes:

- Perform washout of concrete trucks offsite or in designated concrete washout areas only.
- Do not wash out concrete trucks onto the ground, or into storm drains, open ditches, streets, or streams.
- Do not allow excess concrete to be dumped onsite, except in designated concrete washout areas.
- Concrete washout areas may be prefabricated concrete washout containers, or self-installed structures (above-grade or below-grade).
    - Prefabricated containers are most resistant to damage and protect against spills and leaks. Companies may offer delivery service and provide regular maintenance and disposal of solid and liquid waste.
    - If self-installed concrete washout areas are used, below-grade structures are preferred over above-grade structures because they are less prone to spills and leaks.
    - Self-installed above-grade structures should only be used if excavation is not practical.

3.1.23.4 Education

- Discuss the concrete management techniques described in this BMP with the ready-mix concrete supplier before any deliveries are made.
- Educate employees and subcontractors on the concrete waste management techniques described in this BMP.
- Arrange for contractor's superintendent or Certified Erosion and Sediment Control Lead (CESCL) to oversee and enforce concrete waste management procedures.
- Install a sign adjacent to each temporary concrete washout facility to inform concrete equipment operators to utilize the proper facilities.

3.1.23.5 Contracts

Incorporate requirements for concrete waste management into concrete supplier and subcontractor agreements.

3.1.23.6 Location and Placement Considerations:

- Locate washout area at least 50 feet from sensitive areas such as storm drains, open ditches, or water bodies, including wetlands.
- Allow convenient access for concrete trucks, preferably near the area where the concrete is being poured.
- If trucks need to leave a paved area to access washout, prevent track-out with a pad of rock or quarry spalls (BMP C105). These areas should be far enough away from other construction traffic to reduce the likelihood of accidental damage and spills.
- The number of facilities you install should depend on the expected demand for storage capacity.
- On large sites with extensive concrete work, washouts should be placed in multiple locations for ease of use by concrete truck drivers.

3.1.23.7 Onsite Temporary Concrete Washout Facility, Transit Truck Washout Procedures:

- Locate temporary concrete washout facilities a minimum of 50 ft from sensitive areas including storm drain inlets, open drainage facilities, and watercourses.
- Construct and maintain concrete washout facilities in order to contain all liquid and concrete waste generated by washout operations.
    - Approximately 7 gallons of wash water are used to wash one truck chute.
    - Approximately 50 gallons are used to wash out the hopper of a concrete pump truck.
- Washout of concrete trucks shall be performed in designated areas only.
- Concrete washout from concrete pumper bins can be washed into concrete pumper trucks and discharged into designated washout area or properly disposed of offsite.

- Once concrete wastes are washed into the designated area and allowed to harden, the concrete should be broken up, removed, and disposed of per applicable solid waste regulations. Dispose of hardened concrete on a regular basis.

Temporary Above-Grade Concrete Washout Facility

- Temporary concrete washout facility (type above grade) should be constructed as shown on the details at the end of this BMP, with a recommended minimum length and minimum width of 10 ft, but with sufficient quantity and volume to contain all liquid and concrete waste generated by washout operations.
- Plastic lining material should be a minimum of 10 mil polyethylene sheeting and should be free of holes, tears, or other defects that compromise the impermeability of the material.

Temporary Below-Grade Concrete Washout Facility

- Temporary concrete washout facilities (type below grade) should be constructed as shown on the details at the end of this BMP, with a recommended minimum length and minimum width of 10 ft. The quantity and volume should be sufficient to contain all liquid and concrete waste generated by washout operations.
- Lath and flagging should be commercial type.
- Plastic lining material shall be a minimum of 10 mil polyethylene sheeting and should be free of holes, tears, or other defects that compromise the impermeability of the material.
- Liner seams shall be installed in accordance with manufacturers' recommendations.
- Soil base shall be prepared free of rocks or other debris that may cause tears or holes in the plastic lining material.

3.1.23.8 Inspection and Maintenance

- Inspect and verify that concrete washout BMPs are in place prior to the commencement of concrete work.
- During periods of concrete work, inspect daily to verify continued performance.
  - Check overall condition and performance.
  - Check remaining capacity (% full).
  - If using self-installed washout facilities, verify plastic liners are intact and sidewalls are not damaged.
  - If using prefabricated containers, check for leaks.

- Maintain washout facilities to provide adequate holding capacity with a minimum freeboard of 12 inches.
- Washout facilities must be cleaned, or new facilities must be constructed and ready for use once the washout is 75% full.

- If the washout is nearing capacity, vacuum and dispose of the waste material in an approved manner.
  - Do not discharge liquid or slurry to waterways, storm drains or directly onto ground.
  - Do not use sanitary sewer without local approval.
  - Place a secure, non-collapsing, non-water collecting cover over the concrete washout facility prior to predicted wet weather to prevent accumulation and overflow of precipitation.
  - Remove and dispose of hardened concrete and return the structure to a functional condition. Concrete may be reused onsite or hauled away for disposal or recycling.
- When you remove materials from the self-installed concrete washout, build a new structure; or, if the previous structure is still intact, inspect for signs of weakening or damage, and make any necessary repairs. Re-line the structure with new plastic after each cleaning.

3.1.23.9 Removal of Temporary Concrete Washout Facilities

- When temporary concrete washout facilities are no longer required for the work, remove and properly dispose of the hardened concrete, slurries and liquids.
- Remove materials used to construct temporary concrete washout facilities from the site of the work and dispose of or recycle it.
- Holes, depressions or other ground disturbance caused by the removal of the temporary concrete washout facilities shall be backfilled, repaired, and stabilized to prevent erosion.

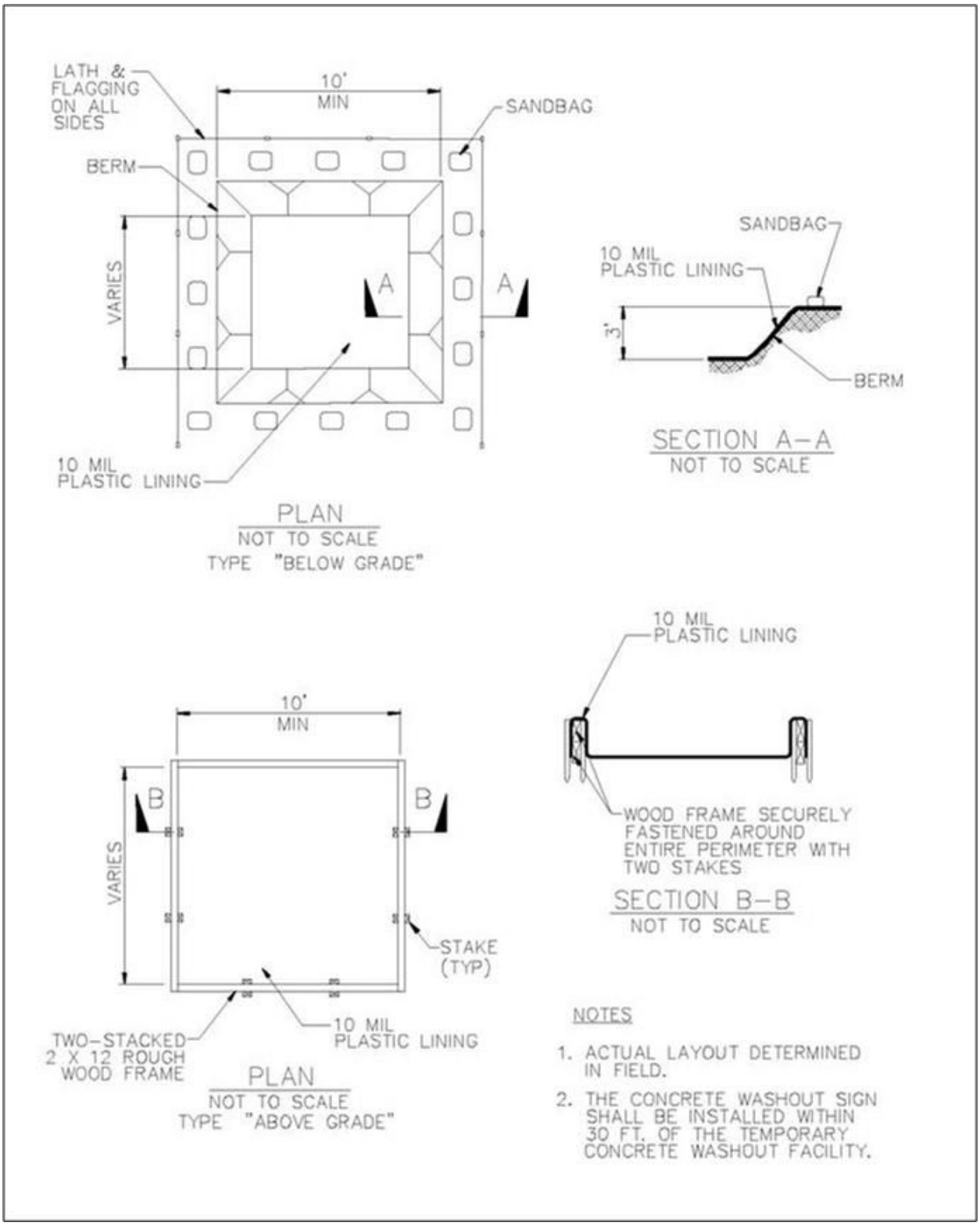

Figure II-3-10. Temporary Concrete Washout Facility

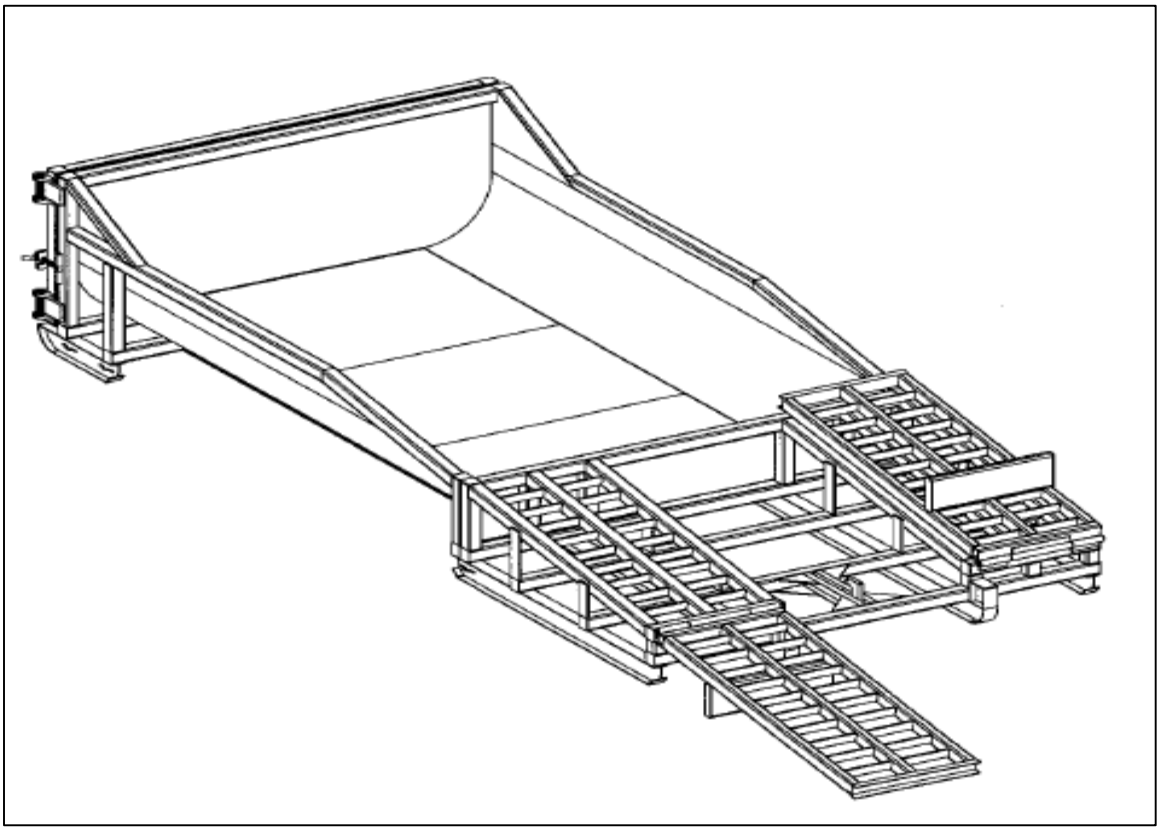

Figure II-3-11. Prefabricated Concrete Washout Container with Ramp

3.1.24 BMP C160: Certified Erosion and Sediment Control Lead

3.1.24.1 Purpose

The project proponent designates at least one person as the responsible representative in charge of erosion and sediment control (ESC) and water quality protection. The designated person shall be the Certified Erosion and Sediment Control Lead (CESCL), who is responsible for ensuring compliance with all local, state, and federal erosion and sediment control and water quality requirements.

3.1.24.2 Conditions of Use

A CESCL should be made available on project types that include, but are not limited to, the following:

- Construction activity that disturbs one acre of land or more.
- Construction activity that disturbs less than one acre of land, but is part of a larger common plan of development or sale that will ultimately disturb one acre of land or more.
- Heavy construction of roads, bridges, highways, airports, buildings.
- Projects near wetlands and sensitive or critical areas.
- Projects in or over water.

3.1.24.3 Specifications

The CESCL shall:

- Have a current certificate proving attendance in an erosion and sediment control training course that meets the minimum ESC training and certification requirements established by Ecology. Ecology will maintain a list of ESC training and certification providers at: www.ecy.wa.gov/programs/wq/stormwater.

  OR

- Be a Certified Professional in Erosion and Sediment Control (CPESC). For additional information go to: www.cpesc.net

The CESCL shall have authority to act on behalf of the contractor or developer and shall be available, on call, 24 hours per day throughout the period of construction.

The Construction SWPPP shall include the name, telephone number, fax number, and address of the designated CESCL.

A CESCL may provide inspection and compliance services for multiple construction projects in the same geographic region.

Duties and responsibilities of the CESCL shall include, but are not limited to, the following:

- Maintaining a permit file on site at all times which includes the SWPPP and any associated permits and plans.
- Directing BMP installation, inspection, maintenance, modification, and removal.

- Updating all project drawings and the Construction SWPPP with changes made.
- Keeping daily logs and inspection reports. Inspection reports should include:
  - Inspection date/time.
  - Weather information, general conditions during inspection, and approximate amount of precipitation since the last inspection.
  - A summary or list of all BMPs implemented, including observations of all erosion/sediment control structures or practices. The following shall be noted:
    - Locations of BMPs inspected,
    - Locations of BMPs that need maintenance,
    - Locations of BMPs that failed to operate as designed or intended, and
    - Locations where additional or different BMPs are required.
  - Visual monitoring results, including a description of discharged stormwater. The presence of suspended sediment, turbid water, discoloration, and oil sheen shall be noted, as applicable.
  - Any water quality monitoring performed during inspection.
  - General comments and notes, including a brief description of any BMP repairs, maintenance, or installations made as a result of the inspection.
- Facilitate, participate in, and take corrective actions resulting from inspections performed by outside agencies or the owner.

3.1.25 BMP C161: Payment of Erosion Control Work

3.1.25.1 Purpose

As with any construction operation, the contractor should be paid for erosion control work. Address payment for erosion control during project development and design. Identify the method of payment in the SWPPP.

3.1.25.2 Conditions of Use

Erosion control work should never be "incidental" to the contract as it is extremely difficult for the contractor to bid the work. Work that is incidental to the contract is work where no separate measurement or payment is made. The cost for incidental work is included in payments made for applicable bid items in the Schedule of Unit Prices. For example, any erosion control work associated with an item called "Clearing and Grubbing" is bid and paid for as part of that item, not separately.

Two effective means for payment of erosion control work are described below. These include:

- TESC-Force Account
- Unit Prices

TESC Force Account

One good method for ensuring that contingency money is available to address unforeseen erosion and sediment control problems is to set up an item called "TESC-Force Account". For example, an amount such as $15,000 is written in both the Unit Price and Amount columns for the item. This requires all bidders to bid $15,000 for the item.

The Force Account is used only at the discretion of the contracting agency or developer. If there are no unforeseen erosion problems, the money is not used. If there are unforeseen erosion problems, the contracting agency would direct the work to be done and pay an agreed upon amount for the work (such as predetermined rates under a Time and Materials setting).

Contract language for this item could look like this:

Measurement and Payment for "TESC-Force Account" will be on a Force Account basis in accordance with_____(include appropriate section of the Contract Specifications). The amount entered in the Schedule of Unit Prices is an estimate.

Unit Prices

When the material or work can be quantified, it can be paid by Unit Prices. For example, the project designer knows that 2 acres will need to be hydroseeded and sets up an Item of Work for Hydroseed, with a Bid Quantity of 2, and a Unit for Acre. The bidder writes in the unit Prices and Amount.

Unit Price items can be used in conjunction with TESC-Force Account and TESC-Lump Sum.

3.1.26 BMP C162: Scheduling

3.1.26.1 Purpose

Sequencing a construction project reduces the amount and duration of soil exposed to erosion by wind, rain, runoff, and vehicle tracking.

3.1.26.2 Conditions of Use

The construction sequence schedule is an orderly listing of all major land-disturbing activities together with the necessary erosion and sedimentation control measures planned for the project. This type of schedule guides the contractor on work to be done before other work is started so serious erosion and sedimentation problems can be avoided.

Following a specified work schedule that coordinates the timing of land-disturbing activities and the installation of control measures is perhaps the most cost-effective way of controlling erosion during construction. The removal of surface ground cover leaves a site vulnerable to accelerated erosion. Construction procedures that limit land clearing, provide timely installation of erosion and sedimentation controls, and restore protective cover quickly can significantly reduce the erosion potential of a site.

3.1.26.3 Design Considerations

- Avoid rainy periods.
- Schedule projects to disturb only small portions of the site at any one time. Complete grading as soon as possible. Immediately stabilize the disturbed portion before grading the next portion. Practice staged seeding in order to revegetate cut and fill slopes as the work progresses.

3.1.27 BMP C180: Small Project Construction Stormwater Pollution Prevention

3.1.27.1 Purpose

To prevent the discharge of sediment and other pollutants to the maximum extent practicable from small construction projects.

3.1.27.2 Conditions of Use

Can be used on small construction projects that:

- Add or replace between 2,000 and 5,000 square feet of impervious surfaces, or
- Clear/disturb between 7,000 square feet and 1 acre of land, or
- Grade/fill less than 500 cubic yards of material.

3.1.27.3 Design and Installation Specifications

- Plan and implement proper clearing and grading of the site. It is most important to clear only the areas needed, thus keeping exposed areas to a minimum. Phase clearing so that only those areas actively being worked are uncovered.

  NOTE: Clearing limits should be flagged in the lot or area prior to initiating clearing.

- Manage soil in a manner that does not permanently compact or deteriorate the final soil and landscape system. If disturbance and/or compaction occur, the impact must be corrected at the end of the construction activity. This shall include restoration of soil depth, soil quality, permeability, and percent organic matter. Construction practices must not cause damage to or compromise the design of permanent landscape or infiltration areas.
- Locate excavated basement soil a reasonable distance behind the curb, such as in the backyard or side yard area. This will increase the distance eroded soil must travel to reach the storm sewer system. Cover soil piles until the soil is either used or removed. Situate piles so sediment does not run into the street or adjoining yards.
- Backfill basement walls as soon as possible and rough grade the lot. This will eliminate large soil mounds, which are highly erodible, and prepares the lot for temporary cover, which will further reduce erosion potential.
- Remove excess soil from the site as soon as possible after backfilling. This will eliminate any sediment loss from surplus fill.
- If a lot has a soil bank higher than the curb, install a trench or berm, moving the bank several feet behind the curb. This will reduce the occurrence of gully and rill erosion while providing a storage and settling area for stormwater.
- Stabilize the construction entrance where traffic will be leaving the construction site and traveling on paved roads or other paved areas within 1,000 feet of the site.

- Provide for periodic street cleaning to remove any sediment that may have been tracked out. Remove sediment by shoveling or sweeping and carefully move it to a suitable disposal area where it will not be re-eroded.
- Backfill utility trenches that run up and down slopes within seven days. Cross-slope trenches may remain open throughout construction to provide runoff interception and sediment trapping, provided that they do not convey turbid runoff off site.

3.2 Runoff, Conveyance and Treatment BMPs

3.2.1 BMP C200: Interceptor Dike and Swale

3.2.1.1 Purpose

Provide a ridge of compacted soil, or a ridge with an upslope swale, at the top or base of a disturbed slope or along the perimeter of a disturbed construction area to convey stormwater. Use the dike and/or swale to intercept the runoff from unprotected areas and direct it to areas where erosion can be controlled. This can prevent storm runoff from entering the work area or sediment-laden runoff from leaving the construction site.

3.2.1.2 Conditions of Use

Where the runoff from an exposed site or disturbed slope must be conveyed to an erosion control facility that can safely convey the stormwater.

- Locate upslope of a construction site to prevent runoff from entering disturbed area.
- When placed horizontally across a disturbed slope, it reduces the amount and velocity of runoff flowing down the slope.
- Locate downslope to collect runoff from a disturbed area and direct it to a sediment basin.

3.2.1.3 Design and Installation Specifications

- Stabilize dike and/or swale and channel with temporary or permanent vegetation or other channel protection during construction.
- Channel requires a positive grade for drainage; steeper grades require channel protection and check dams.
- Review construction for areas where overtopping may occur.
- Can be used at the top of new fill before vegetation is established.
- May be used as a permanent diversion channel to carry the runoff.
- Sub-basin tributary area should be one acre or less.
- Design capacity for the peak flow from a 10-year, 24-hour storm assuming a Type 1A rainfall distribution (3-inches) for temporary facilities. Alternatively, use 1.6 times the 10-year, 1-hour flow indicated by WWHM. Design capacity for the peak flow from a 25-year, 24-hour storm for permanent facilities.

Interceptor Dikes

- Interceptor dikes shall meet the following criteria:

Top Width	2 feet minimum.
Height	1.5 feet minimum on berm.
Side Slope	2:1 or flatter.
Grade	Depends on topography, however, dike system minimum is 0.5% and maximum is 1%
Compaction	Minimum of 90 percent ASTM D698 standard proctor.

- Horizontal Spacing of Interceptor Dikes:

Average Slope	Slope Percent	Flowpath Length
20H:1V or less	3-5%	300 feet
(10 to 20)H:1V	5-10%	200 feet
(4 to 10)H:1V	10-25%	100 feet
(2 to 4)H:1V	25-50%	50 feet

- Stabilization depends on velocity and reach.

Slopes <5%	Seed and mulch applied within 5 days of dike construction (see BMP C121, Mulching).
Slopes 5 - 40%	Dependent on runoff velocities and dike materials. Stabilization should be done immediately using either sod or riprap or other measures to avoid erosion.

- The upslope side of the dike shall provide positive drainage to the dike outlet. No erosion shall occur at the outlet. Provide energy dissipation measures as necessary. Sediment-laden runoff must be released through a sediment trapping facility.
- Minimize construction traffic over temporary dikes. Use temporary cross culverts for channel crossing.

Interceptor Swales

- Interceptor swales shall meet the following criteria:

Bottom Width	2 feet minimum; the bottom shall be level.
Depth	1-foot minimum.
Side Slope	2H:1V or flatter
Grade	Maximum 5 percent, with positive drainage to a suitable outlet (such as a sediment pond).
Stabilization	Seed as per *BMP C120*, *Temporary and Permanent Seeding*, or *BMP C202*, *Channel Lining*, 12 inches thick of riprap pressed into the bank and extending at least 8 inches vertical from the bottom.

- Inspect diversion dikes and interceptor swales once a week and after every rainfall. Immediately remove sediment from the flow area.
- Repair damage caused by construction traffic or other activity before the end of each working day.
- Check outlets and make timely repairs as needed to avoid gully formation. When the area below the temporary diversion dike is permanently stabilized, remove the dike and fill and stabilize the channel to blend with the natural surface.

3.2.2 BMP C201: Grass-Lined Channels

3.2.2.1 Purpose

To provide a channel with a vegetative lining for conveyance of runoff. See Figure II-3-12 for typical grass-lined channels.

3.2.2.2 Conditions of Use

This practice applies to construction sites where concentrated runoff needs to be contained to prevent erosion or flooding.

- When a vegetative lining can provide sufficient stability for the channel cross section and lower velocities of water (normally dependent on grade). This means that the channel slopes are generally less than 5 percent and space is available for a relatively large cross section.
- Typical uses include roadside ditches, channels at property boundaries, outlets for diversions, and other channels and drainage ditches in low areas.
- Channels that will be vegetated should be installed before major earthwork and hydroseeded with a bonded fiber matrix (BFM). The vegetation should be well established (i.e., 75 percent cover) before water is allowed to flow in the ditch. With channels that will have high flows, erosion control blankets should be installed over the hydroseed. If vegetation cannot be established from seed before water is allowed in the ditch, sod should be installed in the bottom of the ditch in lieu of hydromulch and blankets.

3.2.2.3 Design and Installation Specifications

Locate the channel where it can conform to the topography and other features such as roads.

- Locate them to use natural drainage systems to the greatest extent possible.
- Avoid sharp changes in alignment or bends and changes in grade.
- Do not reshape the landscape to fit the drainage channel.
- Base the maximum design velocity on soil conditions, type of vegetation, and method of revegetation, but at no times shall velocity exceed 5 feet/second. The channel shall not be overtopped by the peak runoff from a 10-year, 24–hour storm, assuming a type 1A rainfall distribution (3.0-inches). Alternatively, use 1.6 times the 10-year, 1-hour flow indicated by an approved continuous runoff model to determine a flow rate which the channel must contain.
- An **established** grass or vegetated lining is required before the channel can be used to convey stormwater, unless stabilized with nets or blankets.
- If design velocity of a channel to be vegetated by seeding exceeds 2 ft/sec, a temporary channel liner is required. Geotextile or special mulch protection, such as fiberglass roving or straw and netting, provides stability until the vegetation is fully established. See Figure II-3-13.

- Remove check dams when the grass has matured sufficiently to protect the ditch or swale unless the slope of the swale is greater than 4 percent. Seed and mulch the area beneath the check dams immediately after dam removal.
- If vegetation is established by sodding, the permissible velocity for established vegetation may be used and no temporary liner is needed.
- Do not subject grass-lined channel to sedimentation from disturbed areas. Use sediment-trapping BMPs upstream of the channel.
- **V-shaped grass channels** generally apply where the quantity of water is small, such as in short reaches along roadsides. The V-shaped cross section is least desirable because it is difficult to stabilize the bottom where velocities may be high.
- **Trapezoidal grass channels** are used where runoff volumes are large and slope is low so that velocities are non-erosive to vegetated linings. (Note: it is difficult to construct small parabolic shaped channels.)
- Subsurface drainage, or riprap channel bottoms, may be necessary on sites that are subject to prolonged wet conditions due to long duration flows or a high water table.
- Provide outlet protection at culvert ends and at channel intersections.
- Grass channels, at a minimum, should carry peak runoff for temporary construction drainage facilities from the 10-year, 24-hour storm (3.0 inches) without eroding. Where flood hazard exists, increase the capacity according to the potential damage.
- Grassed channel side slopes generally are constructed 3:1 or flatter to aid in the establishment of vegetation and for maintenance.
- Construct channels a minimum of 0.2 foot larger around the periphery to allow for soil bulking during seedbed preparations and sod buildup.

3.2.2.4 Maintenance Standards

During the establishment period, check grass-lined channels after every rainfall.

- After grass is established, periodically check the channel; check the channel after every heavy rainfall event. Immediately make repairs.
- It is particularly important to check the channel outlet and all road crossings for bank stability and evidence of piping or scour holes.
- Remove all significant sediment accumulations to maintain the designed carrying capacity. Keep the grass in a healthy, vigorous condition at all times, since it is the primary erosion protection for the channel.

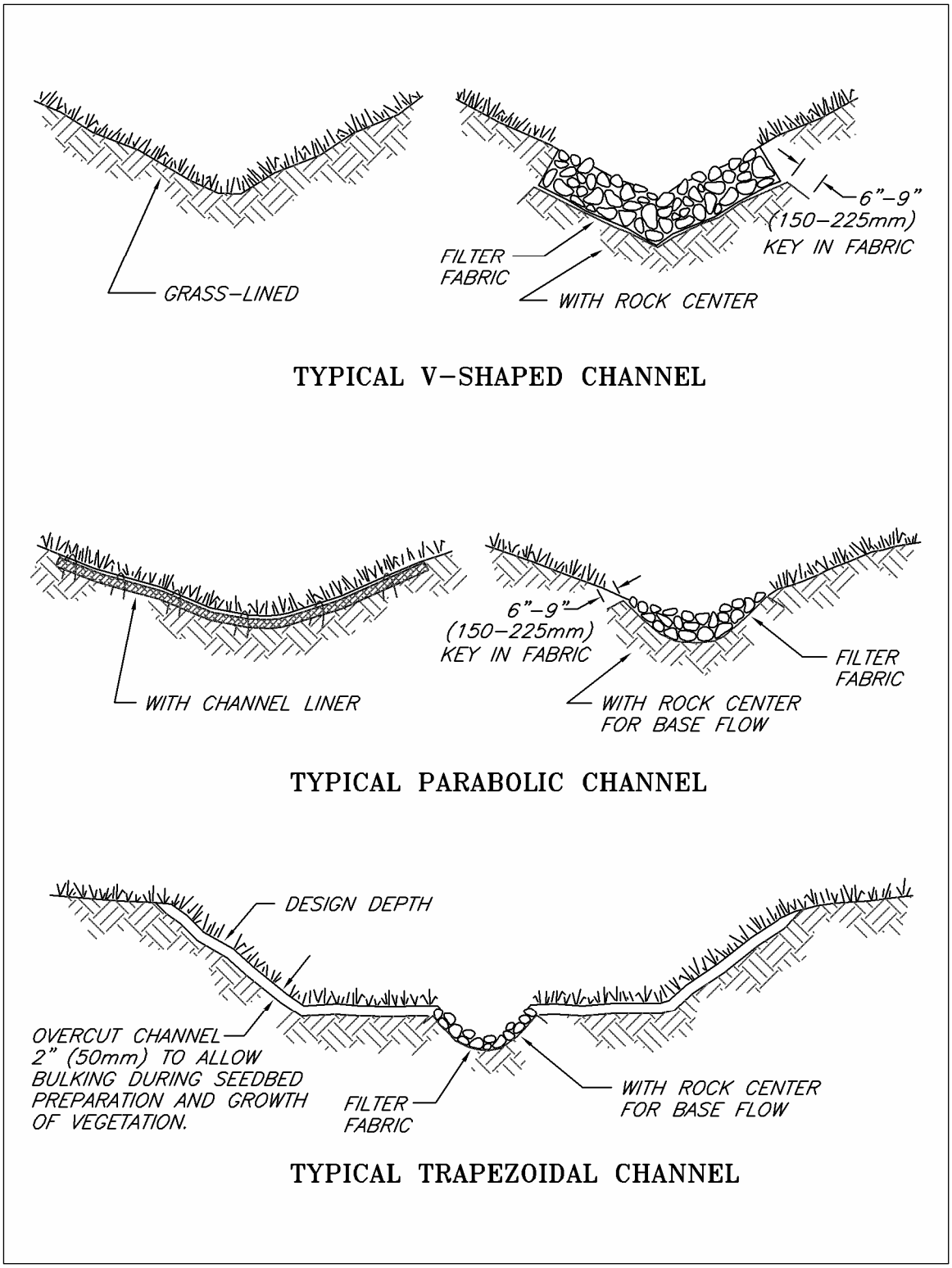

Figure II-3-12. Typical Grass-Lined Channels

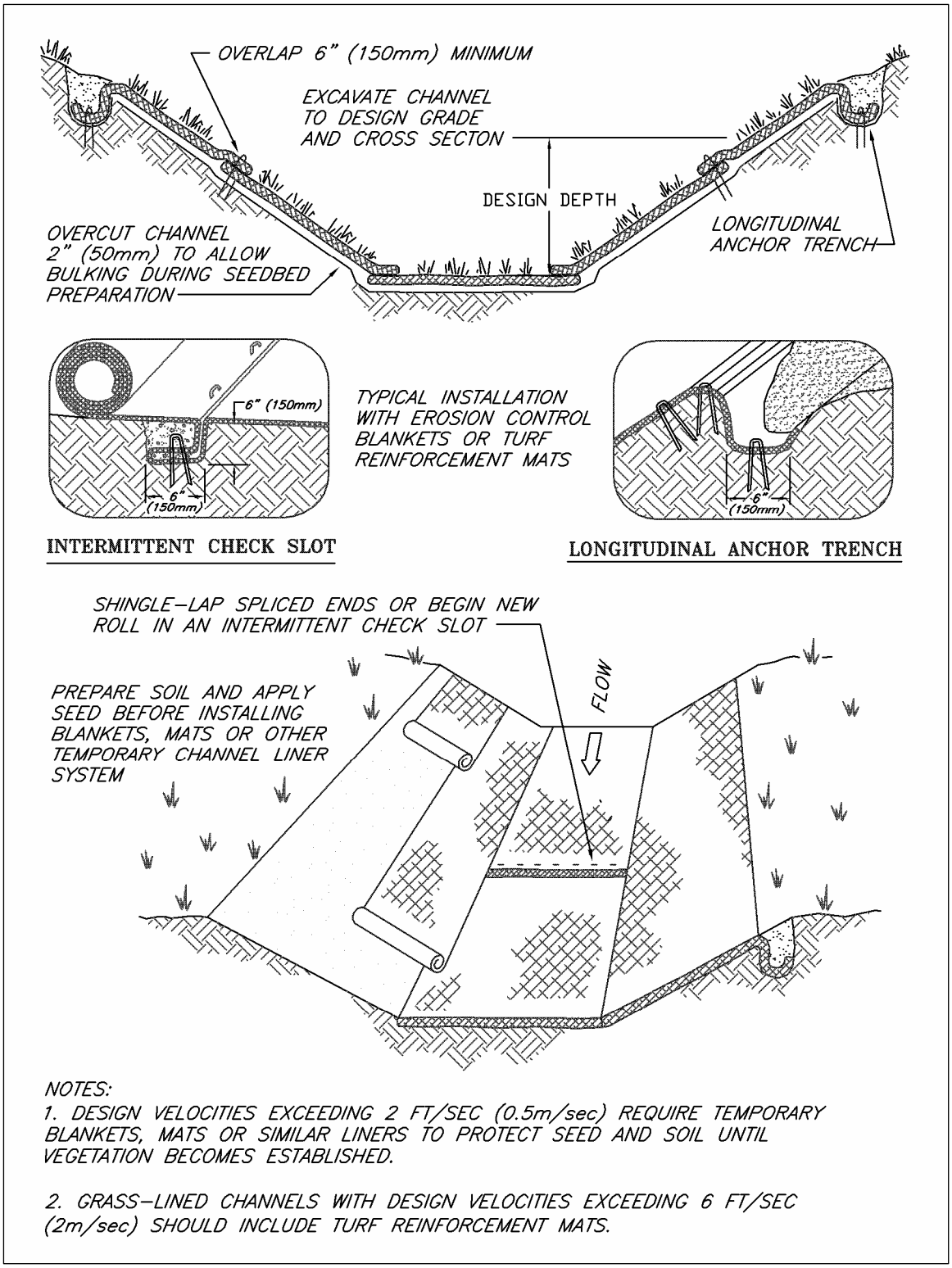

Figure II-3-13. Temporary Channel Liners

3.2.3 BMP C202: Channel Lining

3.2.3.1 Purpose

To protect erodible channels by providing a channel liner using either blankets or riprap.

3.2.3.2 Conditions of Use

- When natural soils or vegetated stabilized soils in a channel are not adequate to prevent channel erosion.
- When a permanent ditch or pipe system is to be installed and a temporary measure is needed.
- In almost all cases, synthetic and organic coconut blankets are more effective than riprap for protecting channels from erosion. Blankets can be used with and without vegetation. Blanketed channels can be designed to handle any expected flow and longevity requirement. Some synthetic blankets have a predicted life span of 50 years or more, even in sunlight.
- The Federal Highway Administration recommends not using flexible liners whenever the slope exceeds 10 percent or the shear stress exceeds 8 pounds per square foot.

3.2.3.3 Design and Installation Specifications

See BMP C122 for information on blankets.

Since riprap is used where erosion potential is high, construction must be sequenced so the riprap is put in place with the minimum possible delay (see Figure II-3-14).

- Only disturb areas where riprap is to be placed if final preparation and placement of the riprap can immediately follow the initial disturbance. Where riprap is used for outlet protection, place the riprap before or in conjunction with the construction of the pipe or channel so it is in place when the pipe or channel begins to operate.
- The designer, after determining the appropriate riprap size for stabilization, shall consider that size to be a minimum size and then, based on riprap gradations actually available in the area, select the size or sizes that equal or exceed the minimum size. Consider the possibility of drainage structure damage by children when selecting a riprap size, especially if there is nearby water or a gully in which to toss the stones.
- Use field stone or quarry stone of approximately rectangular shape for the riprap. The stone shall be hard and angular and of such quality that it will not disintegrate on exposure to water or weathering and shall be suitable in all respects for the purpose intended.
- Rubble concrete may be used, provided it has a density of at least 150 pounds per cubic foot and otherwise meets the requirement of this standard and specification.
- Place a lining of engineering filter fabric (geotextile) between the riprap and the underlying soil surface to prevent soil movement into or through the riprap. The geotextile should be keyed in at the top of the bank.

- Do not use filter fabric on slopes steeper than 1-1/2H:1V as slippage may occur. It should be used in conjunction with a layer of coarse aggregate (granular filter blanket) when the riprap to be placed is 12 inches and larger.

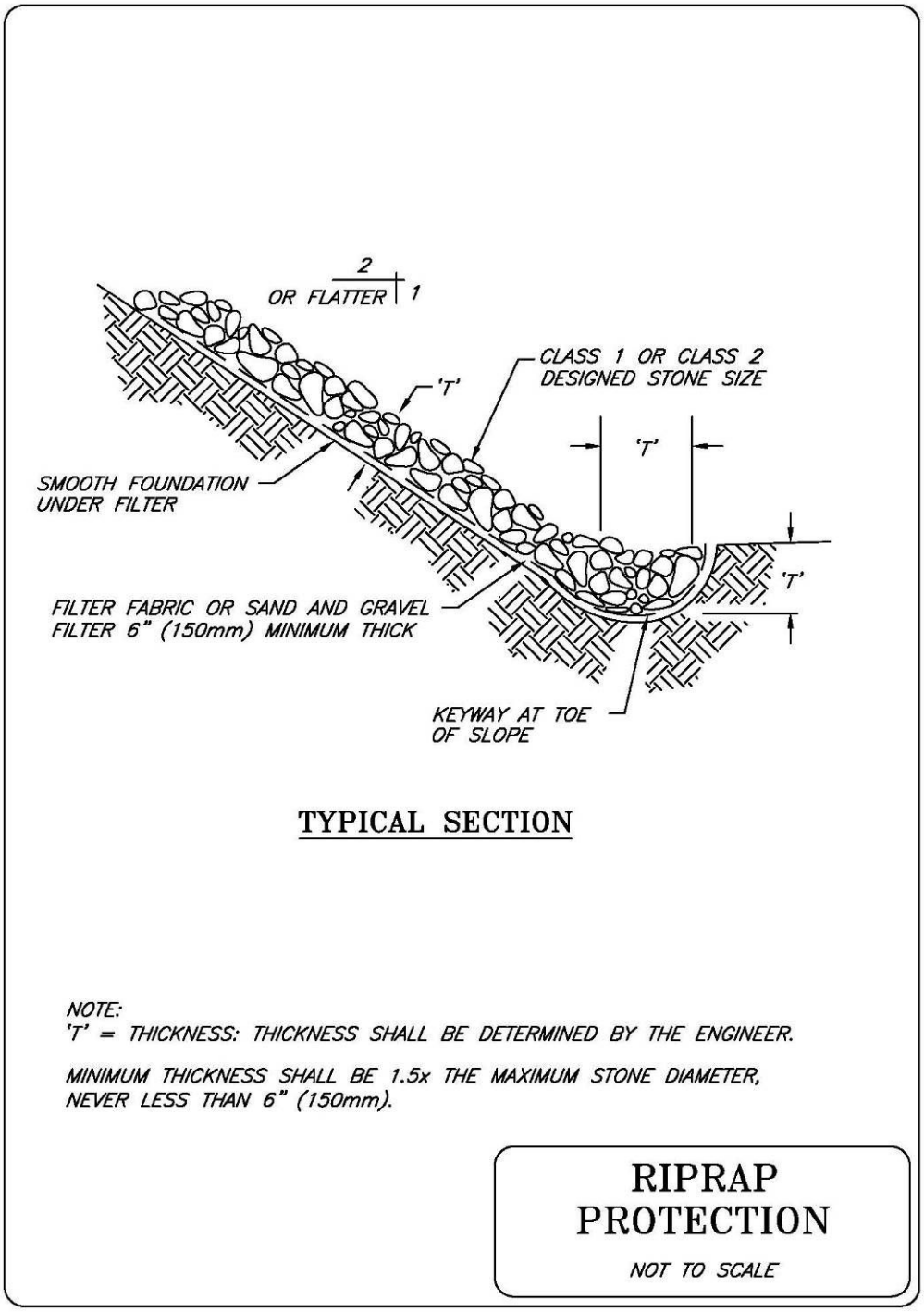

Figure II-3-14. Soil Erosion Protection – Rip Rap Protection

3.2.4 BMP C203: Water Bars

3.2.4.1 Purpose

A small ditch or ridge of material is constructed diagonally across a road or right-of-way to divert stormwater runoff from the road surface, wheel tracks, or a shallow road ditch.

3.2.4.2 Conditions of Use

Clearing right-of-way and construction of access for power lines, pipelines, and other similar installations often require long, narrow right-of-ways over sloping terrain. Disturbance and compaction promotes gully formation in these cleared strips by increasing the volume and velocity of runoff. Gully formation may be especially severe in tire tracks and ruts. To prevent gullying, runoff can often be diverted across the width of the right-of-way to undisturbed areas by using small predesigned diversions.

Give special consideration to each individual outlet area, as well as to the cumulative effect of added diversions. Use gravel to stabilize the diversion where significant vehicular traffic is anticipated.

3.2.4.3 Design and Installation Specifications

Height: 8-inch minimum measured from the channel bottom to the top of the ridge.

- Side slope of channel: 2H:1V maximum; 3H:1V or flatter when vehicles will cross.
- Base width of ridge: 6-inch minimum.
- Locate them to use natural drainage systems and to discharge into well vegetated stable areas.
- Guideline for Spacing:

Slope %	Spacing (ft)
< 5	125
5 - 10	100
10 - 20	75
20 – 35	50
> 35	Use rock lined ditch

- Grade of water bar and angle: Select angle that results in ditch slope of less than 2 percent.
- Install as soon as clearing and grading is complete. Reconstruct when construction is complete on a section when utilities are being installed.
- Compact the ridge when installed.
- Stabilize, seed, and mulch portions that are not subject to traffic. Gravel areas crossed by vehicles.

3.2.4.4 Maintenance Standards

Periodically inspect right-of-way diversions for wear and after every heavy rainfall inspect for erosion damage.

- Immediately remove sediment from the flow area and repair the dike.
- Check outlet areas and make timely repairs as needed.
- When permanent road drainage is established and the area above the temporary right-of-way diversion is permanently stabilized, remove the dike and fill the channel to blend with the natural ground, and appropriately stabilize the disturbed area.

3.2.5 BMP C204: Pipe Slope Drains

3.2.5.1 Purpose

To use a pipe to convey stormwater anytime water needs to be diverted away from or over bare soil to prevent gullies, channel erosion, and saturation of slide-prone soils.

3.2.5.2 Conditions of Use

Pipe slope drains should be used when a temporary or permanent stormwater conveyance is needed to move the water down a steep slope to avoid erosion (Figure II-3-15).

On highway projects, pipe slope drains should be used at bridge ends to collect runoff and pipe it to the base of the fill slopes along bridge approaches. These can be designed into a project and included as bid items. Another use on road projects is to collect runoff from pavement and pipe it away from side slopes. These are useful because there is generally lag time between having the first lift of asphalt installed and the curbs, gutters, and permanent drainage installed. Used in conjunction with sand bags or other temporary diversion devices, these will prevent massive amounts of sediment from leaving a project.

Water can be collected; channeled with sand bags, Triangular Silt Dikes, berms, or other material; and piped to temporary sediment ponds.

Pipe slope drains can be:

- Connected to new catch basins and used temporarily until all permanent piping is installed;
- Used to drain water collected from aquifers exposed on cut slopes and convey it to the base of the slope;
- Used to collect clean runoff from plastic sheeting and direct it away from exposed soil;
- Installed in conjunction with silt fence to drain collected water to a controlled area;
- Used to divert small seasonal streams away from construction. They have been used successfully on culvert replacement and extension jobs. Large flex pipe can be used on larger streams during culvert removal, repair, or replacement; and,
- Connected to existing down spouts and roof drains and used to divert water away from work areas during building renovation, demolition, and construction projects.

There are now several commercially available collectors that are attached to the pipe inlet and help prevent erosion at the inlet.

3.2.5.3 Design and Installation Specifications

Size the pipe to convey the flow. The capacity for temporary drains shall be sufficient to handle the peak flow from a 10-year, 24-hour storm event assuming a Type 1A rainfall distribution (3.0-inches). Alternatively, use 1.6 times the 10-year, 1-hour flow indicated by WWHM. Size permanent pipe slope drains for the 25-year, 24-hour peak flow.

- Use care in clearing vegetated slopes for installation.
- Re-establish cover immediately on areas disturbed by installation.
- Use temporary drains on new cut or fill slopes.
- Use diversion dikes or swales to collect water at the top of the slope.
- Ensure that the entrance area is stable and large enough to direct flow into the pipe.
- Piping of water through the berm at the entrance area is a common failure mode.
- The entrance shall consist of a standard flared end section for culverts 12 inches and larger with a minimum 6-inch metal toe plate to prevent runoff from undercutting the pipe inlet. The slope of the entrance shall be at least 3 percent. Sand bags may also be used at pipe entrances as a temporary measure.
- Thoroughly compact the soil around and under the pipe and entrance section to prevent undercutting.
- Securely connect the flared inlet section to the slope drain and have watertight connecting bands.
- Securely fasten, fuse or have gasketed, watertight fittings for the slope drain sections, and securely anchor them into the soil.
- Install thrust blocks anytime 90 degree bends are utilized. Depending on size of pipe and flow, these can be constructed with sand bags, straw bales staked in place, “T” posts and wire, or ecology blocks.
- Pipe needs to be secured along its full length to prevent movement. This can be done with steel “T” posts and wire. A post is installed on each side of the pipe and the pipe is wired to them. This should be done every 10-20 feet of pipe length, depending on the size of the pipe and quantity of water to be diverted.
- Use interceptor dikes to direct runoff into a slope drain. Ensure the height of the dike is at least 1 foot higher at all points than at the top of the inlet pipe.
- Stabilize the area below the outlet with a riprap apron (see BMP C209 Outlet Protection for the appropriate outlet material).
- If the pipe slope drain is conveying sediment-laden water, direct all flows into the sediment trapping facility.
- Materials specifications for any permanent piped system shall be set by the local government.

3.2.5.4 Maintenance Standards

Check inlet and outlet points regularly, especially after storms.

The inlet should be free of undercutting, and no water should be going around the point of entry. If there are problems, the headwall should be reinforced with compacted earth or sand bags.

- The outlet point should be free of erosion and installed with appropriate outlet protection.
- For permanent installations, inspect pipe periodically for vandalism and physical distress such as slides and wind-throw.
- Normally the pipe slope is so steep that clogging is not a problem with smooth wall pipe; however, debris may become lodged in the pipe.

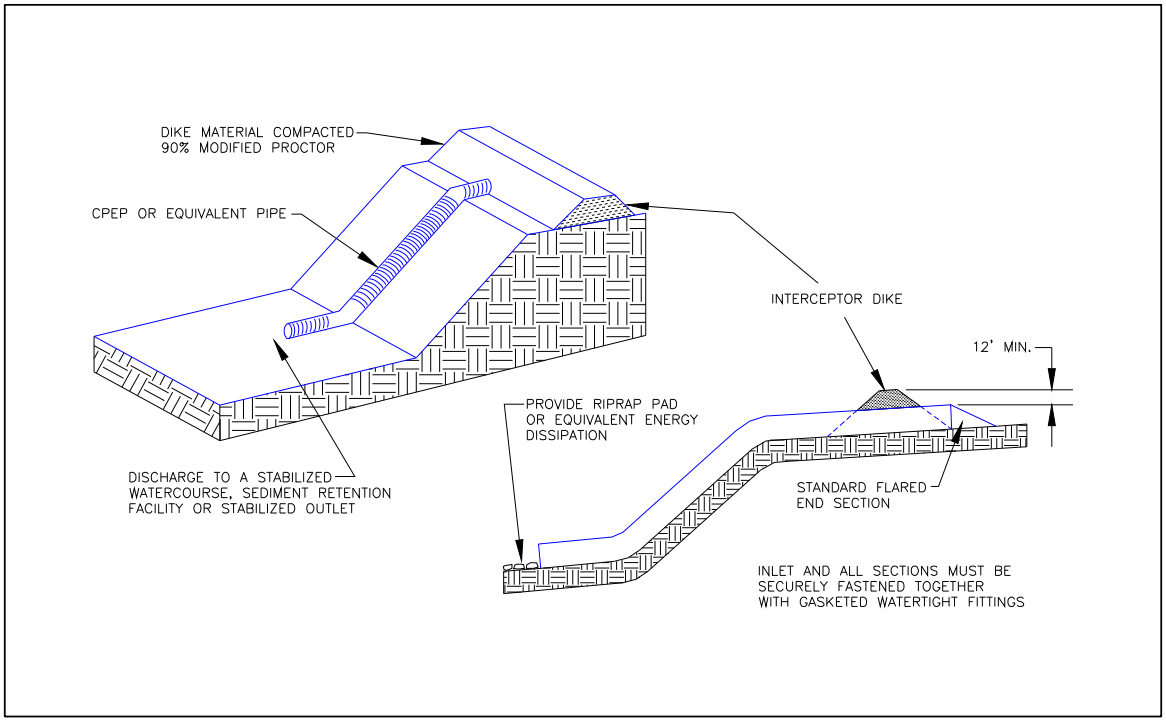

Figure II-3-15. Pipe Slope Drains

3.2.6 BMP C205: Subsurface Drains

3.2.6.1 Purpose

To intercept, collect, and convey groundwater to a satisfactory outlet, using a perforated pipe or conduit below the ground surface. Subsurface drains are also known as "French drains." The perforated pipe provides a dewatering mechanism to drain excessively wet soils, provide a stable base for construction, improve stability of structures with shallow foundations, or to reduce hydrostatic pressure to improve slope stability.

3.2.6.2 Conditions of Use

Use when excessive water must be removed from the soil. The soil permeability, depth to water table, and impervious layers are all factors which may govern the use of subsurface drains.

3.2.6.3 Design and Installation Specifications

- **Relief drains**
  - Are used either to lower the water table in large, relatively flat areas, improve the growth of vegetation, or to remove surface water.
  - Are installed along a slope and drain in the direction of the slope.
  - Can be installed in a grid pattern, a herringbone pattern, or a random pattern.
- **Interceptor drains**
  - Are used to remove excess groundwater from a slope, stabilize steep slopes, and lower the water table immediately below a slope to prevent the soil from becoming saturated.
  - Are installed perpendicular to a slope and drain to the side of the slope.
  - Usually consist of a single pipe or series of single pipes instead of a patterned layout.
- **Depth and spacing considerations for interceptor drains**
  - The depth of an interceptor drain is determined primarily by the depth to which the water table is to be lowered or the depth to a confining layer. For practical reasons, the maximum depth is usually limited to 6 feet, with a minimum cover of 2 feet to protect the conduit.
  - The soil should have depth and sufficient permeability to permit installation of an effective drainage system at a depth of 2 to 6 feet.
  - An adequate outlet for the drainage system must be available either by gravity or pumping.
  - The quantity and quality of discharge needs to be accounted for in the receiving stream (additional detention may be required).
  - This standard does not apply to subsurface drains for building foundations or deep excavations.

- The capacity of an interceptor drain is determined by calculating the maximum rate of groundwater flow to be intercepted. Therefore, it is good practice to make complete subsurface investigations, including hydraulic conductivity of the soil, before designing a subsurface drainage system.
- **Drain sizing considerations**
  - Size subsurface drains to carry the required capacity without pressure flow. The minimum diameter for a subsurface drain is 4 inches.
  - The minimum velocity required to prevent silting is 1.4 feet per second. Grade the line to achieve this velocity at a minimum. The maximum allowable velocity using a sand-gravel filter or envelope is 9 feet per second.
- Use filter material and fabric around all drains for proper bedding and filtration of fine materials. Envelopes and filters should surround the drain to a minimum of 3-inch thickness.
- Empty the outlet of the subsurface drain into a sediment pond through a catch basin. If free of sediment, it can then empty into a receiving channel, swale, or stable vegetated area adequately protected from erosion and undermining.
- Construct the trench on a continuous grade with no reverse grades or low spots.
- Stabilize soft or yielding soils under the drain with gravel or other suitable material.
- Backfill immediately after placement of the pipe. Do not allow sections of pipe to remain uncovered overnight or during a rainstorm. Place backfill material in the trench in such a manner that the drain pipe is not displaced or damaged.
- Do not install permanent drains near trees as tree roots may clog the lines. Use solid pipe with watertight connections where necessary to pass a subsurface drainage system through a stand of trees.
- **Outlet considerations**
  - Ensure that the outlet of a drain empties into a channel or other watercourse above the normal water level.
  - Secure an animal guard to the outlet end of the pipe to keep out rodents.
  - Use at least 10 feet of corrugated metal, cast iron, or heavy-duty plastic without perforations outlet pipe. Do not use an envelope or filter material around the outlet pipe, and bury at least two-thirds of the pipe length.
  - When outlet velocities exceed those allowable for the receiving stream, provide outlet protection.

3.2.6.4 Maintenance Standards

Check the subsurface drains periodically to ensure that they are free-flowing and not clogged with sediment or roots.

- Keep the outlet clean and free of debris.
- Keep surface inlets open and free of sediment and other debris.
- Trees located too close to a subsurface drain often clog the system with their roots. If a drain becomes clogged, relocate the drain or remove the trees as a last resort. Plan the placement of the drain to minimize this problem.
- Where drains are crossed by heavy vehicles, check the line to ensure that it is not crushed and use pipe material that can handle traffic loads.

3.2.7 BMP C206: Level Spreader

3.2.7.1 Purpose

To provide a temporary outlet for dikes and diversions consisting of an excavated depression constructed at zero grade across a slope. To convert concentrated runoff to sheet flow and release it onto areas stabilized by existing vegetation or an engineered filter strip.

3.2.7.2 Conditions of Use

Used when a concentrated flow of water needs to be dispersed over a large area with existing stable vegetation.

- Items to consider are:
  - What is the risk of erosion or damage if the flow may become concentrated?
  - Is an easement required if discharged to adjoining property?
  - Most of the flow should be as groundwater and not as surface flow.
  - Is there an unstable area downstream that cannot accept additional groundwater?
- Use only where the slopes are gentle, the water volume is relatively low, and the soil will adsorb most of the low flow events.

3.2.7.3 Design and Installation Specifications

Use above undisturbed areas that are stabilized by existing vegetation.

If the level spreader has any low points, flow will concentrate, create channels and may cause erosion.

- Discharge area below the outlet must be uniform with a slope of less than 5H:1V.
- Construct outlet level in a stable, undisturbed soil profile (not on fill).
- Do not allow the runoff to reconcentrate after release unless intercepted by another downstream measure.
- The grade of the channel for the last 20 feet of the dike or interceptor entering the level spreader shall be less than or equal to 1 percent. The grade of the level spreader shall be 0 percent to ensure uniform spreading of storm runoff.
- A 6-inch high gravel berm placed across the level lip shall consist of washed crushed rock, 2- to 4-inch or 3/4-inch to 1½-inch size.
- Calculate the spreader length by estimating the peak flow expected from the 10-year, 24-hour design storm (3.0-inches). The length of the spreader shall be a minimum of 15 feet for 0.1 cubic feet per second and shall be 10 feet for each 0.1 cubic feet per second there after to a maximum of 0.5 cubic feet per second per spreader. Use multiple spreaders for higher flows.
- The width of the spreader should be at least 6 feet.

- The depth of the spreader as measured from the lip should be at least 6 inches and it should be uniform across the entire length.
- Level spreaders shall be setback from the property line unless there is an easement for flow.
- Level spreaders, when installed every so often in grassy swales, keep the flows from concentrating. Materials that can be used include sand bags, lumber, logs, concrete, and pipe. To function properly, the material needs to be installed level and on contour. Figure II-3-16 and Figure II-3-17 provide a cross-section and a detail of a level spreader.

3.2.7.4 Maintenance Standards

The spreader should be inspected after every runoff event to ensure proper function.

- The contractor should avoid the placement of any material on the structure and should prevent construction traffic from crossing over the structure.
- If the spreader is damaged by construction traffic, immediately repair it.

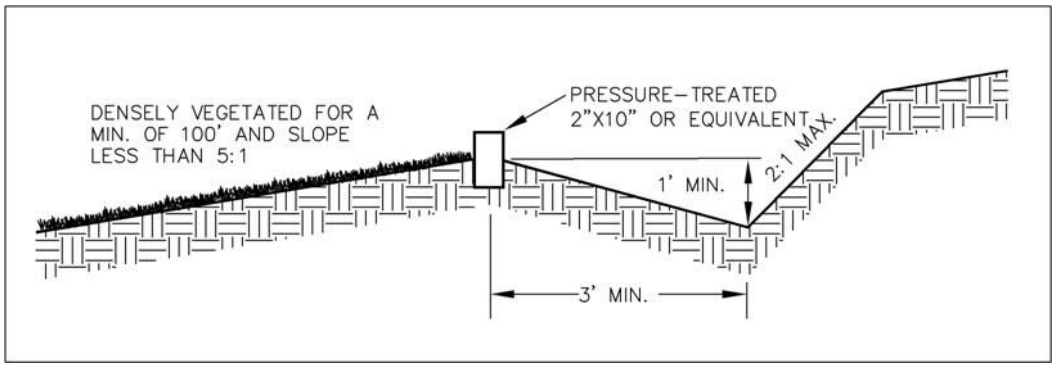

Figure II-3-16. Cross-Section of a Level Spreader

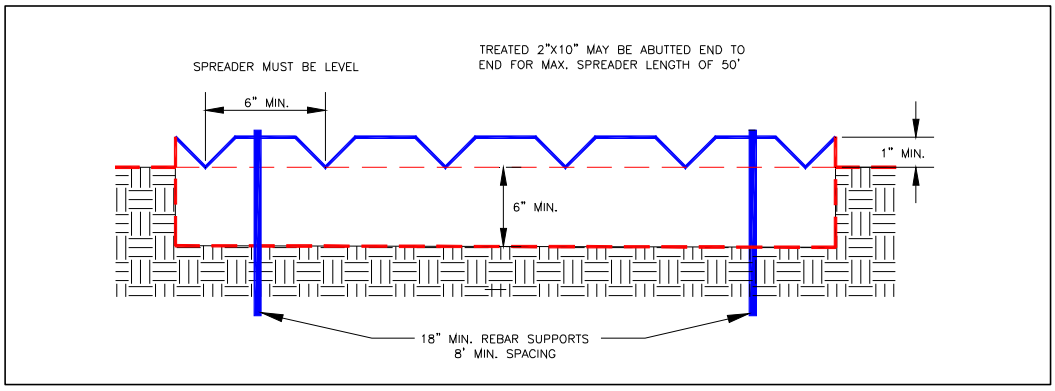

Figure II-3-17. Detail of a Level Spreader

3.2.8 BMP C207: Check Dams

3.2.8.1 Purpose

Construction of small dams across a swale or ditch reduces the velocity of concentrated flow and dissipates energy at the check dam.

3.2.8.2 Conditions of Use

Where temporary channels or permanent channels are not yet vegetated, channel lining is infeasible, and velocity checks are required.

- Do not place check dams in streams unless approved by the State Department of Fish and Wildlife. Do not place check dams in wetlands without approval from a permitting agency.
- Do not place check dams below the expected backwater from any salmonid bearing water between September 15 and June 15 to ensure that there is no loss of high flow refuge habitat for overwintering juvenile salmonids and emergent salmonid fry.

3.2.8.3 Design and Installation Specifications

Whatever material is used, the dam should form a triangle when viewed from the side. This prevents undercutting as water flows over the face of the dam rather than falling directly onto the ditch bottom.

Check dams in association with sumps work more effectively at slowing flow and retaining sediment than just a check dam alone. A deep sump should be provided immediately upstream of the check dam.

- In some cases, if carefully located and designed, check dams can remain as permanent installations with very minor regrading. They may be left as either spillways, in which case accumulated sediment would be graded and seeded, or as check dams to prevent further sediment from leaving the site.
- Check dams can be constructed of either rock or pea-gravel filled bags. Numerous new products are also available for this purpose. They tend to be re-usable, quick and easy to install, effective, and cost efficient.
- Check dams should be placed perpendicular to the flow of water.
- The maximum spacing between the dams shall be such that the toe of the upstream dam is at the same elevation as the top of the downstream dam.
- Keep a maximum height of 2 feet at the center of the dam.
- Keep the center of the check dam at least 12 inches lower than the outer edges at natural ground elevation.
- Keep the side slopes of the check dam at 2H:1V or flatter.
- Key the stone into the ditch banks and extend it beyond the abutments a minimum of 18 inches to avoid washouts from overflow around the dam.

- Use filter fabric foundation under a rock or sand bag check dam. If a blanket ditch liner is used, this is not necessary. A piece of organic or synthetic blanket cut to fit will also work for this purpose.
- Construct rock check dams of appropriately sized rock. Place the rock by hand or by mechanical means (no dumping of rock to form dam) to achieve complete coverage of the ditch or swale and to ensure that the center of the dam is lower than the edges. The rock used must be large enough to stay in place given the expected design flow through the channel.
- In the case of grass-lined ditches and swales, remove all check dams and accumulated sediment when the grass has matured sufficiently to protect the ditch or swale - unless the slope of the swale is greater than 4 percent. Seed and mulch the area beneath the check dams immediately after dam removal.
- Ensure that channel appurtenances, such as culvert entrances below check dams, are not subject to damage or blockage from displaced stones. Figure II-3-18 depicts a typical rock check dam.

3.2.8.4 Maintenance Standards

Monitor check dams for performance and sediment accumulation during and after each runoff producing rainfall. Remove sediment when it reaches one half the sump depth.

- Anticipate submergence and deposition above the check dam and erosion from high flows around the edges of the dam.
- If significant erosion occurs between dams, install a protective riprap liner in that portion of the channel.

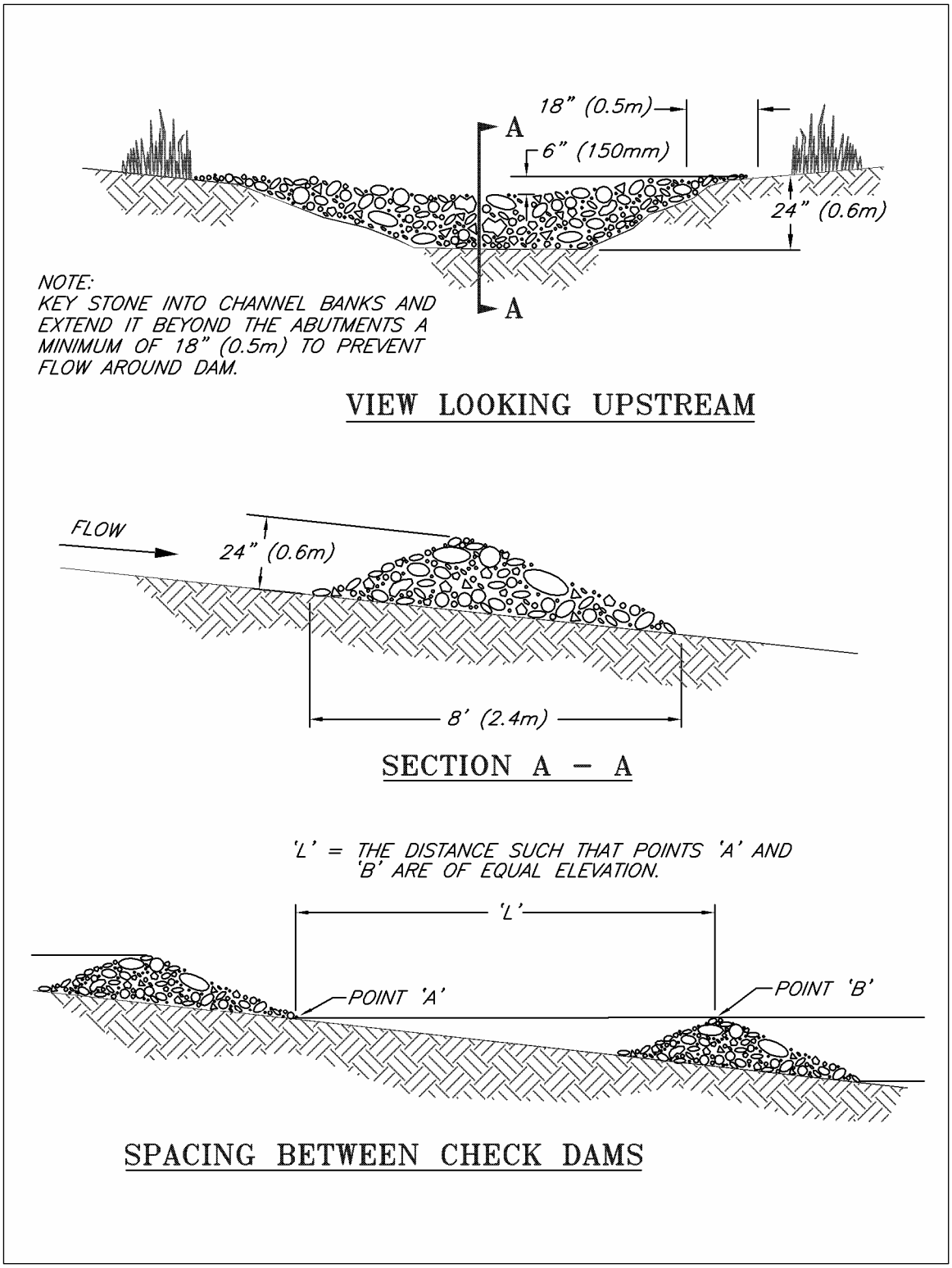

Figure II-3-18. Check Dams

3.2.9 BMP C208: Triangular Silt Dike (Geotextile-Encased Check Dam)

3.2.9.1 Purpose

Triangular silt dikes (TSDs) may be used as check dams, for perimeter protection, for temporary soil stockpile protection, for drop inlet protection, or as a temporary interceptor dike (see Figure II-3-19 and Figure II-3-20).

3.2.9.2 Conditions of Use

May be used in place of straw bales for temporary check dams in ditches of any dimension.

- May be used on soil or pavement with adhesive or staples.
- TSDs have been used to build temporary:
  - sediment ponds
  - diversion ditches
  - concrete wash out facilities
  - curbing
  - water bars
  - level spreaders
  - berms

3.2.9.3 Design and Installation Specifications

Made of urethane foam sewn into a woven geosynthetic fabric.

It is triangular, 10 inches to 14 inches high in the center, with a 20-inch to 28-inch base. A 2–foot apron extends beyond both sides of the triangle along its standard section of 7 feet. A sleeve at one end allows attachment of additional sections as needed.

- Install with ends curved up to prevent water from flowing around the ends.
- The fabric flaps and check dam units are attached to the ground with wire staples. Wire staples should be No. 11 gauge wire and should be 200 mm to 300 mm in length.
- When multiple units are installed, the sleeve of fabric at the end of the unit shall overlap the abutting unit and be stapled.
- Check dams should be located and installed as soon as construction will allow.
- Check dams should be placed perpendicular to the flow of water.
- When used as check dams, the leading edge must be secured with rocks, sandbags, or a small key slot and staples.

3.2.9.4 Maintenance Standards

Monitor triangular silt dikes for performance and sediment accumulation during and after each runoff producing rainfall. Remove sediment when it reaches one half the height of the dam.

Anticipate submergence and deposition above the triangular silt dam and erosion from high flows around the edges of the dam. Immediately repair any damage or undercutting of the dam.

In the case of grass-lined ditches and swales, remove check dams and accumulated sediment when the grass has matured sufficiently to protect the ditch or swale, unless the slope of the swale is greater than 4 percent. Seed and mulch the area beneath the check dams immediately after dam removal.

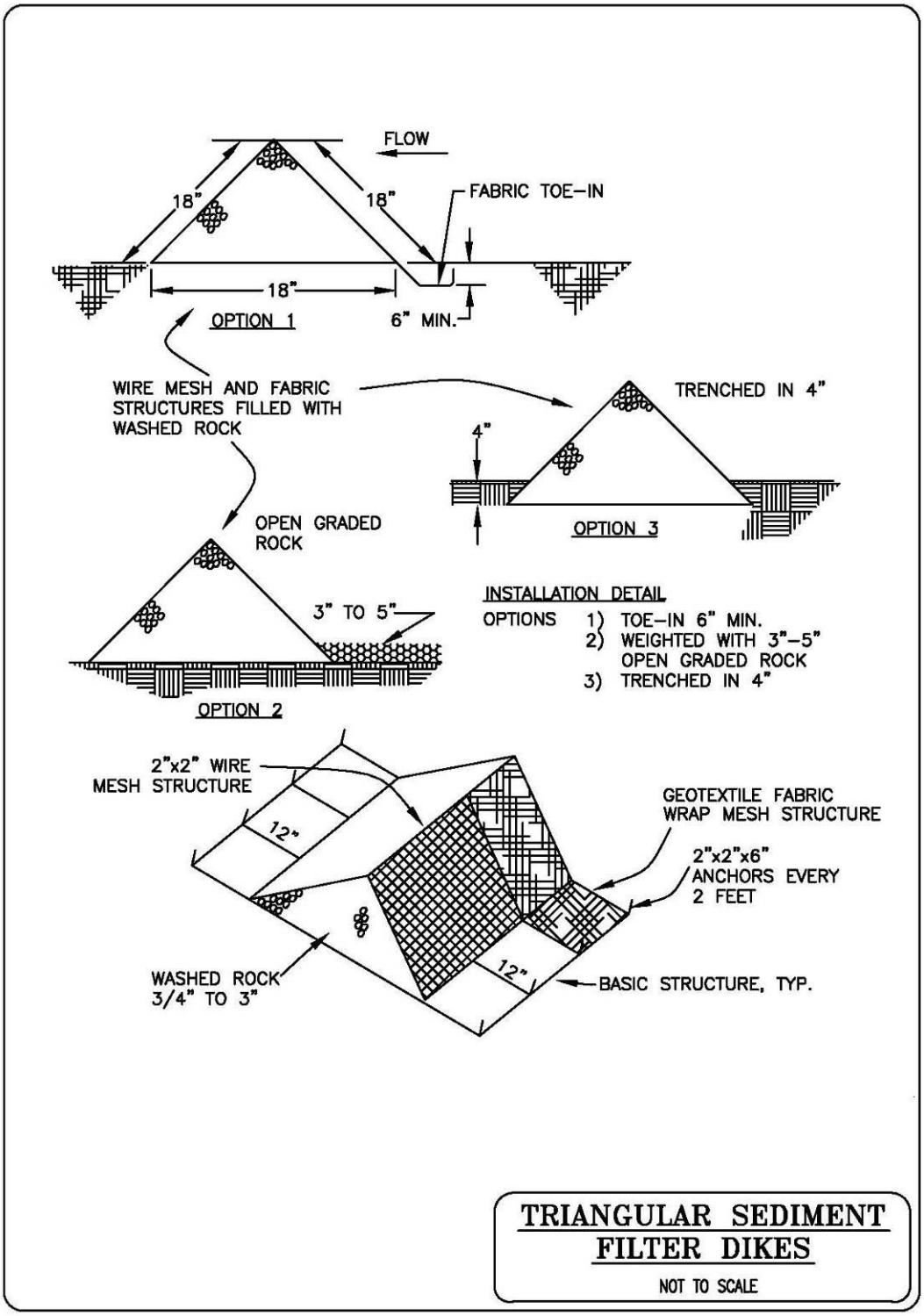

Figure II-3-19. Sediment Barrier – Triangular Sediment Filter Dikes

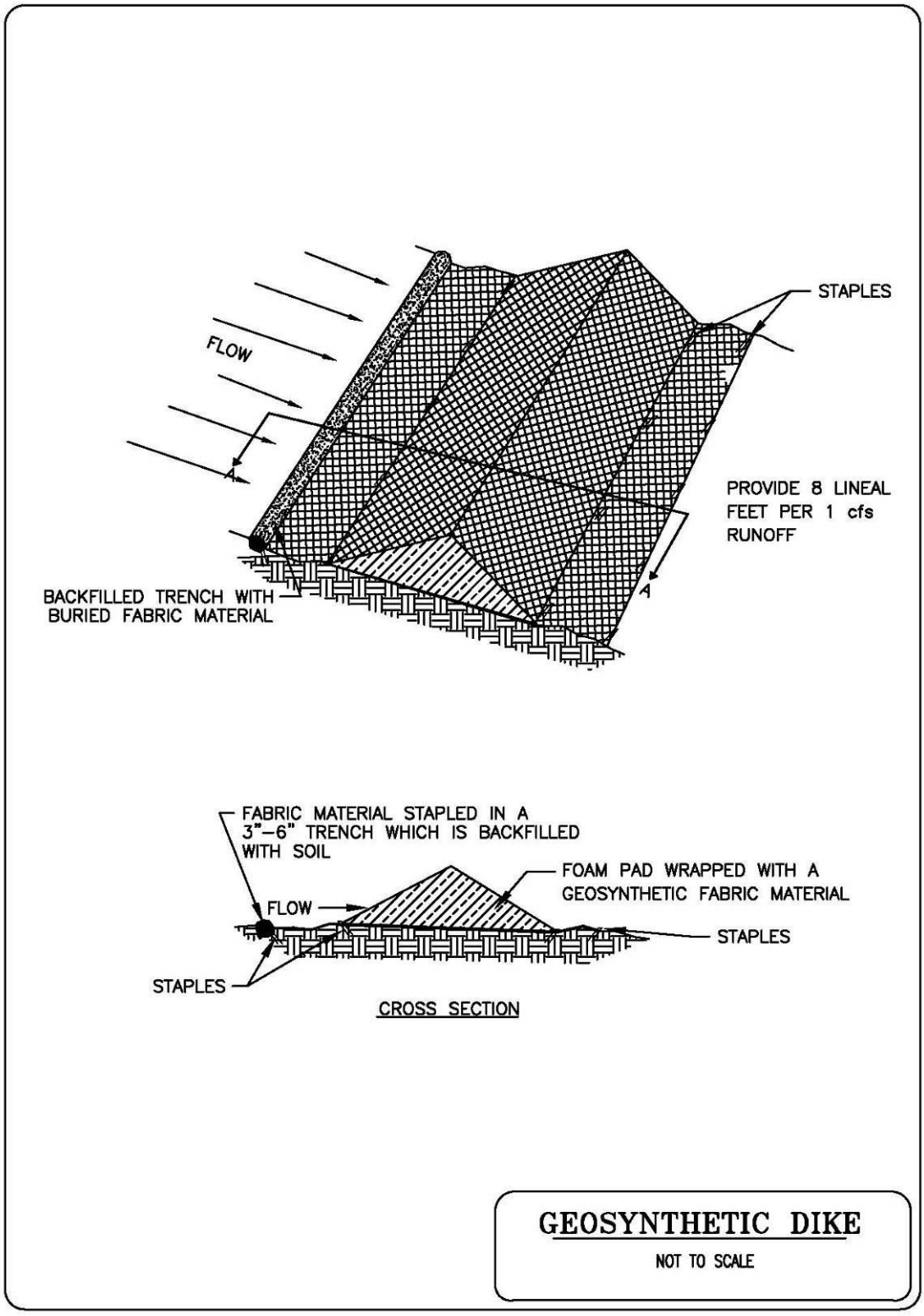

Figure II-3-20. Sediment Barrier – Geosynthetic Dike

3.2.10 BMP C209: Outlet Protection

3.2.10.1 Purpose

Outlet protection prevents scour at conveyance outlets and minimizes the potential for downstream erosion by reducing the velocity of concentrated stormwater flows.

3.2.10.2 Conditions of Use

Outlet protection is required at the outlets of all ponds, pipes, ditches, or other conveyances, and where runoff is conveyed to a natural or manmade drainage feature such as a stream, wetland, lake, or ditch.

3.2.10.3 Design and Installation Specifications

Protect the receiving channel at the outlet of a culvert from erosion by rock lining a minimum of 6 feet downstream and extending rock lining up the channel sides a minimum of 1–foot above the maximum tailwater elevation or 1-foot above the crown, whichever is higher. For large pipes (more than 18 inches in diameter), the outlet protection lining of the channel is lengthened to four times the diameter of the culvert.

- Standard wingwalls, and tapered outlets and paved channels should also be considered when appropriate for permanent culvert outlet protection. (See the WSDOT Hydraulic Manual, available through WSDOT Engineering Publications).
- Organic or synthetic erosion blankets, with or without vegetation, may be, cheaper, and easier to install than rock. Materials can be chosen using manufacturer product specifications. ASTM test results are available for most products and the designer can choose the correct material for the expected flow.
- With low flows, vegetation (including sod) can be effective.
- Use the following guidelines for riprap outlet protection:
    - If the discharge velocity at the outlet is less than 5 feet per second (pipe slope less than 1 percent), use 2-inch to 8-inch riprap. Minimum thickness is 1-foot.
    - For 5 to 10 feet per second discharge velocity at the outlet (pipe slope less than 3 percent), use 24-inch to 4-foot riprap. Minimum thickness is 2 feet.
    - For outlets at the base of steep slope pipes (pipe slope greater than 10 percent), an engineered energy dissipater shall be used.
- Always use filter fabric or erosion control blankets under riprap to prevent scour and channel erosion.
- New pipe outfalls can provide an opportunity for low-cost fish habitat improvements. For example, an alcove of low-velocity water can be created by constructing the pipe outfall and associated energy dissipater back from the stream edge and digging a channel, over-widened to the upstream side, from the outfall. Overwintering juvenile and migrating adult salmonids may use the alcove as shelter during high flows. Bank

stabilization, bioengineering, and habitat features may be required for disturbed areas. See Volume V for more information on outfall system design.

3.2.10.4 Maintenance Standards

- Inspect and repair as needed.
- Add rock as needed to maintain the intended function.
- Clean energy dissipater if sediment builds up.

Figure II-3-21. No Figure Placeholder

3.2.11 BMP C220: Storm Drain Inlet Protection

3.2.11.1 Purpose

To prevent coarse sediment from entering drainage systems prior to permanent stabilization of the disturbed area.

3.2.11.2 Conditions of Use

Where storm drain inlets are to be made operational before permanent stabilization of the disturbed drainage area.

Provide protection for all storm drain inlets downslope and within 500 feet of a disturbed or construction area, unless the runoff that enters the catch basin will be conveyed to a sediment pond or trap. Inlet protection may be used anywhere to protect the drainage system. It is likely that the drainage system will still require cleaning.

Table II-3-9 lists several options for inlet protection. All of the methods for storm drain inlet protection are prone to plugging and require a high frequency of maintenance. Drainage areas should be limited to 1 acre or less. Emergency overflows may be required where stormwater ponding would cause a hazard. If an emergency overflow is provided, additional end-of-pipe treatment may be required.

Only bag filter type catch basin filters (per Section 3.2.11.3) are allowed within the right of way.

Table II-3-9. Storm Drain Inlet Protection

Type of Inlet Protection	Emergency Overflow	Applicable for Paved/Earthen Surfaces	Conditions of Use
Excavated drop inlet protection	Yes, temporary flooding will occur	Earthen	Applicable for heavy flows. Easy to maintain. Large area requirement: 30’ x 30’ per acre.
Block and gravel drop filter	Yes	Paved or earthen	Applicable for heavy concentrated flows. Will not pond.
Gravel and mesh filter	No	Paved	Applicable for heavy concentrated flows. Will pond. Can withstand traffic.
Catch basin filters	Yes	Paved or earthen	Frequent maintenance required.
Curb inlet protection with a wooden weir	Small capacity overflow	Paved	Used for sturdy, more compact installation.
Block and gravel curb inlet protection	Yes	Paved	Sturdy, but limited filtration.

3.2.11.3 Design and Installation Specifications

Excavated Drop Inlet Protection

An excavated impoundment around the storm drain. Sediment settles out of the stormwater prior to entering the storm drain.

- Depth 1 to 2 feet, as measured from the crest of the inlet structure.
- Side slopes of excavation no steeper than 2H:1V.
- Minimum volume of excavation 35 cubic yards.
- Shape basin to fit site with longest dimension oriented toward the longest inflow area.
- Install provisions for draining to prevent standing water problems.
- Clear the area of all debris.
- Grade the approach to the inlet uniformly.
- Drill weep holes into the side of the inlet.
- Protect weep holes with screen wire and washed aggregate.
- Seal weep holes when removing structure and stabilizing area.
- It may be necessary to build a temporary dike to the down slope side of the structure to prevent bypass flow.

Block and Gravel Filter

A barrier formed around the storm drain inlet with standard concrete blocks and gravel. See Figure II-3-22.

- Height 1 to 2 feet above inlet.
- Recess the first row 2 inches into the ground for stability.
- Support subsequent courses by placing a piece of 2x4 lumber through the block opening.
- Do not use mortar.
- Lay some blocks in the bottom row on their side for dewatering the pool.
- Place hardware cloth or comparable wire mesh with ½-inch openings over all block openings.
- Place gravel just below the top of blocks on slopes of 2H:1V or flatter.
- An alternative design is a gravel donut.
- Inlet slope of 3H:1V.
- Outlet slope of 2H:1V.

- 1-foot wide level stone area between the structure and the inlet.
- Inlet slope stones 3 inches in diameter or larger.
- Outlet slope use gravel ½- to ¾-inch at a minimum thickness of 1-foot.

Gravel and Wire Mesh Filter

A gravel barrier placed over the top of the inlet (see Figure II-3-23). This structure does not provide an overflow.

- Hardware cloth or comparable wire mesh with ½-inch openings.
- Coarse aggregate.
- Height 1-foot or more, 18 inches wider than inlet on all sides.
- Place wire mesh over the drop inlet so that the wire extends a minimum of 1-foot beyond each side of the inlet structure.
- If more than one strip of mesh is necessary, overlap the strips.
- Place coarse aggregate over the wire mesh.
- The depth of the gravel should be at least 12 inches over the entire inlet opening and extend at least 18 inches on all sides.

Catchbasin Filters

Inserts (Figure II-3-24) shall be designed by the manufacturer for use at construction sites. The limited sediment storage capacity increases the frequency of inspection and maintenance required, which may be daily for heavy sediment loads. The maintenance requirements can be reduced by combining a catchbasin filter with another type of inlet protection. This type of inlet protection provides flow bypass without overflow and therefore may be a better method for inlets located along active rights-of-way. See Figure II-C-46 for one example.

- Should have a minimum of 5 cubic feet of storage.
- Dewatering provisions.
- High-flow bypass that will not clog under normal use at a construction site.
- The catchbasin filter is inserted in the catchbasin just below the grating.
- Only bag filter type catch basin filters are allowed in the City right-of-way.

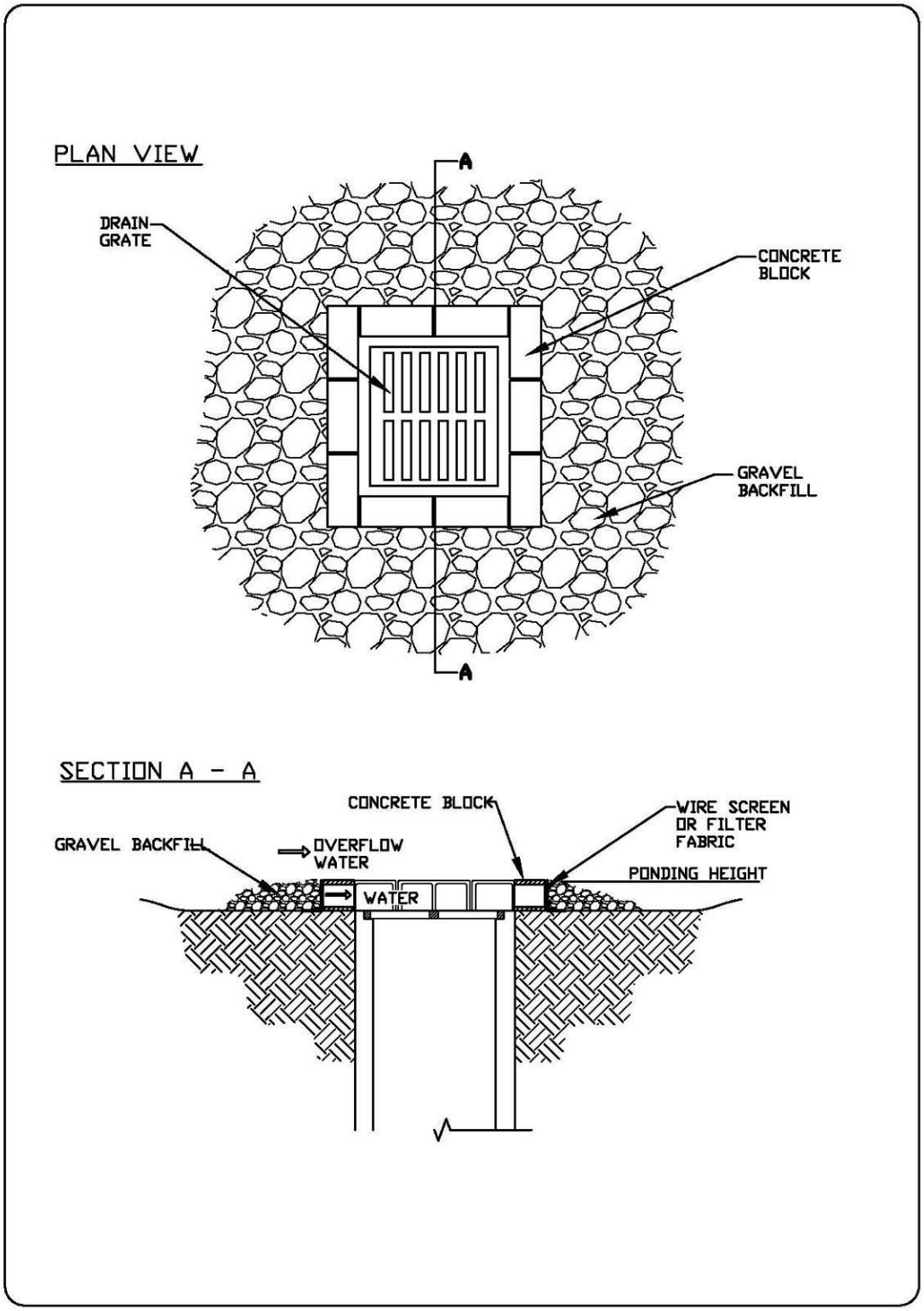

Figure II-3-22. Drop Inlet with Block and Gravel Filter

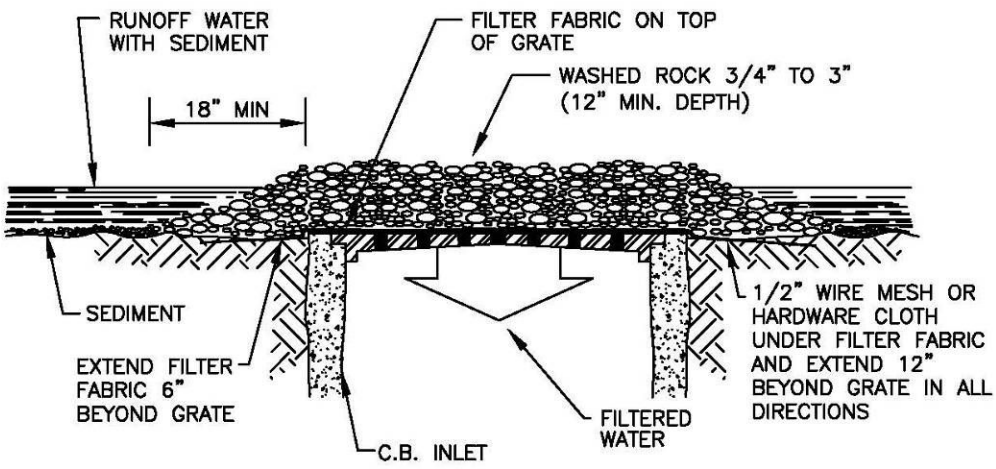

Figure II-3-23. Gravel and Wire Mesh Filter

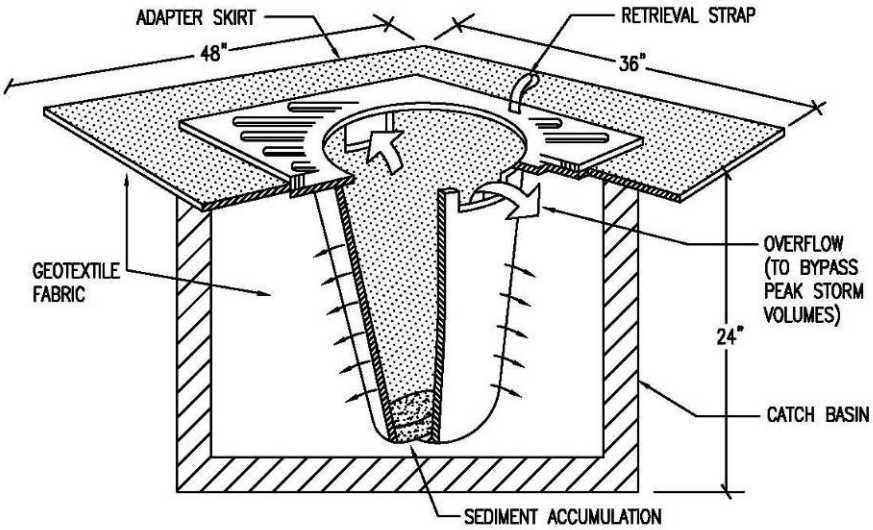

INLET PROTECTION NOTES:

1. FILTERS SHALL BE INSPECTED AFTER EACH STORM EVENT AND CLEANED OR REPLACED WHEN 1/3 FULL.

BAG FILTER

NOT TO SCALE

Figure II-3-24. Catchbasin Filter

Curb Inlet Protection with Wooden Weir

Barrier formed around a curb inlet with a wooden frame and gravel.

- Wire mesh with ½-inch openings.
- Extra strength filter cloth.
- Construct a frame.
- Attach the wire and filter fabric to the frame.
- Pile coarse washed aggregate against the wire and fabric.
- Place weight on frame anchors.

Block and Gravel Curb Inlet Protection

Barrier formed around an inlet with concrete blocks and gravel. See Figure II-3-25.

- Wire mesh with ½-inch openings.
- Place two concrete blocks on their sides abutting the curb at either side of the inlet opening. These are spacer blocks.
- Place a 2x4 stud through the outer holes of each spacer block to align the front blocks.
- Place blocks on their sides across the front of the inlet and abutting the spacer blocks.
- Place wire mesh over the outside vertical face.
- Pile coarse aggregate against the wire to the top of the barrier.

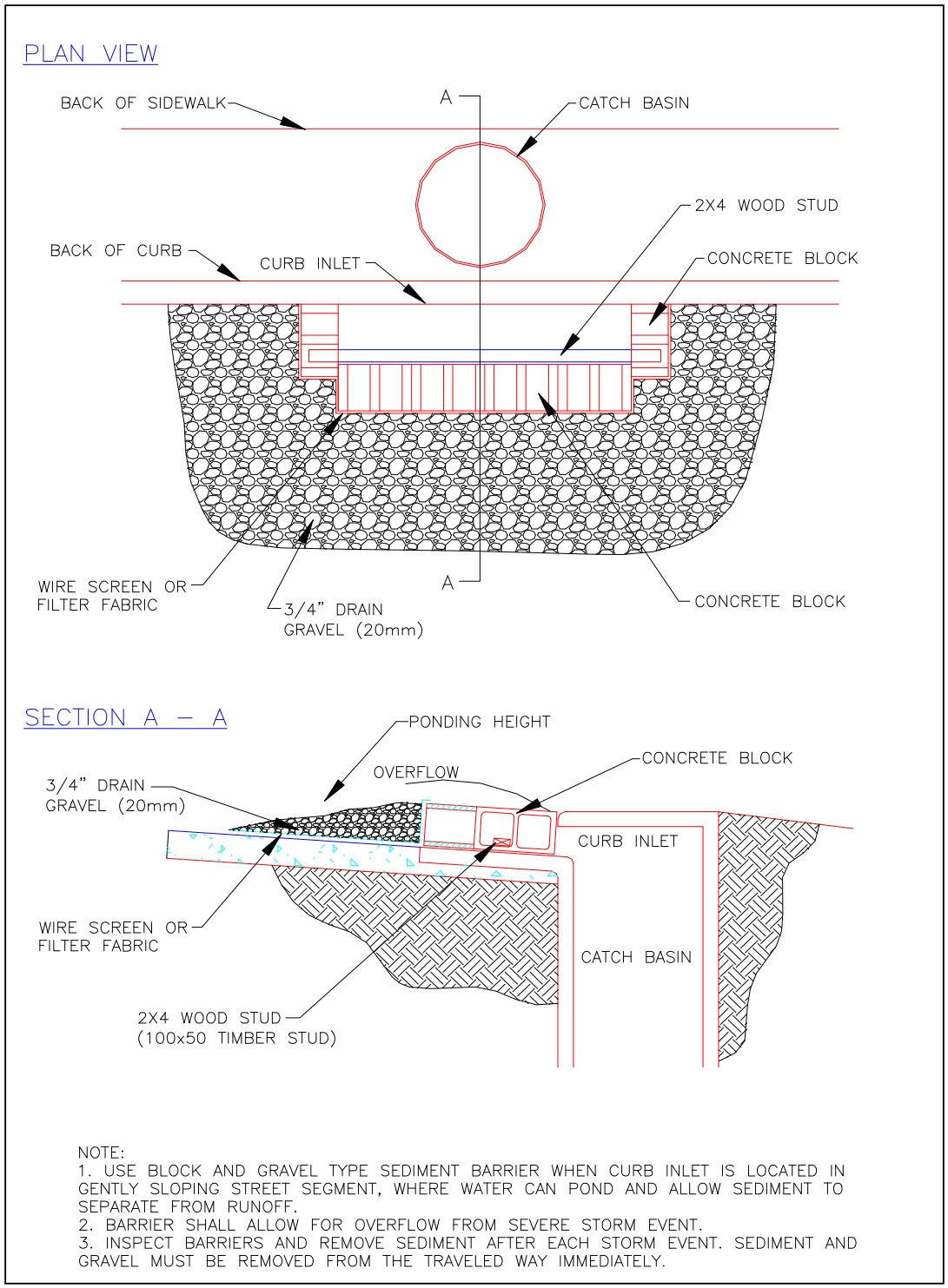

Figure II-3-25. Block and Gravel Curb Inlet Protection

Curb and Gutter Sediment Barrier

Sandbag or rock berm (riprap and aggregate) 3 feet high and 3 feet wide in a horseshoe shape. See Figure II-3-26.

- Construct a horseshoe shaped berm, faced with coarse aggregate if using riprap, 3 feet high and 3 feet wide, at least 2 feet from the inlet.
- Construct a horseshoe shaped sedimentation trap on the outside of the berm sized to sediment trap standards for protecting a culvert inlet.

3.2.11.4 Maintenance Standards

Inspect catch basin filters frequently, especially after storm events. If the insert becomes clogged, clean or replace it.

- For systems using stone filters: If the stone filter becomes clogged with sediment, the stones must be pulled away from the inlet and cleaned or replaced. Since cleaning of gravel at a construction site may be difficult, an alternative approach would be to use the clogged stone as fill and put fresh stone around the inlet.
- Do not wash sediment into storm drains while cleaning. Spread all excavated material evenly over the surrounding land area or stockpile and stabilize as appropriate.

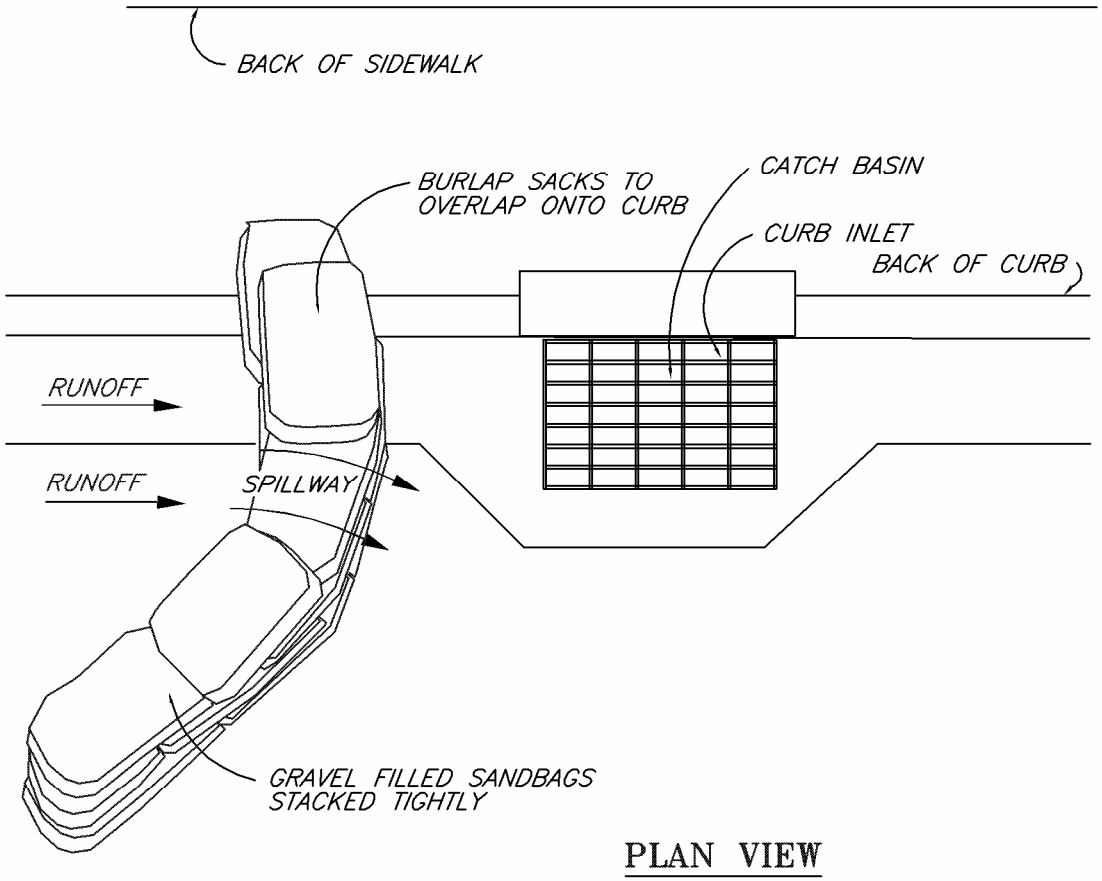

NOTES:

1. PLACE CURB TYPE SEDIMENT BARRIERS ON GENTLY SLOPING STREET SEGMENTS, WHERE WATER CAN POND AND ALLOW SEDIMENT TO SEPARATE FROM RUNOFF.
2. SANDBAGS OF EITHER BURLAP OR WOVEN 'GEOTEXTILE' FABRIC, ARE FILLED WITH GRAVEL, LAYERED AND PACKED TIGHTLY.
3. LEAVE A ONE SANDBAG GAP IN THE TOP ROW TO PROVIDE A SPILLWAY FOR OVERFLOW.
4. INSPECT BARRIERS AND REMOVE SEDIMENT AFTER EACH STORM EVENT. SEDIMENT AND GRAVEL MUST BE REMOVED FROM THE TRAVELED WAY IMMEDIATELY.

Figure II-3-26. Curb and Gutter Sediment Barrier

3.2.12 BMP C231: Brush Barrier

3.2.12.1 Purpose

The purpose of brush barriers is to reduce the transport of coarse sediment from a construction site by providing a temporary physical barrier to sediment and reducing the runoff velocities of overland flow.

3.2.12.2 Conditions of Use

- Brush barriers may be used downslope of all disturbed areas of less than one-quarter acre.
- Brush barriers are not intended to treat concentrated flows, nor are they intended to treat substantial amounts of overland flow. Any concentrated flows must be conveyed through the drainage system to a sediment pond. The only circumstance in which overland flow can be treated solely by a barrier, rather than by a sediment pond, is when the area draining to the barrier is small.
- Only install brush barriers on contours.

3.2.12.3 Design and Installation Specifications

- Height 2 feet (minimum) to 5 feet (maximum).
- Width 5 feet at base (minimum) to 15 feet (maximum).
- Filter fabric (geotextile) may be anchored over the brush berm to enhance the filtration ability of the barrier. Ten-ounce burlap is an adequate alternative to filter fabric.
- Chipped site vegetation, composted mulch, or wood-based mulch (hog fuel) can be used to construct brush barriers.
- A 100 percent biodegradable installation can be constructed using 10-ounce burlap held in place by wooden stakes. Figure II-3-27 depicts a typical brush barrier.

3.2.12.4 Maintenance Standards

- Do not allow erosion or concentrated runoff under or around the barrier. If concentrated flows are bypassing the barrier, it must be expanded or augmented by toed-in filter fabric.
- Maintain the dimensions of the barrier.

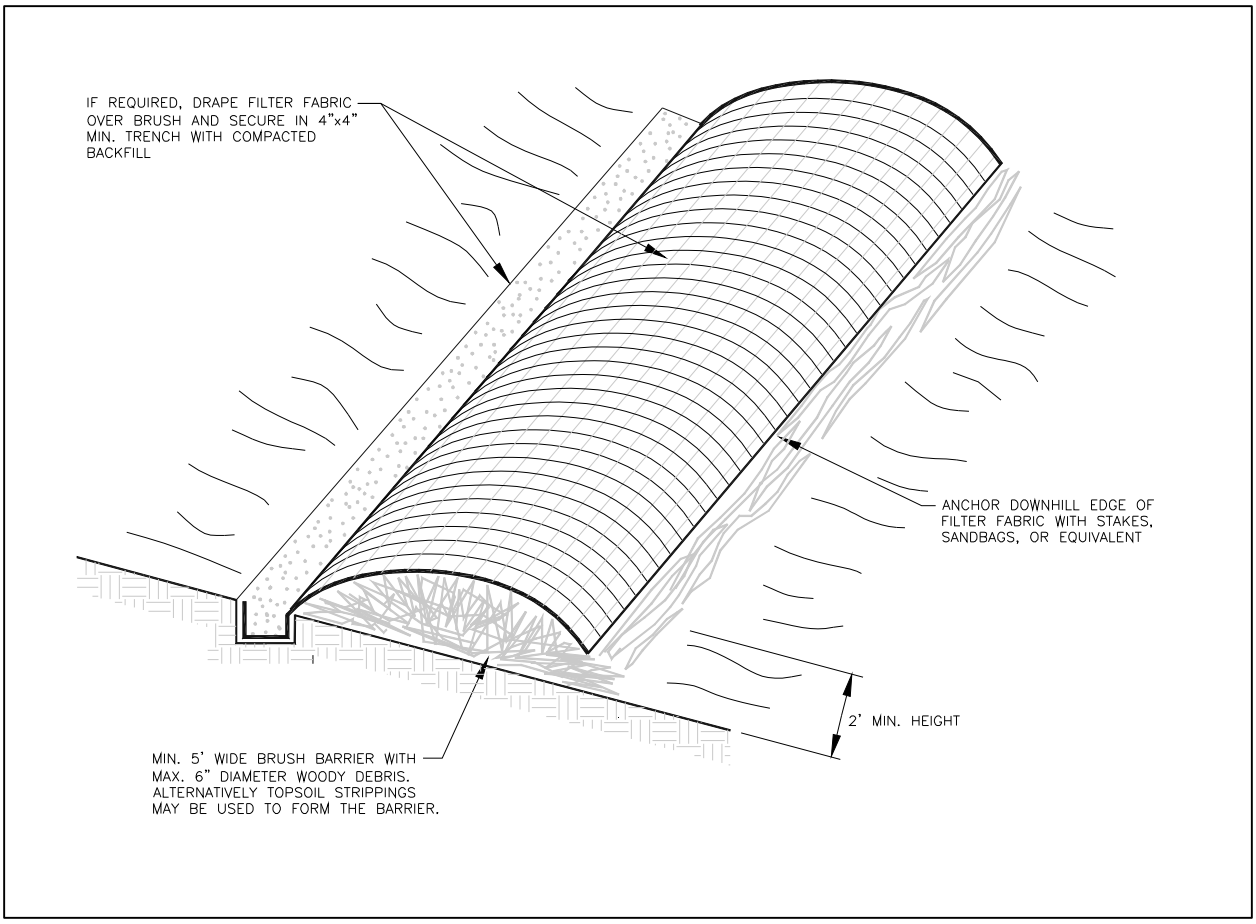

Figure II-3-27. Brush Barrier

3.2.13 BMP C232: Gravel Filter Berm

3.2.13.1 Purpose

A gravel filter berm is constructed on rights-of-way or traffic areas within a construction site to retain sediment by using a filter berm of gravel or crushed rock.

3.2.13.2 Conditions of Use

Where a temporary measure is needed to retain sediment from rights-of-way or in traffic areas on construction sites.

3.2.13.3 Design and Installation Specifications

Berm material shall be ¾ to 3 inches in size, washed well-graded gravel or crushed rock, with less than 5 percent fines.

- Space berms:
  - Every 300 feet on slopes less than 5 percent
  - Every 200 feet on slopes between 5 percent and 10 percent
  - Every 100 feet on slopes greater than 10 percent
- Berm dimensions:
  - 1 foot high with 3:1 side slopes
  - 8 linear feet per 1 cubic foot per second runoff based on the 10-year, 24-hour design storm (3.0-inches)

3.2.13.4 Maintenance Standards

Regular inspection is required. Remove sediment and replace filter material as needed.

3.2.14 BMP C233: Silt Fence

3.2.14.1 Purpose

Use of a silt fence reduces the transport of coarse sediment from a construction site by providing a temporary physical barrier to sediment and reducing the runoff velocities of overland flow. See Figure II-3-28 for details on silt fence construction.

3.2.14.2 Conditions of Use

Silt fence may be used downslope of all disturbed areas.

- Silt fence is not intended to treat concentrated flows, nor is it intended to treat substantial amounts of overland flow. Convey any concentrated flows through the drainage system to a sediment pond. The only circumstance in which overland flow can be treated solely by a silt fence, rather than by a sediment pond, is when the area draining to the fence is one acre or less and flow rates are less than 0.5 cfs.
- Do not construct silt fences in streams or use them in V-shaped ditches. They are not an adequate method of silt control for anything deeper than sheet or overland flow.

3.2.14.3 Design and Installation Specifications

Drainage area of 1 acre or less or in combination with sediment basin on a larger site.

Maximum slope steepness (perpendicular to fence line) 1H:1V.

- Maximum sheet or overland flow path length to the fence of 100 feet.
- No flows greater than 0.5 cubic feet per second.
- The geotextile used shall meet the following standards. All geotextile properties listed below are minimum average roll values (i.e., the test result for any sampled roll in a lot shall meet or exceed the values shown in Table II-3-10).

Table II-3-10. Geotextile Standards

Polymeric Mesh AOS (ASTM D4751)	0.60 mm maximum for slit film wovens (#30 sieve). 0.30 mm maximum for all other geotextile types (#50 sieve). 0.15 mm minimum for all fabric types (#100 sieve).
Water Permittivity (ASTM D4491)	0.02 sec^{-1} minimum
Grab Tensile Strength (ASTM D4632)	180 lbs. minimum for extra strength fabric. 100 lbs. minimum for standard strength fabric.
Grab Tensile Strength (ASTM D4632)	30% maximum
Ultraviolet Resistance (ASTM D4355)	70% minimum

- Support standard strength fabrics with wire mesh, chicken wire, 2-inch x 2-inch wire, safety fence, or jute mesh to increase the strength of the fabric. Silt fence materials are available that have synthetic mesh backing attached.
- Filter fabric material shall contain ultraviolet ray inhibitors and stabilizers to provide a minimum of six months of expected usable construction life at a temperature range of 0° to 120° Fahrenheit.
- 100 percent biodegradable silt fence is available that is strong and long lasting.
- The following are standard design and installation methods. Refer to Figure II-3-28 for standard silt fence details.
    - Install and maintain temporary silt fences at the locations shown in the plans. Install the silt fences in the areas of clearing, grading, or drainage prior to starting those activities. Do not consider a silt fence temporary if the silt fence must function beyond the life of the contract. The silt fence shall prevent soil carried by runoff water from going beneath, through, or over the top of the silt fence, but shall allow the water to pass through the fence.
    - The minimum height of the top of silt fence shall be 2 feet and the maximum height shall be 2½ feet above the original ground surface.
    - Sew the geotextile together at the point of manufacture, or at an approved location as determined by the Engineer, to form geotextile lengths as required. Locate all sewn seams at a support post. Alternatively, two sections of silt fence can be overlapped, provided the Contractor can demonstrate, to the satisfaction of the Engineer, that the overlap is long enough and adjacent fence sections are close enough together to prevent silt laden water from escaping through the fence at the overlap.
    - Attach the geotextile on the up-slope side of the posts and support system with staples, wire, or in accordance with the manufacturer's recommendations. Attach the geotextile to the posts in a manner that reduces the potential for geotextile tearing at the staples, wire, or other connection device. Silt fence back-up support for the geotextile in the form of a wire or plastic mesh is dependent on the properties of the geotextile selected for use. If wire or plastic back-up mesh is used, fasten the mesh securely to the up-slope of the posts with the geotextile being up-slope of the mesh back-up support.
    - Bury the geotextile at the bottom of the fence in a trench to a minimum depth of 4 inches below the ground surface. Backfill the trench and tamp the soil in place over the buried portion of the geotextile, such that no flow can pass beneath the fence and scouring can not occur. When wire or polymeric back-up support mesh is used, the wire or polymeric mesh shall extend into the trench a minimum of 3 inches.
    - Drive fence posts in to a minimum depth of 18 inches. A minimum depth of 12 inches is allowed if topsoil or other soft subgrade soil is not present and a minimum depth of 18 inches cannot be reached. Increase fence post depths by 6 inches if the fence is located on slopes of 3H:1V or steeper and the

slope is perpendicular to the fence. If required post depths cannot be obtained, adequately secure the posts by bracing or guying to prevent overturning of the fence due to sediment loading.

- Locate the silt fences on contour as much as possible, except at the ends of the fence, where the fence shall be turned uphill such that the silt fence captures the runoff water and prevents water from flowing around the end of the fence.
- If the fence must cross contours, with the exception of the ends of the fence, place gravel check dams perpendicular to the back of the fence to minimize concentrated flow and erosion along the back of the fence. The gravel check dams shall be approximately 1-foot deep at the back of the fence and be perpendicular to the fence at the same elevation until the top of the check dam intercepts the ground surface behind the fence. The gravel check dams shall consist of crushed surfacing base course, gravel backfill for walls, or shoulder ballast. Locate the gravel check dams every 10 feet along the fence where the fence must cross contours. The slope of the fence line where contours must be crossed shall not be steeper than 3H:1V.
- Use wood, steel or equivalent posts. Wood posts shall have minimum dimensions of 2 inches by 2 inches by 3 feet minimum length, and shall be free of defects such as knots, splits, or gouges. Steel posts shall consist of either size No. 6 rebar or larger; ASTM A120 steel pipe with a minimum diameter of 1-inch; U, T, L, or C shape steel posts with a minimum weight of 1.35 pounds per foot; or other steel posts having equivalent strength and bending resistance to the post sizes listed. The spacing of the support posts shall be a maximum of 6 feet.
- Fence back-up support, if used, shall consist of steel wire with a maximum mesh spacing of 2 inches, or a prefabricated polymeric mesh. The strength of the wire or polymeric mesh shall be equivalent to or greater than 180 pounds grab tensile strength. The polymeric mesh must be as resistant to ultraviolet radiation as the geotextile it supports.

- Specification details for silt fence installation using the slicing method follow. Refer to Figure II-3-29 for slicing method details.
  - The base of both end posts must be at least 2 to 4 inches above the top of the silt fence fabric on the middle posts for ditch checks to drain properly. Use a hand level or string level, if necessary, to mark base points before installation.
  - Install posts 3 to 4 feet apart in critical retention areas and a minimum of 6 feet apart in standard applications.
  - Install posts 24 inches deep on the downstream side of the silt fence, and as close as possible to the fabric, enabling posts to support the fabric from upstream water pressure.
  - Install posts with the nipples facing away from the silt fence fabric.

- Attach the fabric to each post with three ties, all spaced within the top 8 inches of the fabric. Attach each tie diagonally 45 degrees through the fabric, with each puncture at least 1 inch vertically apart. In addition, each tie should be positioned to hang on a post nipple when tightening to prevent sagging.
- Wrap approximately 6 inches of fabric around the end posts and secure with 3 ties.
- No more than 24 inches of a 36-inch fabric is allowed above ground level.
- The rope lock system must be used in all ditch check applications.
- The installation should be checked and corrected for any deviation before compaction. Use a flat-bladed shovel to tuck fabric deeper into the ground, if necessary.
- Compaction is vitally important for effective results. Compact the soil immediately next to the silt fence fabric with the front wheel of a tractor, skid steer, or roller exerting at least 60 pounds per square inch. Compact the upstream side first and then each side twice for a total of four trips.

3.2.14.4 Maintenance Standards

- Repair any damage immediately.
- If concentrated flows are evident uphill of the fence, intercept and convey them to a sediment pond.
- It is important to check the uphill side of the fence for signs of the fence clogging, acting as a barrier to flow, and then causing channelization of flows parallel to the fence. If this occurs, replace the fence or remove the trapped sediment.
- Remove sediment deposits when the deposit reaches approximately one-third the height of the silt fence, or install a second silt fence.
- If the filter fabric (geotextile) has deteriorated due to ultraviolet breakdown, replace it.

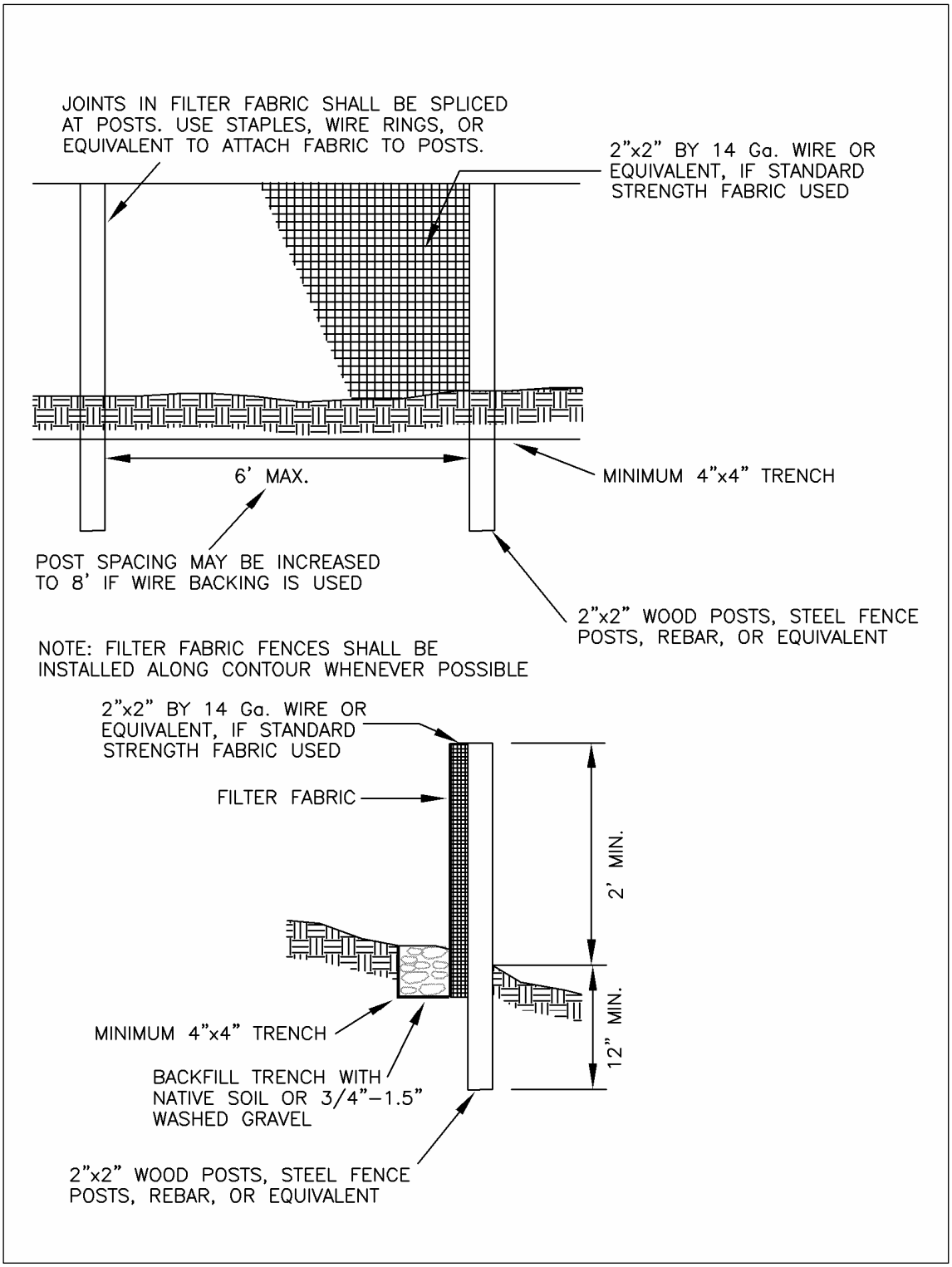

Figure II-3-28. Silt Fence

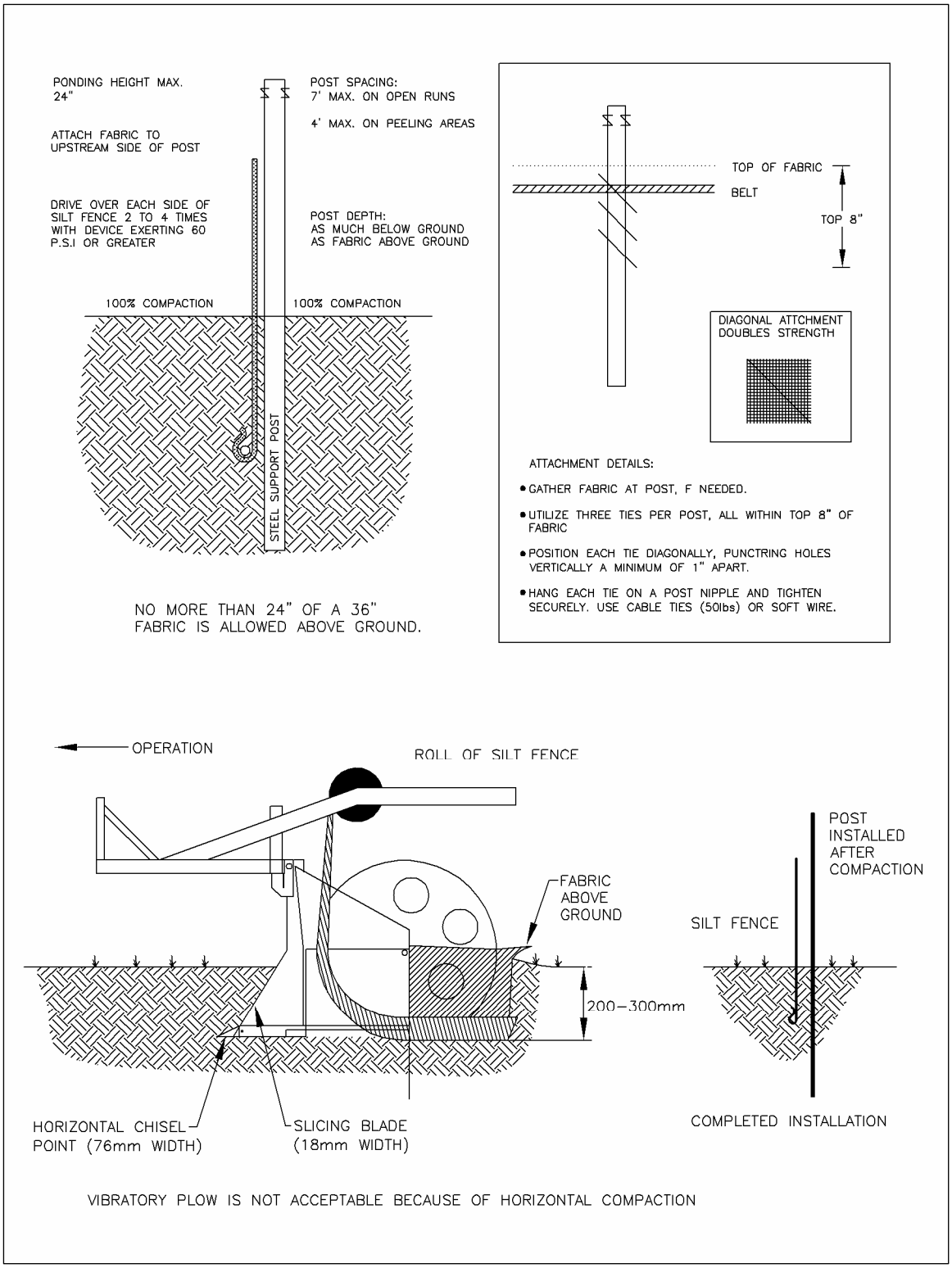

Figure II-3-29. Silt Fence Installation by Slicing

3.2.15 BMP C234: Vegetated Strip

3.2.15.1 Purpose

Vegetated strips reduce the transport of coarse sediment from a construction site by providing a temporary physical barrier to sediment and reducing the runoff velocities of overland flow.

3.2.15.2 Conditions of Use

Vegetated strips may be used downslope of all disturbed areas.

Vegetated strips are not intended to treat concentrated flows, nor are they intended to treat substantial amounts of overland flow. Convey any concentrated flows through the drainage system to a sediment pond. The only circumstance in which overland flow can be treated solely by a strip, rather than by a sediment pond, is when the criteria shown in Table II-3-11 are met.

Table II-3-11. Vegetated Strips

Average Slope	Slope Percent	Flowpath Length
1.5H:1V or less	67% or less	100 feet
2H:1V or less	50% or less	115 feet
4H:1V or less	25% or less	150 feet
6H:1V or less	16.7% or less	200 feet
10H:1V or less	10% or less	250 feet

3.2.15.3 Design and Installation Specifications

The vegetated strip shall consist of a minimum of a 25-foot wide continuous strip of dense vegetation with permeable topsoil. Grass-covered, landscaped areas are generally not adequate because the volume of sediment overwhelms the grass. Ideally, vegetated strips shall consist of undisturbed native growth with a well-developed soil that allows for infiltration of runoff.

- The slope within the strip shall not exceed 4H:1V.
- Delineate the uphill boundary of the vegetated strip with clearing limits.

3.2.15.4 Maintenance Standards

- Seed any areas damaged by erosion or construction activity immediately and protected with mulch.
- If more than 5 feet of the original vegetated strip width has had vegetation removed or is being eroded, install sod.
- If there are indications that concentrated flows are traveling across the vegetated strip, surface water controls must be installed to reduce the flows entering the vegetated strip, or install additional perimeter protection.

3.2.16 BMP C235: Straw Wattles

3.2.16.1 Purpose

Straw wattles are temporary erosion and sediment control barriers consisting of straw that is wrapped in biodegradable tubular plastic or similar encasing material. They reduce the velocity and can spread the flow of rill and sheet runoff, and can capture and retain sediment. Straw wattles are typically 8 to 10 inches in diameter and 25 to 30 feet in length. The wattles are placed in shallow trenches and staked along the contour of disturbed or newly constructed slopes. See Figure II-3-30 for typical construction details.

3.2.16.2 Conditions of Use

- Disturbed areas that require immediate erosion protection.
- Exposed soils during the period of short construction delays.
- On slopes requiring stabilization until permanent vegetation can be established.
- Straw wattles are effective for one to two seasons.
- If conditions are appropriate, wattles can be staked to the ground using live cuttings for added revegetation.

3.2.16.3 Design Criteria

- It is critical that wattles are installed perpendicular to the flow direction and parallel to the slope contour.
- Dig narrow trenches across the slope on contour to a depth of 3 to 5 inches on clay soils and soils with gradual slopes. On loose soils, steep slopes, and areas with high rainfall, dig the trenches to a depth of 5 to 7 inches, or 1/2 to 2/3 of the thickness of the wattle.
- Start building trenches and installing wattles from the base of the slope and work up. Excavated material should be spread evenly along the uphill slope and compacted using hand tamping or other methods.
- Construct trenches at contour intervals of 3 to 30 feet apart depending on the steepness of the slope, soil type, and rainfall. The steeper the slope, the closer together the trenches shall be.
- Install the wattles snugly into the trenches and abut tightly end to end. Do not overlap the ends. Rilling can occur beneath wattles if not properly entrenched, and water can pass between wattles if not tightly abutted.
- Install stakes at each end of the wattle, and at 4-foot centers along entire length of wattle.
- If required, install pilot holes for the stakes using a straight bar to drive holes through the wattle and into the soil.
- At a minimum, wooden stakes should be approximately 3/4 x 3/4 x 24 inches. Live cuttings or 3/8-inch rebar can also be used for stakes.

- Stakes should be driven through the middle of the wattle, leaving 2 to 3 inches of the stake protruding above the wattle.

3.2.16.4 Maintenance Standards

- Wattles may require maintenance to ensure they are in contact with soil and thoroughly entrenched, especially after significant rainfall on steep sandy soils.
- Inspect the slope after significant storms and repair any areas where wattles are not tightly abutted or water has scoured beneath the wattles.

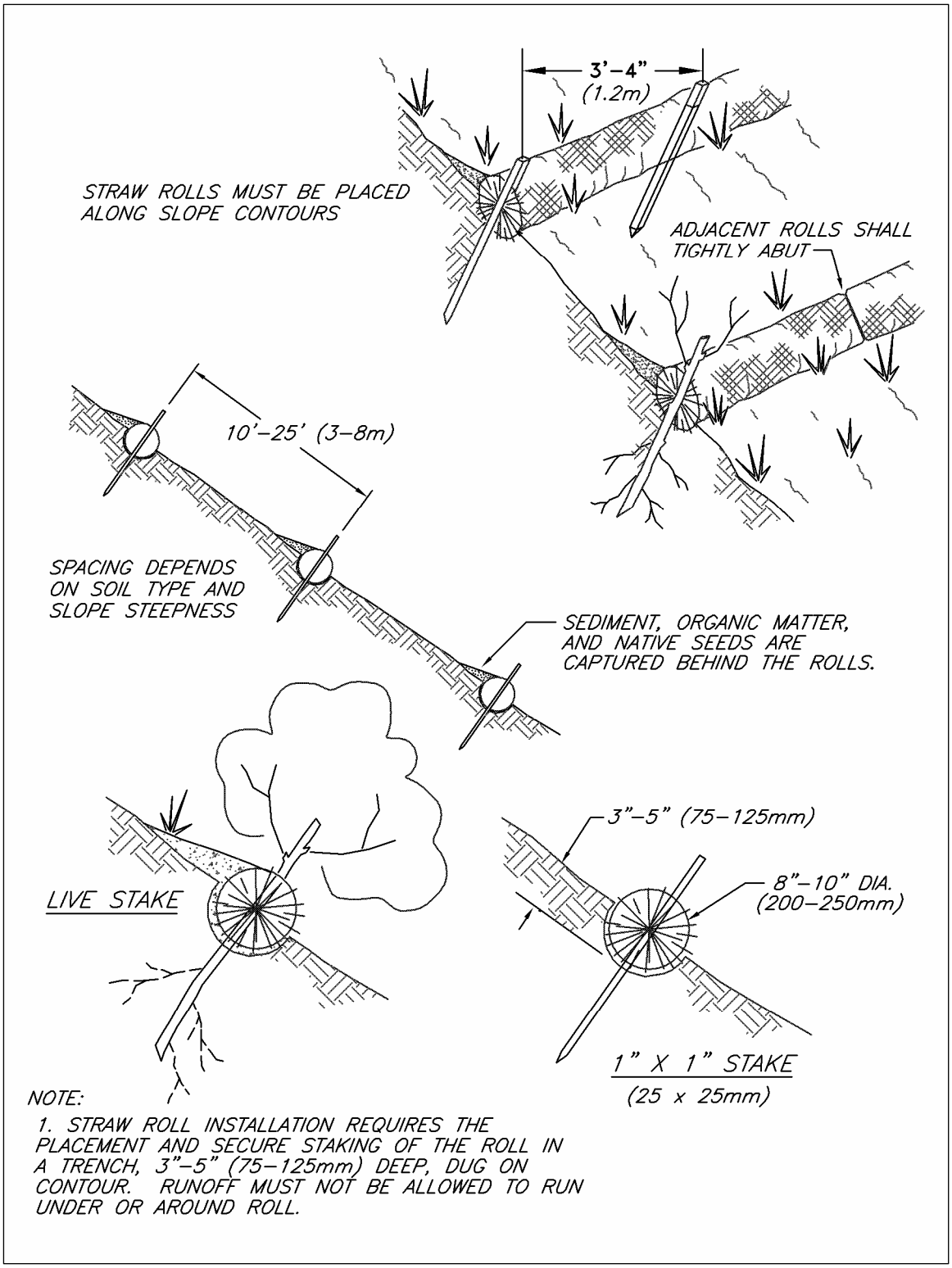

Figure II-3-30. Straw Wattles

3.2.17 BMP C240: Sediment Trap

3.2.17.1 Purpose

A sediment trap is a small temporary ponding area with a gravel outlet used to collect and store sediment from sites cleared and/or graded during construction. Install sediment traps, along with other perimeter controls, before any land disturbance takes place in the drainage area.

3.2.17.2 Conditions of Use

Prior to leaving a construction site, stormwater runoff must pass through a sediment pond or trap or other appropriate sediment removal best management practice. Non-engineered sediment traps may be used on-site prior to an engineered sediment trap or sediment pond to provide additional sediment removal capacity.

Sediment traps are intended for use on sites where the tributary drainage area is less than 3 acres, with no unusual drainage features, and a projected build-out time of six months or less. The sediment trap is a temporary measure (with a design life of approximately 6 months) and shall be maintained until the site area is permanently protected against erosion by the installation of vegetation and/or structures.

Sediment traps and ponds are only effective in removing sediment down to about the medium silt size fraction. Runoff with sediment of finer grades (fine silt and clay) will pass through untreated, emphasizing the need to control erosion to the maximum extent first.

Whenever possible, discharge sediment-laden water into onsite, relatively level, vegetated areas (see BMP C234 – Vegetated Strip). Do not use vegetated wetlands for this purpose. All projects that are constructing permanent detention facilities for runoff quantity control should use the rough-graded or final-graded permanent facilities for traps and ponds. This includes combined facilities and infiltration facilities. When permanent facilities are used as temporary sedimentation facilities, the surface area requirement of a sediment trap or pond must be met. If the surface area requirements are larger than the surface area of the permanent facility, then the trap or pond shall be enlarged to comply with the surface area requirement. The permanent pond shall also be divided into two cells as required for sediment ponds.

Use of infiltration facilities for sedimentation basins during construction tends to clog the soils and reduce their capacity to infiltrate. If infiltration facilities are to be used, the sides and bottom of the facility must only be rough excavated to a minimum of 2 feet above final grade. Final grading of the infiltration facility shall occur only when all contributing drainage areas are fully stabilized. The infiltration pretreatment facility should be fully constructed and used with the sedimentation basin to help prevent clogging.

Either a permanent control structure or the temporary control structure described in BMP C241 - Temporary Sediment Pond can be used. If a permanent control structure is used, it may be advisable to partially restrict the lower orifice with gravel to increase residence time while still allowing dewatering of the pond. A shut-off valve may be added to the control structure to allow complete retention of stormwater in emergency situations. In this case, add an emergency overflow weir.

A skimmer may be used for the sediment trap outlet if approved by the City.

3.2.17.3 Design and Installation Specifications

See Figure II-3-31 and Figure II-3-32 for details.

If permanent runoff control facilities are part of the project, they should be used for sediment retention.

- To determine the sediment trap geometry, first calculate the design surface area (*SA*) of the trap, measured at the invert of the weir. Use the following equation:

  $SA = FS(Q_2/V_S)$

  Where:

  SA = Design surface area, in square feet, of the sediment trap measured at the invert of the weir.

  Q_2 = Design inflow, in cubic feet per second, based on the peak discharge from the developed 2-year runoff event from the contributing drainage area as computed in the hydrologic analysis. The 10-year peak flow shall be used if the project size, expected timing and duration of construction, or downstream conditions warrant a higher level of protection. If no hydrologic analysis is required, the Rational Method may be used.

  Alternatively, Q_2 = Design inflow (cfs) based on the 2-year, 1-hour flowrate predicted by WWHM for the developed (unmitigated site) multiplied by 1.3. Use the 10-year peak flow if the project size, expected timing and duration of construction, or downstream conditions warrant a higher level of protection. Q_{10} is the 10-year, 1-hour flowrate predicted by WWHM multiplied by 1.6.

  V_S = The settling velocity of the soil particle of interest. The 0.02 millimeter (medium silt) particle with an assumed density of 2.65 grams per cubic centimeter has been selected as the particle of interest and has a settling velocity (V_S) of 0.00096 feet per second.

  FS = A safety factor of 2 to account for non-ideal settling.

  Therefore, the equation for computing surface area becomes:

  $SA = 2 \times Q_2/0.00096$ or

  $= 2080\ (Q_2)$

NOTE: Even if permanent facilities are used, they must still have a surface area that is at least as large as that derived from the above formula. If they do not, the pond must be enlarged.

- Smaller sites may use the minimum pond sizes in Table II-3-12 instead of providing calculations.

Table II-3-12. Sediment Trap Sizing

Contributing Area (Acres)	Required Surface Area of Pond (sq. ft.)
1/8 acre or less	130
¼ acre or less	260
½ acre or less	520
¾ acre or less	780
1 acre or less	1040

- To aid in determining sediment depth, all sediment traps shall have a staff gauge with a prominent mark 1-foot above the bottom of the trap.
- Sediment traps may not be feasible on utility projects due to the limited work space or short-term nature of the work. Portable tanks may be used in place of sediment traps for utility projects.
- The basic geometry of the pond can now be determined using the following design criteria:
  - Required surface area SA (from the equation above) at top of riser.
  - Minimum 3.5-foot depth from top of riser to bottom of pond.
  - Maximum 3H:1V interior side slopes and maximum 2H:1V exterior slopes. The interior slopes can be increased to a maximum of 2H:1V if fencing is provided at or above the maximum water surface.
  - One foot of freeboard between the top of the riser and the crest of the emergency spillway.
  - Flat bottom.
  - Minimum 1-foot deep spillway.
  - Length-to-width ratio between 3:1 and 6:1.

3.2.17.4 Maintenance Standards

- Remove sediment from the trap when it reaches 1-foot in depth.
- Repair any damage to the pond embankments or slopes.

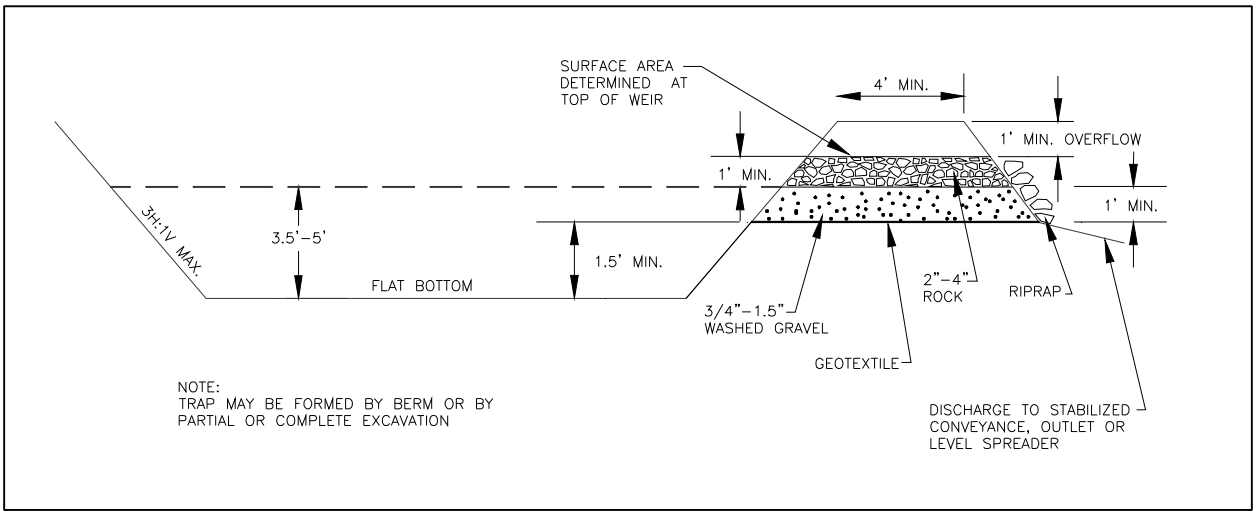

Figure II-3-31. Cross-Section of a Sediment Trap

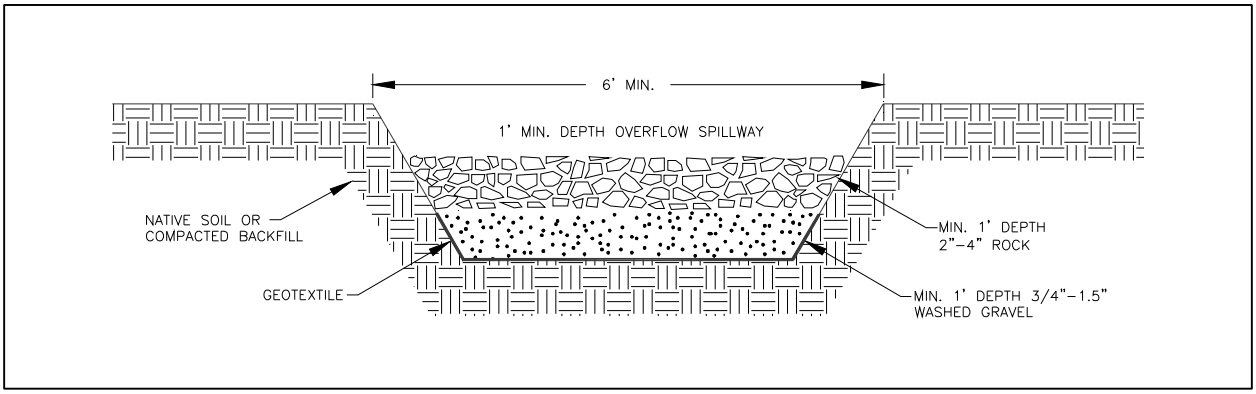

Figure II-3-32. Sediment Trap Outlet

3.2.18 BMP C241: Temporary Sediment Pond

3.2.18.1 Purpose

Sediment ponds remove sediment from runoff originating from disturbed areas of the site. Sediment ponds are typically designed to remove sediment no smaller than medium silt (0.02 mm). Consequently, they usually reduce turbidity only slightly.

3.2.18.2 Conditions of Use

Prior to leaving a construction site, stormwater runoff must pass through a sediment pond or other appropriate sediment removal best management practice.

Use a sediment pond where the contributing drainage area is 3 acres or more. Ponds must be used in conjunction with erosion control practices to reduce the amount of sediment flowing into the basin.

3.2.18.3 Design and Installation Specifications

Only install sediment basins on sites where failure of the structure would not result in loss of life, damage to homes or buildings, or interruption of use or service of public roads or utilities. Also, sediment traps and ponds are attractive to children and can be very dangerous. Compliance with local ordinances regarding health and safety must be addressed. If fencing of the pond is required, show the type of fence and its location on the ESC plan.

- Structures having a maximum storage capacity at the top of the dam of 10 acre-feet (435,600 cubic feet) or more are subject to the Washington Dam Safety Regulations (Chapter 173-175 WAC).
- See Figure II-3-33, Figure II-3-34 and Figure II-3-35 for details.
- If permanent detention facilities are part of the project, they may be used for sediment retention. The surface area requirements of the sediment basin must be met. This may require enlarging the permanent basin to comply with the surface area requirements. If a permanent control structure is used, it may be advisable to partially restrict the lower orifice with gravel to increase residence time while still allowing dewatering of the basin.
- Use of infiltration facilities for sedimentation basins during construction tends to clog the soils and reduce their capacity to infiltrate. If infiltration facilities are to be used, the sides and bottom of the facility must only be rough excavated to a minimum of 2 feet above final grade. Final grading of the infiltration facility shall occur only when all contributing drainage areas are fully stabilized. The infiltration pretreatment facility should be fully constructed and used with the sedimentation basin to help prevent clogging.

Determining Pond Geometry

- Determine the required surface area at the top of the riser pipe with the equation:

  SA = $2 \times Q_2/0.00096$ or

  SA = $2080\ (Q_2)$

  Where:

  SA = Design surface area, in square feet, of the sediment trap measured at the invert of the weir.

  Q_2 = Design inflow, in cubic feet per second, based on the peak discharge from the developed 2-year runoff event from the contributing drainage area as computed in the hydrologic analysis. The 10-year peak flow shall be used if the project size, expected timing and duration of construction, or downstream conditions warrant a higher level of protection. If no hydrologic analysis is required, the Rational Method may be used.

  Alternatively, Q_2 = Design inflow (cfs) based on the 2-year, 15-minute flowrate predicted by WWHM for the developed (unmitigated site). Use the 10-year peak flow if the project size, expected timing and duration of construction, or downstream conditions warrant a higher level of protection. Q_{10} is the 10-year, 15-minute flowrate predicted by WWHM. Note: WWHM 2 and 3 do not use 15 minute time steps for 2 or 10 year flow rates, they use 1-hour time steps. The 2-year flowrate predicted by WWHM 2 or 3 must be multiplied by 1.3 and the 10-year flowrate predicted by WWHM 2 or 3 must be multiplied by 1.6. Currently it is unknown what time steps future versions of WWHM will use.

- See BMP C240 for more information on the derivation of the surface area calculation.
- The basic geometry of the pond can now be determined using the following design criteria:
  - Required surface area SA (from the equation above) at top of riser.
  - Minimum 3.5-foot depth from top of riser to bottom of pond.
  - Maximum 3H:1V interior side slopes and maximum 2H:1V exterior slopes. The interior slopes can be increased to a maximum of 2H:1V if fencing is provided at or above the maximum water surface.
  - One foot of freeboard between the top of the riser and the crest of the emergency spillway.
  - Flat bottom.
  - Minimum 1-foot deep spillway.
  - Length-to-width ratio between 3:1 and 6:1.

Sizing of Discharge Mechanisms

The outlet for the basin consists of a combination of principal and emergency spillways. These outlets must pass the peak runoff expected from the contributing drainage area for a 100-year storm. If, due to site conditions and basin geometry, a separate emergency spillway is not feasible, the principal spillway must pass the entire peak runoff expected from the 100-year storm. However, an attempt to provide a separate emergency spillway should always be made. The runoff calculations shall be based on the site conditions during construction. The flow through the dewatering orifice cannot be utilized when calculating the 100-year storm elevation because of its potential to become clogged; therefore, available spillway storage must begin at the principal spillway riser crest.

The principal spillway designed by the procedures contained in this standard will result in some reduction in the peak rate of runoff. However, the riser outlet design will not adequately control the basin discharge to the predevelopment discharge limitations as stated in Minimum Requirement #7: Flow Control. However, if the basin for a permanent stormwater detention pond is used for a temporary sedimentation basin, the control structure for the permanent pond can be used to maintain predevelopment discharge limitations. The size of the basin, the expected life of the construction project, the anticipated downstream effects, and the anticipated weather conditions during construction should be considered to determine the need of additional discharge control. See Figure II-3-36 for riser inflow curves.

Principal Spillway: Determine the required diameter for the principal spillway (riser pipe). The diameter shall be the minimum necessary to pass the pre-developed 10-year peak flow (Q_{10}). Use Figure II-3-36 to determine this diameter (*h* = 1-foot).

NOTE: A permanent control structure may be used instead of a temporary riser.

Emergency Overflow Spillway: Determine the required size and design of the emergency overflow spillway for the developed 100-year peak flow using the method contained in Volume III. Alternatively, the 100-year peak flow as determined by WWHM multiplied by 1.6 can be used to size the emergency overflow.

Dewatering Orifice: Determine the size of the dewatering orifice(s) (minimum 1-inch diameter) using a modified version of the discharge equation for a vertical orifice and a basic equation for the area of a circular orifice. Determine the required area of the orifice with the following equation:

$$A_o = \frac{A_s (2h)^{0.5}}{0.6\text{x}3600Tg^{0.5}}$$

Where:

A_O	=	orifice area (square feet)
A_S	=	pond surface area (square feet)
h	=	head of water above orifice (height of riser in feet)
T	=	dewatering time (24 hours)
g	=	acceleration of gravity (32.2 feet per second squared)
D	=	orifice diameter (inches)

Convert the required surface area to the required diameter *D* of the orifice:

$$D = 24\text{x}\sqrt{\frac{A_o}{\pi}} = 13.54\text{x}\sqrt{A_o}$$

The vertical, perforated tubing connected to the dewatering orifice must be at least 2 inches larger in diameter than the orifice to improve flow characteristics. The size and number of perforations in the tubing shall be large enough so the tubing does not restrict flow. The orifice shall control the flow rate.

Additional Design Specifications

The **pond shall be divided** into two roughly equal volume cells by a permeable divider that will reduce turbulence while allowing movement of water between cells. The divider shall be at least one-half the height of the riser and a minimum of one foot below the top of the riser. Wire-backed, 2- to 3-foot high, extra strength filter fabric supported by treated 4"x4"s can be used as a divider. If the pond is more than 6 feet deep, a different mechanism must be proposed. A riprap embankment is one acceptable method of separation for deeper ponds. Other designs that satisfy the intent of this provision are allowed as long as the divider is permeable, structurally sound, and designed to prevent erosion under or around the barrier.

To aid in determining sediment depth, prominently mark **one-foot intervals** on the riser.

If an **embankment height** of more than 6 feet is proposed, the pond must comply with the criteria contained in Volume III regarding dam safety for detention BMPs.

The most common structural failure of sedimentation basins is caused by piping. Piping refers to two phenomena: (1) water seeping through fine-grained soil, eroding the soil grain by grain and forming pipes or tunnels and (2) water under pressure flowing upward through a granular soil with a head of sufficient magnitude to cause soil grains to lose contact and capability for support.

The most critical construction sequences to prevent piping will be:

- Tight connections between the riser and barrel and other pipe connections.
- Adequate anchoring of the riser.
- Proper soil compaction of the embankment and riser footing.
- Proper construction of anti-seep devices.

3.2.18.4 Maintenance Standards

- Remove sediment from the pond when it reaches 1–foot in depth.
- Repair any damage to the pond embankments or slopes.

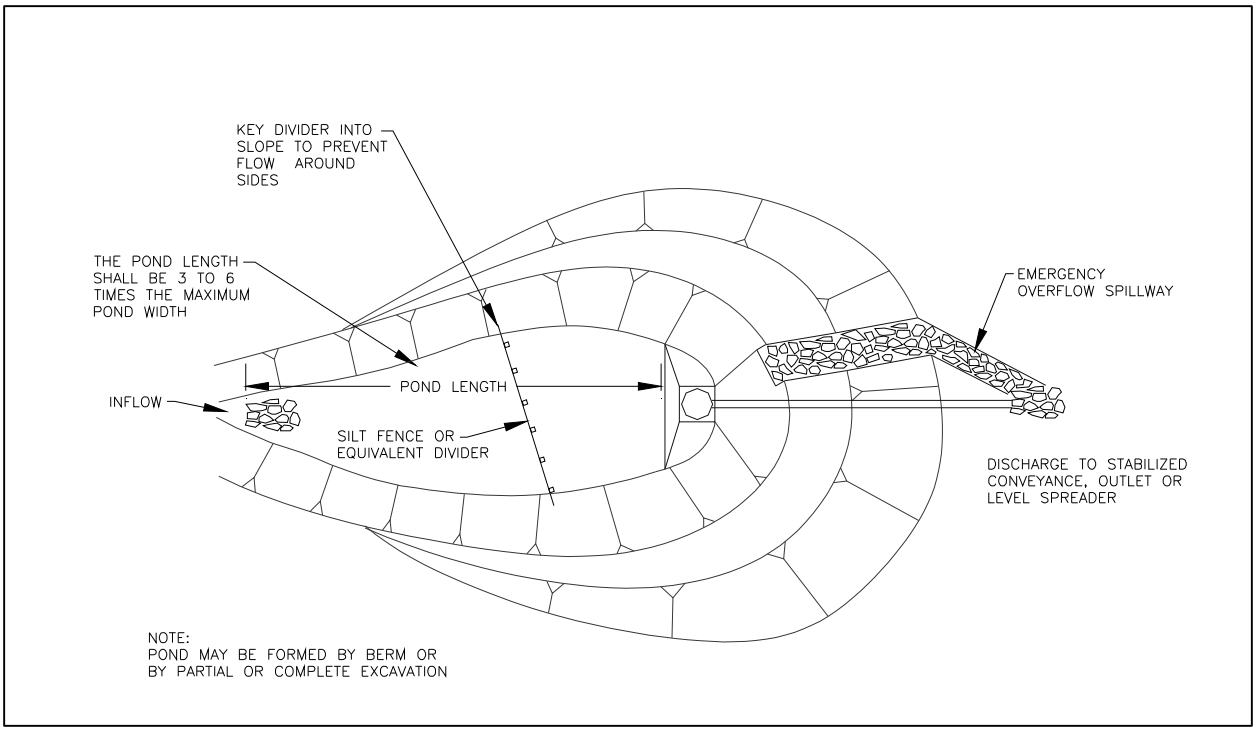

Figure II-3-33. Sediment Pond

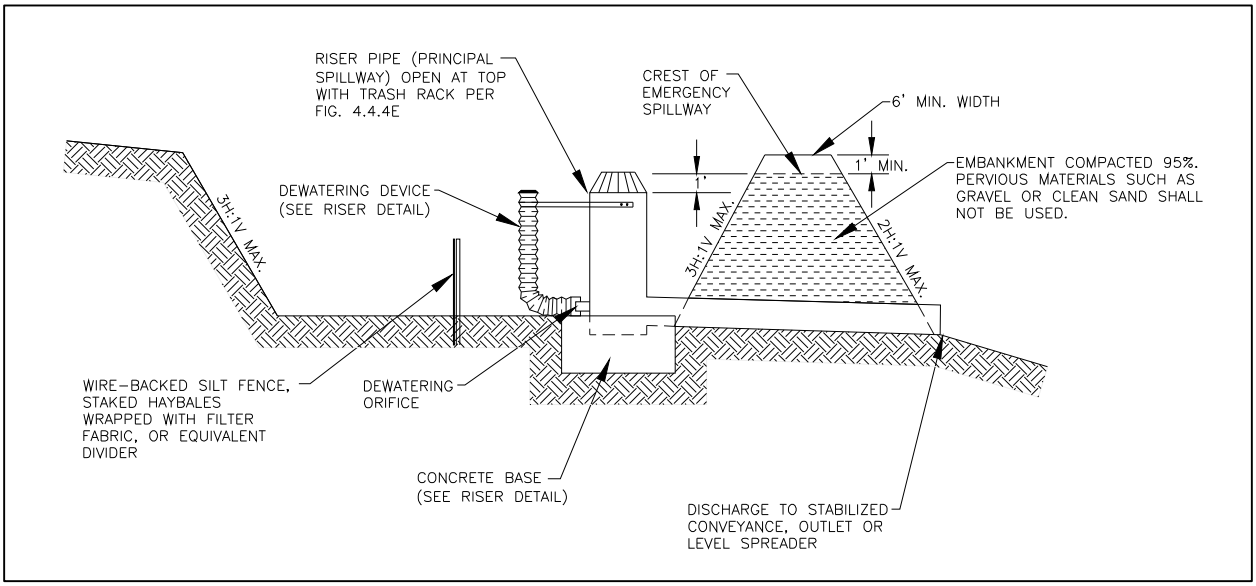

Figure II-3-34. Sediment Pond Cross Section

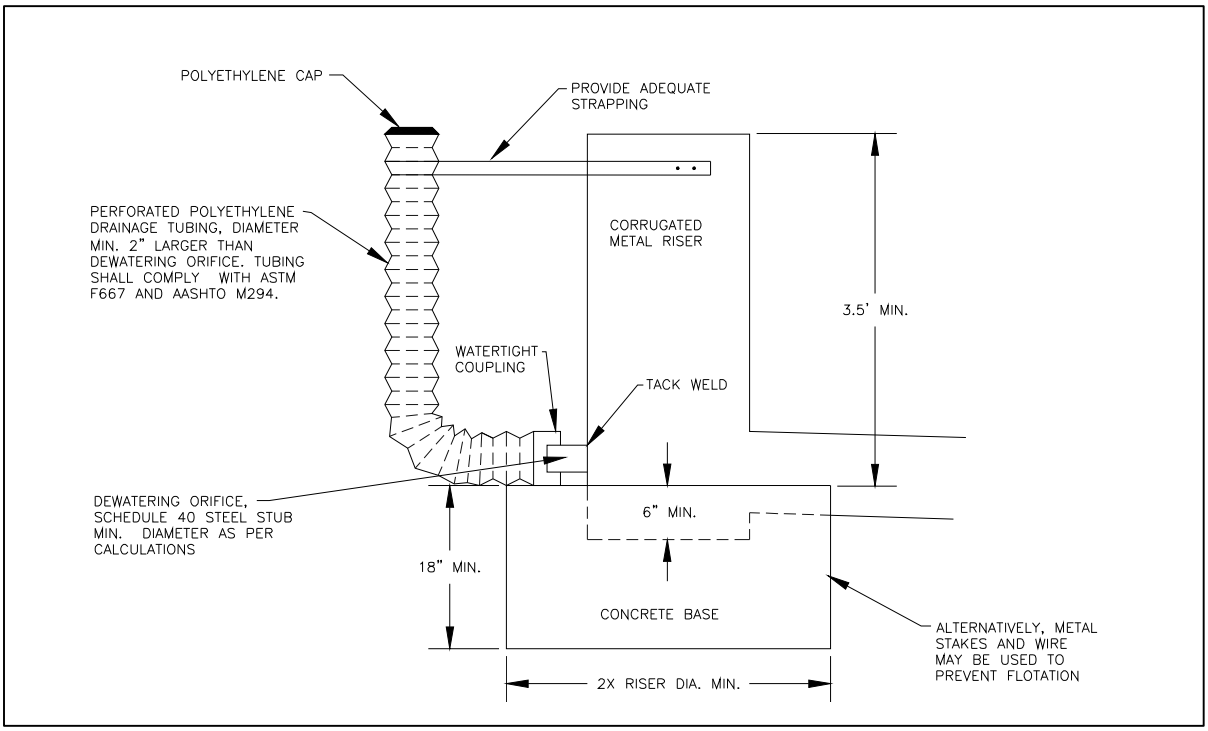

Figure II-3-35. Sediment Pond Riser Detail

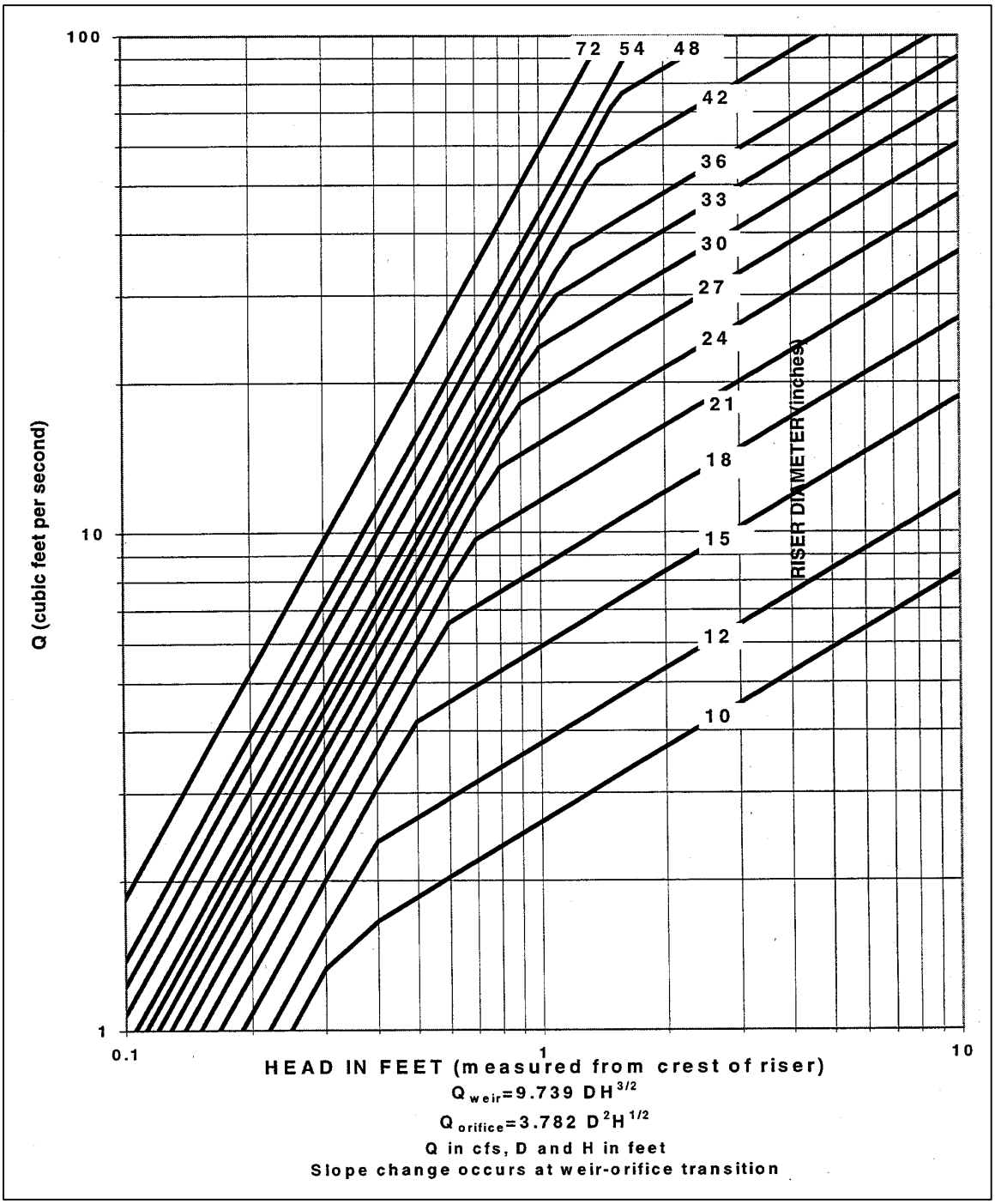

Figure II-3-36. Riser Inflow Curves

3.2.19 BMP C250: Construction Stormwater Chemical Treatment

3.2.19.1 Purpose

This BMP applies when using stormwater chemicals in batch treatment or flow-through treatment.

Turbidity is difficult to control once fine particles are suspended in stormwater runoff from a construction site. Sedimentation ponds are effective at removing larger particulate matter by gravity settling, but are ineffective at removing smaller particulates such as clay and fine silt. Traditional erosion and sediment control BMPs may not be adequate to ensure compliance with the water quality standards for turbidity in the receiving water.

3.2.19.2 Conditions of Use

Formal written approval from Ecology and the City is required for the use of chemical treatment regardless of site size. When approved, include the chemical treatment system in the Stormwater Pollution Prevention Plan (SWPPP).

3.2.19.3 Design and Installation Specifications

See Appendix B for background information on chemical treatment.

Criteria for Chemical Treatment Product Use

Chemically treated stormwater discharged from construction sites must be nontoxic to aquatic organisms. The Chemical Technology Assessment Protocol (CTAPE) must be used to evaluate chemicals proposed for stormwater treatment. **Only chemicals approved by Ecology under the CTAPE may be used for stormwater treatment.** The approved chemicals, their allowable application techniques (batch treatment or flow-through treatment), allowable application rates, and conditions of use can be found at the Department of Ecology Emerging Technologies website: http://www.ecy.wa.gov/programs/wq/stormwater/newtech/index.html

Treatment System Design Considerations

The design and operation of a chemical treatment system should take into consideration the factors that determine optimum, cost-effective performance. It is important to recognize the following:

- Only Ecology approved chemicals may be used and must follow approved dose rates.
- The pH of the stormwater must be in the proper range for the polymers to be effective, which is typically 6.5 to 8.5.
- The coagulant must be mixed rapidly into the water to ensure proper dispersion.
- A flocculation step is important to increase the rate of settling, to produce the lowest turbidity, and to keep the dosage rate as low as possible.
- Too little energy input into the water during the flocculation phase results in flow that are too small and/or insufficiently dense. Too much energy can rapidly destroy floc as it is formed.

- Care must be taken in the design of the withdrawal system to minimize outflow velocities and to prevent floc discharge. Discharge from a batch treatment system should be directed through a physical filter such as a vegetated swale that would catch any unintended floc discharge. Currently, flow-through systems always discharge through the chemically enhanced sand filtration system.
- System discharge rates must take into account downstream conveyance integrity.

Polymer Batch Treatment Process Description

A batch chemical treatment system consists of the stormwater collection system (either temporary diversion or the permanent site drainage system), an untreated stormwater storage pond, pumps, a chemical feed system, treatment cells, and interconnecting piping.

The batch treatment system shall use a minimum of two lined treatment cells in addition to the untreated stormwater storage pond. Multiple treatment cells allow for clarification of treated water while other cells are being filled or emptied. Treatment cells may be ponds or tanks. Ponds with constructed earthen embankments greater than six feet high require special engineering analyses.

Stormwater is collected at interception point(s) on the site and is diverted by gravity or by pumping to an untreated stormwater storage pond or other untreated stormwater holding area. The stormwater is stored until treatment occurs. It is important that the holding pond be large enough to provide adequate storage.

The first step in the treatment sequence is to check the pH of the stormwater in the untreated stormwater storage pond. The pH is adjusted by the application of carbon dioxide or a base until the stormwater in the storage pond is within the desired pH range, 6.5 to 8.5. When used, carbon dioxide is added immediately downstream of the transfer pump. Typically sodium bicarbonate (baking soda) is used as a base, although other bases may be used. When needed, base is added directly to the untreated stormwater storage pond. The stormwater is recirculated with the treatment pump to provide mixing in the storage pond. Initial pH adjustments should be based on daily bench tests. Further, pH adjustments can be made at any point in the process.

Once the stormwater is within the desired pH range (dependant on polymer being used), the stormwater is pumped from the untreated stormwater storage pond to a treatment cell as polymer is added. The polymer is added upstream of the pump to facilitate rapid mixing.

After polymer addition, the water is kept in a lined treatment cell for clarification of the sediment-floc. In a batch mode process, clarification typically takes from 30 minutes to several hours. Prior to discharge samples are withdrawn for analysis of pH and turbidity. If both are acceptable, the treated water is discharged.

Several configurations have been developed to withdraw treated water from the treatment cell. The original configuration is a device that withdraws the treated water from just beneath the water surface using a float with adjustable struts that prevent the float from settling on the cell bottom (Figure II-3-37). This reduces the possibility of picking up sediment-floc from the bottom of the pond. The struts are usually set at a minimum clearance of about 12 inches; that is, the float will come within 12 inches of the bottom of the cell. Other systems have used vertical guides or cables which constrain

the float, allowing it to drift up and down with the water level. More recent designs have an H-shaped array of pipes, set on the horizontal.

Figure II-3-37. Floating Platform with Struts

This scheme provides for withdrawal from four points rather than one. This configuration reduces the likelihood of sucking settled solids from the bottom. It also reduces the tendency for a vortex to form. Inlet differs, a long floating or fixed pipe with many small holes in it, are also an option.

Safety is a primary concern. Design should consider the hazards associated with operations, such as sampling. Facilities should be designed to reduce slip hazards and drowning. Tanks and ponds should have life rings, ladder, or steps extending from the bottom to the top.

Polymer Flow-Through Treatment Process Description

At a minimum, a flow-through chemical treatment system consists of the stormwater collection system (either temporary diversion or the permanent site drainage system), an untreated stormwater storage pond, and the chemically enhanced sand filtration system.

Stormwater is collected at interception point(s) on the site and is diverted by gravity or by pumping to an untreated stormwater storage pond or other untreated stormwater holding area. The stormwater is stored until treatment occurs. It is important that the holding pond be large enough to provide adequate storage.

Stormwater is then pumped from the untreated stormwater storage pond to the chemically enhanced sand filtration system where polymer is added. Adjustments to pH may be necessary before chemical addition. The sand filtration system continually monitors the stormwater for turbidity and pH. If the

discharge water is ever out of an acceptable range for turbidity or pH, the water is recycled to the untreated stormwater pond where it can be retreated.

Equipment

For batch treatment and flow-through treatment, the following equipment should be located in a lockable shed:

- The chemical injector
- Secondary non-corrosive containment for acid, caustic, buffering compound, and treatment chemical
- Emergency shower and eyewash
- Monitoring equipment

System Sizing

Certain sites are required to implement flow control for the developed sites. These sites must also control stormwater release rates during construction. Generally, these are sites that discharge stormwater directly or indirectly, through a conveyance system, into a freshwater. System sizing is dependent on flow control requirements.

Sizing Criteria for Batch Treatment Systems for Flow Control Exempt Water Bodies

- The total volume of the untreated stormwater storage pond and treatment ponds or tanks must be large enough to treat the volume of stormwater that is produced during multiple day storm events. At a minimum, size the untreated storage pond to hold 1.5 times the runoff volume of the 10-year, 24-hour storm event. Provide bypass around the chemical treatment system to accommodate extreme storm events. Calculate runoff volumes using the methods in Volume III, Chapter 3. Use worst-case land cover conditions (i.e., producing the most runoff) for analyses (in most cases, this would be the land cover conditions just prior to final landscaping).
- Primary settling should be encouraged in the untreated stormwater storage pond. A forebay with access for maintenance is beneficial.
- There are two opposing considerations in sizing the treatment cells. A larger cell is able to treat a larger volume of water each time a batch is processed. However, the larger the cell the longer the time is required to empty the cell. A larger cell may also be less effective at flocculation and therefore require a longer settling time. The simplest approach to sizing the treatment cell is to multiply the allowable discharge flowrate times the desired drawdown time. A 4-hour drawdown time allow one batch per cell per 8-hour work period, given 1 hour of flocculation followed by 2 hours of settling.
- If the discharge is directly to a lake, flow control exempt receiving water, or to an infiltration system, there is no discharge flow limit.
- Ponds sized for flow control water bodies must at a minimum meet the sizing criteria for flow control exempt waters.

Sizing Criteria for Flow-Through Treatment Systems for Flow Control Exempt Water Bodies:

- Sites that must implement flow control for the developed site condition must also control stormwater release rates during construction. Construction site stormwater discharges shall not exceed the discharge durations of the predeveloped condition for the range of predeveloped discharge rates from ½ of the 2-year flow through the 10-year flow as predicted by WWHM. The predeveloped condition to be matched shall be the land cover condition immediately prior to the development project. This restriction on release rates can affect the size of the storage pond and treatment cells.
- The following is how WWHM can be used to determine the release rates from the chemical treatment systems:
    1. Determine the predeveloped flow durations to be matched by entering the land use area under the "Predeveloped" scenario in WWHM. The default flow range is from ½ of the 2-year flow through the 10-year flow.
    2. Enter the post developed land use area in the "Developed Unmitigated" scenario in WWHM.
    3. Copy the land use information for the "Developed Unmitigated" to "Developed Mitigated" scenario.
    4. While in the "Developed Mitigated" scenario, add a pond element under the basin element containing the post-developed land use areas. This pond element represents information on the available untreated stormwater storage and discharge from the chemical treatment system. In cases where the discharge from the chemical treatment is controlled by a pump, a stage/storage/discharge (SSD) table representing the pond must be generated outside WWHM and imported into WWHM. WWHM can route the runoff from the post-developed condition through this SSD table (the pond) and determine compliance with the flow duration standard. This would be an iterative design procedure where if the initial SSD table proved to be inadequate, the designer would have to modify the SSD table outside WWHM and reimport in WWHM and route the runoff through it again. The iteration will continue until a pond that complies with the flow duration standard is correctly sized.

Notes on SSD table characteristics:

- The pump discharge rate would likely be initially set at just below ½ of the 2-year flow from the pre-developed condition. As runoff coming into the untreated stormwater storage pond increases and the available untreated stormwater storage volume gets used up, it would be necessary to increase the pump discharge rate above ½ of the 2-year. The increase(s) above ½ of the 2-year must be such that they provide some relief to the untreated stormwater storage needs but at the same time will not cause violations of the flow duration standard at the higher flows. The final design SSD table will identify the appropriate pumping rates and the corresponding stage and storages.
- When building such a flow control system, the design must ensure that any automatic adjustments to the pumping rates will be as a result of the changes to the available storage in accordance with the final design SSD table.

- It should be noted that the above procedures would be used to meet the flow control requirements. The chemical treatment system must be able to meet the runoff treatment requirements. It is likely that the discharge flowrate of ½ of the 2-year or more may exceed the treatment capacity of the system. If that is the case, the untreated stormwater discharge rate(s) (i.e., influent to the treatment system) must be reduced to allow proper treatment. Any reduction in the flows will likely result in the need for a larger untreated stormwater storage volume.
- If the discharge is to a municipal storm drainage system, the allowable discharge rate may be limited by the capacity of the public system. It may be necessary to clean the municipal storm drainage system prior to the start of the discharge to prevent scouring solids from the drainage system. If the municipal storm drainage system discharges to a water body that is not flow control exempt, the project site is subject to flow control requirements.
- If system design does not allow you to discharge at the slower rates as described above and if the site had a retention or detention pond that will serve the planned development, the discharge from the treatment system may be directed to the permanent retention/detention pond to comply with the flow control requirement. In this case, the untreated stormwater storage pond and treatment system will be sized according to the sizing criteria for flow-through system for flow control exempt water bodies described earlier except all discharge (water passing through the treatment system and stormwater bypassing the treatment system) will be directed into the permanent retention/detention pond. If site constraints make locating the untreated stormwater storage pond difficult, the permanent retention/detention pond may be divided to serve as the untreated stormwater storage pond and the post-treatment flow control pond. A berm or barrier must be used in this case so the untreated water does not mix with the treated water. Both untreated stormwater storage requirements, and adequate post-treatment flow control must be achieved. The post-treatment flow control pond's revised dimensions must be entered into the WWHM and the WWHM must be run to confirm compliance with the flow control requirements.

3.2.19.4 Monitoring

Conduct the following monitoring. Record test results on a daily log kept on site. Additional testing may be required by the NPDES permit based on site conditions.

Operational Monitoring:

- Total volume treated and discharged
- Flow must be continuously monitored and recorded at not greater than 15-minute intervals
- Type and amount of chemical used for pH adjustment, if any
- Quantity of chemical used for treatment
- Settling time

Compliance Monitoring

- Influent and effluent pH and turbidity must be continuously monitored and recorded at not greater than 15-minute intervals.
- pH and turbidity of the receiving water

Biomonitoring

- Treated stormwater must be non-toxic to aquatic organisms. Treated stormwater must be tested for aquatic toxicity or residual chemical content. Frequency of biomonitoring will be determined by Ecology.
- Residual chemical tests must be approved by Ecology prior to their use.
- If testing treated stormwater for aquatic toxicity, you must test for acute (lethal) toxicity. Bioassays shall be conducted by a laboratory accredited by Ecology, unless otherwise approved by Ecology. Acute toxicity tests shall be conducted per the CTAPE protocol.

Discharge Compliance

- **Prior to discharge, treated stormwater must be sampled and tested for compliance with pH and turbidity limits**. These limits may be established by the Construction Stormwater General Permit, or a site-specific discharge permit. Sampling and testing for other pollutants may also be necessary at some sites. pH must be within the range of 6.5 to 8.5 standard units and not cause a change in the pH of the receiving water of more than 0.2 standard units.
- Treated stormwater samples and measurements shall be taken from the discharge pipe or another location representative of the nature of the treated stormwater discharge. Samples used for determining compliance with the water quality standards in the receiving water shall not be taken from the treatment pond prior to decanting. Compliance with the water quality standards is determined in the receiving water.

Operator Training

- Each contractor who intends to use chemical treatment shall be trained by an experienced contractor on an active site.

Standard BMPs

- Surface stabilization BMPs should be implemented on site to prevent significant erosion. All sites shall use a truck wheel wash to prevent tracking of sediment off site.

Sediment Removal and Disposal:

- Remove sediment from the storage or treatment cells as necessary. Typically, sediment removal is required at least once during a wet season and at the decommissioning of the cells. Sediment remaining in the cells between batches may enhance the settling process and reduce the required chemical dosage.
- Sediment that is known to be non-toxic may be incorporated into the site away from drainages.

3.2.20 BMP C251: Construction Stormwater Filtration

3.2.20.1 Purpose

Filtration removes sediment from runoff originating from disturbed areas of the site.

3.2.20.2 Conditions of Use

Traditional BMPs used to control soil erosion and sediment loss from sites under development may not be adequate to ensure compliance with the water quality standard for turbidity in the receiving water. Filtration may be used in conjunction with gravity settling to remove sediment as small as fine silt (0.5 µm). The reduction in turbidity will be dependent on the particle size distribution of the sediment in the stormwater. In some circumstances, sedimentation and filtration may achieve compliance with the water quality standard for turbidity.

The use of construction stormwater filtration does not require approval from Ecology as long as treatment chemicals are not used. Filtration in conjunction with polymer treatment requires testing under the Chemical Technology Assessment Protocol – Ecology (CTAPE) before it can be initiated. Approval from the appropriate regional Ecology office must be obtained at each site where polymers use is proposed prior to use. For more guidance on stormwater chemical treatment see BMP C250.

3.2.20.3 Background Information

Filtration with sand media has been used for over a century to treat water and wastewater. The use of sand filtration for treatment of stormwater has developed recently, generally to treat runoff from streets, parking lots, and residential areas. The application of filtration to construction stormwater is currently under development.

3.2.20.4 Design and Installation Specifications

Two types of filtration systems may be applied to construction stormwater treatment: rapid and slow. Rapid sand filters are the typical system used for water and wastewater treatment. They can achieve relatively high hydraulic flow rates, on the order of 2 to 20 gpm/sf, because they have automatic backwash systems to remove accumulated solids. In contrast, slow sand filters have very low hydraulic rates, on the order of 0.02 gpm/sf, because they do not have backwash systems. To date, slow sand filtration has generally been used to treat stormwater. Slow sand filtration is mechanically simple in comparison to rapid sand filtration but requires a much larger filter area.

Filtration Equipment

Sand media filters are available with automatic backwashing features that can filter to 50 µm particle size. Screen or bag filters can filter down to 5 µm. Fiber wound filters can remove particles down to 0.5 µm. Filters should be sequenced from the largest to the smallest pore opening. Sediment removal efficiency will be related to particle size distribution in the stormwater.

Treatment Process Description

Stormwater is collected at interception point(s) on the site and is diverted to an untreated stormwater sediment pond or tank for removal of large sediment and storage of the stormwater before it is treated by the filtration system. The stormwater is pumped from the trap, pond, or tank through the

filtration system in a rapid sand filtration system. Slow sand filtration systems are designed as flow through systems using gravity.

Sizing Criteria for Flow-Through Treatment Systems for Flow Control Exempt Water Bodies

When sizing storage ponds or tanks for flow-through systems for flow control exempt water bodies, the treatment system capacity should be a factor. The untreated stormwater storage pond or tank should be sized to hold 1.5 times the runoff volume of the 10-year, 24-hour storm event minus the treatment system flowrate for an 8-hour period. For a chitosan-enhanced sand filtration system, the treatment flowrate should be sized using a hydraulic loading rate between 6-8 gpm/ft². Other hydraulic loading rates may be more appropriate for other systems. Bypass should be provided around the chemical treatment system to accommodate extreme storms. Runoff volumes shall be calculated using the methods presented in Volume III, Chapter 3. Worst-case conditions (i.e., producing the most runoff) should be used for analyses (most likely conditions present prior to final landscaping).

Sizing Criteria for Flow Control Waters:

Sites that must implement flow control for the developed site condition must also control stormwater release rates during construction. Construction site stormwater discharges shall not exceed the discharge durations of the pre-developed condition for the range of pre-developed discharge rates from ½ of the 2-year flow through the 10-year flow as predicted by WWHM. The pre-developed condition to be matched shall be the land cover condition immediately prior to the development project. This restriction on release rates will affect the size of the sediment pond, the filtration system, and the flow rate through the filter system.

The following is how WWHM can be used to determine the release rates from the filtration systems:

1. Determine the pre-developed flow durations to be matched by entering the land use area under the “Pre-developed” scenario in WWHM. The default flow range is from ½ of the 2-year flow through the 10-year flow.
2. Enter the post developed land use area in the “Developed Unmitigated” scenario in WWHM.
3. Copy the land use information from the “Developed Unmitigated” to “Developed Mitigated” scenario.
4. There are two possible ways to model stormwater filtration systems:
   a. The stormwater filtration system uses a storage pond/tank and the discharge from this pond/tank is pumped to one or more filters. In-line filtration chemicals would be added to the flow right after the pond/tank and before the filter(s). Because the discharge is pumped, WWHM cannot generate a stage/storage/discharge (SSD) table for this system. This system is modeled the same way as described in BMP C250 and is as follows:

      While in the “Developed Mitigated” scenario, add a pond element under the basin element containing the post-developed land use areas. This pond element represents information on the available storage and discharge from the filtration system. In cases where the discharge from the filtration system is controlled by a pump, a stage/storage/discharge (SSD) table representing the pond must be generated outside WWHM

and imported into WWHM. WWHM can route the runoff from the post-developed condition through this SSD table (the pond) and determine compliance with the flow duration standard. This would be an iterative design procedure where if the initial SSD table proved to be out of compliance, the designer would have to modify the SSD table outside WWHM and re-import in WWHM and route the runoff through it again. The iteration will continue until a pond that enables compliance with the flow duration standard is designed.

Notes on SSD Table Characteristics

- The pump discharge rate would likely be initially set at just below ½ if the 2-year flow from the pre-developed condition. As runoff coming to the storage pond increases and the available storage volume gets used up, it would be necessary to increase the pump discharge rate above ½ of the 2-year. The increase(s) above ½ of the 2-year must be such that they provide some relief to the storage needs but at the same time they will not cause violations of the flow duration standard at the higher flows. The final design SSD table will identify the appropriate pumping rates and the corresponding stage and storages.
- When building such a flow control system, the design must ensure that any automatic adjustments to the pumping rates will be as a result of changes to the available storage in accordance with the final design SSD table.

b. The stormwater filtration system uses a storage pond/tank and the discharge from this pond/tank gravity flows to the filter. This is usually a slow sand filter system and it is possible to model it in WWHM as a Filter element or as a combination of Pond and Filter element placed in series. The stage/storage/discharge table(s) may then be generated within WWHM as follows:

   (i) While in the “Developed Mitigated” scenario, add a Filter element under the basin element containing the post-developed land use areas. The length and width of this filter element would have to be the same as the bottom length and width of the upstream storage pond/tank.

   (ii) In cases where the length and width of the filter is not the same as those for the bottom of the upstream storage tank/pond, the treatment system may be modeled as a Pond element followed by a Filter element. By having these two elements, WWHM would then generate a SSD table for the storage pond which then gravity flows to the Filter element. The Filter element downstream of the storage pond would have a storage component through the media, and an overflow component for when the filtration capacity is exceeded.

WWHM can route the runoff from the post-developed condition through the treatment systems in 4b and determine compliance with the flow duration standard. This would be an iterative design procedure where if the initial sizing estimates for the treatment system proved to be inadequate, the designer would have to modify the system and route the runoff through it again. The iteration would continue until compliance with the flow duration standard is achieved.

5. It should be noted that the above procedures would be used to meet the flow control requirements. The filtration system must be able to meet the runoff treatment requirements. It is likely that the discharge flow rate of ½ of the 2-year or more may exceed the treatment capacity of the system. If that is the case, the discharge rate(s) must be reduced to allow proper treatment. Any reduction in the flows would likely result in the need for a larger storage volume.

   If the system does not allow you to discharge at the slower rate as described above and if the site has a retention or detention pond that will serve the planned development, the discharge from the treatment system may be directed to the permanent retention/detention pond to comply with the flow control requirements. In this case, the untreated stormwater storage pond and treatment system will be sized according to the sizing criteria for flow-through treatment systems for flow control exempt waterbodies except all discharges (water passing through the treatment system and stormwater bypassing the treatment system) will be directed into the permanent retention/detention pond. If site constraints make locating the untreated stormwater storage pond difficult, the permanent retention/detention pond may be divided to serve as the untreated stormwater discharge pond and the post-treatment flow control pond. A berm or barrier must be used in this case so the untreated water does not mix with the treated water. Both untreated stormwater storage requirements, and adequate post-treatment flow control must be achieved. The post-treatment flow control pond's revised dimensions must be entered into the WWHM and the WWHM must be run to confirm compliance with the flow control requirements.

3.2.20.5 Maintenance Standards

Rapid sand filters typically have automatic backwash systems that are triggered by a pre-set pressure drop across the filter. If the backwash water volume is not large or substantially more turbid than the stormwater stored in the holding pond or tank, backwash return to the pond or tank may be appropriate. However, land application or another means of treatment and disposal may be necessary.

- Clean and/or replace screen, bag, and fiber filters when they become clogged.
- Remove sediment from the storage and/or treatment ponds as necessary. Typically, sediment removal is required once or twice during a wet season and at the decommissioning of the ponds.

3.2.21 BMP C252: High pH Neutralization using CO_2

3.2.21.1 Description

When pH levels in stormwater rise above 8.5 it is necessary to lower the pH levels to the acceptable range of 6.5 to 8.5, this process is called pH neutralization. pH neutralization involves the use of solid or compressed carbon dioxide gas in water requiring neutralization. Neutralized stormwater may be discharged to surface waters under the General Construction NPDES permit but neutralized process wastewater must be managed to prevent discharge to surface waters. Process wastewater includes wastewaters such as concrete truck wash-out, hydro-demolition, or saw-cutting slurry.

Reason for pH neutralization

A pH level range of 6.5 to 8.5 is typical for most natural watercourses, and this neutral pH is required for the survival of aquatic organisms. Should the pH rise or drop out of this range, fish and other aquatic organisms may become stressed and may die.

Calcium hardness can contribute to high pH values and cause toxicity that is associated with high pH conditions. A high level of calcium hardness in waters of the state is not allowed.

The water quality standard for pH in Washington State is in the range of 6.5 to 8.5.

Groundwater standard for calcium and other dissolved solids in Washington State is less than 500 mg/l.

Causes of high pH

High pH at construction sites is most commonly caused by the contact of stormwater with poured or recycled concrete, cement, mortars, and other Portland cement or lime-containing construction materials. (See BMP C151: Concrete Handling for more information on concrete handling procedures). The principal caustic agent in cement is calcium hydroxide (free lime).

Advantages of CO_2 Sparging

- Rapidly neutralizes high pH water.
- Cost effective and safer to handle than acid compounds.
- CO_2 is self-buffering. It is difficult to overdose and create harmfully low pH levels.
- Material is readily available.

The Chemical Process

When carbon dioxide (CO_2) is added to water (H_2O), carbonic acid (H_2CO_3) is formed which can further dissociate into a proton (H^+) and a bicarbonate anion (HCO_3^-) as shown below:

$$CO_2 + H_2O \leftrightarrow H_2CO_3 \leftrightarrow H^+ + HCO_3^-$$

The free proton is a weak acid that can lower the pH.

Water temperature has an effect on the reaction as well. The colder the water temperature is the slower the reaction occurs and the warmer the water temperature is the quicker the reaction occurs. Most construction applications in Washington State have water temperatures in the 50°F or higher range so the reaction is almost simultaneous.

3.2.21.2 Treatment Procedures

High pH water may be treated using continuous treatment, continuous discharge systems. These manufactured systems continuously monitor influent and effluent pH to ensure that pH values are within an acceptable range before being discharged. All systems must have fail safe automatic shut off switches in the event that pH is not within the acceptable discharge range. Only trained operators may operate manufactured systems. System manufacturers often provide trained operators or training on their devices.

The following procedure may be used when not using a continuous discharge system:

- Prior to treatment, the appropriate jurisdiction should be notified in accordance with the regulations set by the jurisdiction.
- Every effort should be made to isolate the potential high pH water in order to treat it separately from other stormwater on-site.
- Water should be stored in an acceptable storage facility, detention pond, or containment cell prior to treatment.
- Transfer water to be treated to the treatment structure. Ensure that treatment structure size is sufficient to hold the amount of water that is to be treated. Do not fill tank completely, allow at least 2 feet of freeboard.
- The operator samples the water for pH and notes the clarity of the water. As a rule of thumb, less CO_2 is necessary for clearer water. This information should be recorded.
- In the pH adjustment structure, add CO_2 until the pH falls in the range of 6.9-7.1. Remember that pH water quality standards apply so adjusting pH to within 0.2 pH units of receiving water (background pH) is recommended. It is unlikely that pH can be adjusted to within 0.2 pH units using dry ice. Compressed carbon dioxide gas should be introduced to the water using a carbon dioxide diffuser located near the bottom of the tank, this will allow carbon dioxide to bubble up through the water and diffuse more evenly.
- Slowly release the water to discharge making sure water does not get stirred up in the process. Release about 80% of the water from the structure leaving any sludge behind.
- Discharge treated water through a pond or drainage system.
- Excess sludge needs to be disposed of properly as concrete waste. If several batches of water are undergoing pH treatment, sludge can be left in treatment structure for the next batch treatment. Dispose of sludge when it fills 50% of tank volume.

Sites that must implement flow control for the developed site must also control stormwater release rates during construction. All treated stormwater must go through a flow control facility before being released to surface waters which require flow control.

3.2.21.3 Safety and Materials Handling

- All equipment should be handled in accordance with OSHA rules and regulations.
- Follow manufacturer guidelines for materials handling.

3.2.21.4 Operator Records

Each operator should provide:

- A diagram of the monitoring and treatment equipment
- A description of the pumping rates and capacity the treatment equipment is capable of treating.

Each operator should keep a written record of the following:

- Client name and phone number
- Date of treatment
- Weather conditions
- Project name and location
- Volume of water treated
- pH of untreated water
- Amount of CO_2 needed to adjust water to a pH range of 6.9-7.1
- pH of treated water
- Discharge point location and description

A copy of this record should be given to the client/contractor who should retain the record for three years.

3.2.22 BMP C253: pH Control for High pH Water

3.2.22.1 Description

When pH levels in stormwater rise above 8.5 it is necessary to lower the pH levels to the acceptable range of 6.5 to 8.5, this process is called pH neutralization. Stormwater with pH levels exceeding water quality standards may be treated by infiltration, dispersion in vegetation or compost, pumping to a sanitary sewer, disposal at a permitted concrete batch plant with pH neutralization capabilities, or carbon dioxide sparging. BMP C252 provides guidance for carbon dioxide sparging.

Reason for pH neutralization

A pH level between 6.5 and 8.5 is typical for most natural watercourses, and this pH range is required for the survival of aquatic organisms. Should the pH rise or drop out of this range, fish and other aquatic organisms may become stressed and may die.

Causes of high pH

High pH levels at construction sites are most commonly caused by the contact of stormwater with poured or recycled concrete, cement, mortars, and other Portland cement or lime-containing construction materials. (See BMP C151: Concrete Handling for more information on concrete handling procedures). The principal caustic agent in cement is calcium hydroxide (free lime).

3.2.22.2 Disposal Methods

Infiltration

- Infiltration is only allowed if soil type allows all water to infiltrate (no surface runoff) without causing or contributing to a violation of surface or groundwater quality standards.
- Infiltration techniques should be consistent with Volume V, Chapter 5.

Dispersion

- Use BMP L614 Full Dispersion

Sanitary Sewer Disposal

- Local sewer authority approval is required prior to disposal via the sanitary sewer.

Concrete Batch Plant Disposal

- Only permitted facilities may accept high pH water.
- Facility should be contacted before treatment to ensure they can accept the high pH water.

Stormwater Discharge

Any pH treatment options that generate treated water that must be discharged off site are subject to flow control requirements. Sites that must implement flow control for the developed site must also control stormwater release rates during construction. All treated stormwater must go through a flow control facility before being released to surface waters which require flow control.

Appendix A Standard Notes for Erosion Control Plans

Use the following standard notes on project Stormwater Pollution Prevention Plan (SWPPP) and associated drawings. Other mandatory notes for construction plans may be applicable. Plans shall identify the name and phone number of the person or firm responsible for the preparation and maintenance of the erosion control plan.

Standard Notes

Approval of this erosion/sedimentation control (ESC) plan does not constitute an approval of permanent road or drainage design (e.g. size and location of roads, pipes, restrictors, channels, retention facilities, utilities, etc.).

The implementation of these ESC plans and the construction, maintenance, replacement, and upgrading of these ESC facilities is the responsibility of the applicant/contractor until all construction is completed and approved and vegetation/landscaping is established.

The boundaries of the clearing limits shown on this plan shall be clearly flagged in the field prior to construction. During the construction period, no disturbance beyond the flagged clearing limits shall be permitted. The flagging shall be maintained by the applicant/contractor for the duration of construction.

The ESC facilities shown on this plan must be constructed in conjunction with all clearing and grading activities, and in such a manner as to ensure that sediment and sediment laden water do not enter the drainage system or roadways, or violate applicable water standards.

The ESC facilities shown on this plan are the minimum requirements for anticipated site conditions. During the construction period, these ESC facilities shall be upgraded as needed for unexpected storm events and to ensure that sediment and sediment-laden water do not leave the site.

The ESC facilities shall be inspected daily by the applicant/contractor and maintained as necessary to ensure their continued functioning.

The ESC facilities on inactive sites shall be inspected and maintained a minimum of once a month or within the 48 hours following a major storm event.

At no time shall more than one foot of sediment be allowed to accumulate within a catch basin sediment trap. All catch basins and conveyance lines shall be cleaned prior to paving. The cleaning operation shall not flush sediment-laden water into the downstream system.

Stabilized construction entrances shall be installed at the beginning of construction and maintained for the duration of the project. Additional measures may be required to ensure that all paved areas are kept clean for the duration of the project.

Appendix B Background Information on Chemical Treatment

Coagulation and flocculation have been used for over a century to treat water. It is used less frequently for the treatment of wastewater. The use of coagulation and flocculation for treating stormwater is a very recent application. Experience with the treatment of water and wastewater has resulted in a basic understanding of the process, in particular factors that affect performance. This experience can provide insights as to how to most effectively design and operate similar systems in the treatment of stormwater.

Fine particles suspended in water give it a milky appearance, measured as turbidity. Their small size, often much less than 1 µm in diameter, give them a very large surface area relative to their volume. These fine particles typically carry a negative surface charge. Largely because of these two factors, small size and negative charge, these particles tend to stay in suspension for extended periods of time. Thus, removal is not practical by gravity settling. These are called stable suspensions. Polymers, as well as inorganic chemicals such as alum, speed the process of clarification. The added chemical destabilizes the suspension and causes the smaller particles to agglomerate. The process consists of three steps: coagulation, flocculation, and settling or clarification. Each step is explained below, as well as the factors that affect the efficiency of the process.

Coagulation: Coagulation is the first step. It is the process by which negative charges on the fine particles that prevent their agglomeration are disrupted. Chemical addition is one method of destabilizing the suspension, and polymers are one class of chemicals that are generally effective. Chemicals that are used for this purpose are called coagulants. Coagulation is complete when the suspension is destabilized by the neutralization of the negative charges. Coagulants perform best when they are thoroughly and evenly dispersed under relatively intense mixing. This rapid mixing involves adding the coagulant in a manner that promotes rapid dispersion, followed by a short time period for destabilization of the particle suspension. The particles are still very small and are not readily separated by clarification until flocculation occurs.

Flocculation: Flocculation is the process by which fine particles that have been destabilized bind together to form larger particles that settle rapidly. Flocculation begins naturally following coagulation, but is enhanced by gentle mixing of the destabilized suspension. Gentle mixing helps to bring particles in contact with one another such that they bind and continually grow to form "flocs." As the size of the flocs increases, they become heavier and tend to settle more rapidly.

Clarification: The final step is the settling of the particles. Particle density, size, and shape are important during settling. Dense, compact flocs settle more readily than less dense, fluffy flocs. Because of this, flocculation to form dense, compact flocs is particularly important during water treatment. Water temperature is important during settling. Both the density and viscosity of water are affected by temperature; these in turn affect settling. Cold temperatures increase viscosity and density, thus slowing down the rate at which the particles settle.

The conditions under which clarification is achieved can affect performance. Currents can affect settling. Currents can be produced by wind, by differences between the temperature of the incoming water and the water in the clarifier, and by flow conditions near the inlets and outlets.

Quiescent water, such as that which occurs during batch clarification, provides a good environment for effective performance, as many of these factors become less important in comparison to typical sedimentation basins. One source of currents that is likely important in batch systems is movement of the water leaving the clarifier unit. Given that flocs are relatively small and light, the exit velocity of the water must be as low as possible. Sediment on the bottom of the basin can be resuspended and removed by fairly modest velocities.

Coagulants: Polymers are large organic molecules that are made up of subunits linked together in a chain-like structure. Attached to these chain-like structures are other groups that carry positive or negative charges, or have no charge. Polymers that carry groups with positive charges are called cationic, those with negative charges are called anionic, and those with no charge (neutral) are called nonionic.

Cationic polymers can be used as coagulants to destabilize negatively charged turbidity particles present in natural waters, wastewater, and stormwater. Aluminum sulfate (alum) can also be used as this chemical becomes positively charged when dispersed in water. In practice, the only way to determine whether a polymer is effective for a specific application is to perform preliminary or on-site testing.

Polymers are available as powders, concentrated liquids, and emulsions (which appear as milky liquids). The latter are petroleum based, which are not allowed for construction stormwater treatment. Polymer effectiveness can degrade with time and from other influences. Thus, manufacturers' recommendations for storage should be followed. Manufacturers' recommendations usually do not provide assurance of water quality protection or safety to aquatic organisms. Consideration of water quality protection is necessary in the selection and use of all polymers.

Application Considerations: Application of coagulants at the appropriate concentration or dosage rate for optimum turbidity removal is important for management of chemical cost, for effective performance, and to avoid aquatic toxicity. The optimum dose in a given application depends on several site-specific features. Turbidity of untreated water can be important with turbidities greater than 5,000 NTU. The surface charge of particles to be removed is also important. Environmental factors that can influence dosage rate are water temperature, pH, and the presence of constituents that consume or otherwise affect polymer effectiveness. Laboratory experiments indicate that mixing previously settled sediment (floc sludge) with untreated stormwater significantly improves clarification, therefore reducing the effective dosage rate. Preparation of working solutions and thorough dispersal of polymers in water to be treated is also important to establish the appropriate dosage rate.

For a given water sample, there is generally an optimum dosage rate that yields the lowest residual turbidity after settling. When dosage rates below this optimum value (underdosing) are applied, there is an insufficient quantity of coagulant to react with, and therefore destabilize, all of the turbidity present. The result is residual turbidity (after flocculation and settling) that is higher than with the optimum dose. Overdosing, application of dosage rates greater than the optimum value, can also negatively impact performance. Again, the result is higher residual turbidity than that with the optimum dose.

Mixing in Coagulation/Flocculation: The G-value, or just "G", is often used as a measure of the mixing intensity applied during coagulation and flocculation. The symbol G stands for “velocity gradient”, which is related in part to the degree of turbulence generated during mixing. High G-values mean high turbulence, and vice versa. High G-values provide the best conditions for coagulant addition. With high Gs, turbulence is high and coagulants are rapidly dispersed to their appropriate concentrations for effective destabilization of particle suspensions.

Low G-values provide the best conditions for flocculation. Here, the goal is to promote formation of dense, compact flocs that will settle readily. Low Gs provide low turbulence to promote particle collisions so that flocs can form. Low Gs generate sufficient turbulence such that collisions are effective in floc formation, but do not break up flocs that have already formed.

Design engineers wishing to review more detailed presentations on this subject are referred to the following textbooks:

- Fair, G., J. Geyer and D. Okun, Water and Wastewater Engineering, Wiley and Sons, NY, 1968.
- American Water Works Association, Water Quality and Treatment, McGraw-Hill, NY, 1990.
- Weber, W.J., Physiochemical Processes for Water Quality Control, Wiley and Sons, NY, 1972.

Adjustment of pH and Alkalinity: The pH must be in the proper range for the polymers to be effective, which is 6.5 to 8.5 for Calgon CatFloc 2953, the most commonly used polymer. As polymers tend to lower the pH, it is important that the stormwater have sufficient buffering capacity. Buffering capacity is a function of alkalinity. Without sufficient alkalinity, the application of the polymer may lower the pH to below 6.5. A pH below 6.5 not only reduces the effectiveness of the polymer, it may create a toxic condition for aquatic organisms. Stormwater may not be discharged without readjustment of the pH to above 6.5. The target pH should be within 0.2 standard units of the receiving water pH.

Experience gained at several projects in the City of Redmond has shown that the alkalinity needs to be at least 50 mg/L to prevent a drop in pH to below 6.5 when the polymer is added.

Appendix C Construction SWPPP Short Form

Projects falling within the thresholds listed below may use this short form instead of preparing a professionally-designed Construction Stormwater Pollution Prevention Plan (SWPPP). If your project meets the following thresholds and includes or may impact a critical area, please contact the City to determine if the SWPPP short form may be used.

The thresholds for using this form are projects that propose to:

- Add or replace between 2,000 and 5,000 square feet of impervious surface.

  OR

- Clear or disturb between 7,000 square feet and 1 acre of land.

  OR

- Grade/fill less than 500 cubic yards.

If project quantities exceed either of these thresholds, prepare a formal Construction SWPPP as described in Chapter 2 of this volume.

City of Auburn
Construction Stormwater Pollution Prevention Plan
Short Form

Project Name: _____
Address: _____
Contact/Owner: _____ Phone: _____
Erosion Control Supervisor: _____
Phone:_____ Cell: _____ Pager: _____
Emergency (After hour) contact: _____ Phone: _____
Permit No: _____
Parcel No.: _____

Required Submittals

1. Project Narrative

The Construction Stormwater Pollution Prevention Plan (SWPPP) Short-Form Narrative must be completed as part of this packet. Any information described, as part of the narrative, should be shown on the site plan.

NOTE: From October 1 thru April 30, clearing, grading, and other soil disturbing activities shall only be permitted by special authorization from the City of Auburn.

A. Project Description (Check all that apply)

☐ New Structure ☐ Building Addition ☐ Grading/Excavation ☐ Paving

☐ Utilities ☐ Other: _____

1. Total project area_____ (square feet)
2. Total proposed impervious area_____(square feet)
3. Total existing impervious area _____(square feet)
4. Total proposed area to be disturbed _____(square feet)
5. Total volumes of proposed cuts/fill_____(cubic yards)

Additional Project Information: _____
_____
_____
_____
_____
_____

B. Existing Site Conditions (Check all that apply)

- Describe the existing vegetation on the site. (Check all that apply)

  ☐ Forest ☐ Pasture/prairie grass ☐ Pavement ☐ Landscaping ☐ Brush

  ☐ Trees ☐ Other_____

- Describe how surface water (stormwater) drainage flows across/from the site. (Check all that apply)

  ☐ Sheet Flow ☐ Gutter ☐ Catch Basin ☐ Ditch/Swale ☐ Storm sewer

  ☐ Stream ☐ Other _____

- Describe any unusual site condition(s) or other features of note.

  ☐ Steep Grades ☐ Large depression ☐ Underground tanks ☐ Springs

  ☐ Easements ☐ Existing Structures ☐ Existing Utilities

  ☐ Other_____

C. Adjacent Areas (Check all that apply)

1. Check any adjacent areas that may be affected by site disturbance and describe in fully describe in item 2 below:

   ☐ Streams* ☐ Lakes* ☐ Wetlands* ☐ Steep Slopes*

   ☐ Residential Areas ☐ Roads ☐ Ditches, pipes, culverts

   ☐ Other _____

   ** If site is on or adjacent to a critical area, the City of Auburn may require additional information, engineering, and other permits to be submitted with this short-form.*

2. Describe how and where surface water enters the site from upstream properties: ___

   _____

   _____

   _____

   _____

   _____

   _____

3. Describe the downstream drainage path leading from the site to the receiving body of water. (Minimum distance of ¼-mile (1320 feet)) {E.g. water flows from site, into curb-line to catch basin at intersection of X and Y streets. A 10-inch pipe system conveys water another 1000 feet to a ravine/wetland.}

_____

_____

_____

_____

_____

D. Soils (Check all that apply)

The intent of this section is to identify when additional soils information may be required for applicants using this short form. There are other site-specific issues that may necessitate a soils investigation or more extensive erosion control practices. The City will determine these situations on a case-by-case basis as part of their review.

1. Does the project propose infiltration? Infiltration systems require prior City approval.

   ☐ Yes ☐ No ☐ Groundwater Protection Zone 2

2. Does the project propose construction near or on steep slopes?

   ☐ Yes ☐ No

   If infiltration is proposed for the site or steep slopes have been identified, the City will require soils information as part of the project design. The applicant must contact a soil professional or civil engineer specializing in soil analysis to perform an in-depth soils investigation. If yes is checked for either question, the City may not permit the use of this short-form.

E. Construction Sequencing/Phasing

1. Construction sequence: The standard construction sequence is as follows:

   - Mark clearing/grading limits.
   - Call Building Inspector to inspect clearing/grading limits.
   - Install initial erosion control practices (construction entrance, silt fence, catch basin inserts).
   - Contact Building Inspector to inspect initial erosion control practices.
   - Clear, grade, and fill site as outlined in the site plan while implementing and maintaining temporary erosion and sediment control practices at the same time.
   - Install permanent erosion protection (impervious surface, landscaping, etc.).
   - Contact Building Inspector for approval of permanent erosion protection and site grades.
   - Remove erosion control methods as permitted by the Building Inspector and repair permanent erosion protection as necessary.

- Monitor and maintain permanent erosion protection until fully established.

List any changes from the standard construction sequence outlined above.

_____

_____

_____

_____

_____

2. Construction phasing: If construction is going to occur in separate phases, describe:

_____

_____

_____

_____

F. Construction Schedule

1. Provide a proposed construction schedule (dates construction starts and ends, and dates for any construction phasing).

   Start Date: _____ End Date: _____

   Interim Phasing Dates: _____

   Wet Season Construction Activities: Wet season occurs from October 1 to April 30. Describe construction activities that will occur during this time period.

   _____

   _____

   _____

   _____

NOTE: Additional erosion control methods may be required during periods of increased surface water runoff.

2. Site Plan (See attached example)

A site plan, to scale, shall be included with this checklist that shows the following items:

___ a. Address, Parcel Number, Permit Number and Street names

___ b. North Arrow

___ c. Indicate boundaries of existing vegetation (e.g. tree lines, grassy areas, pasture areas, fields, etc.)

___ d. Identify any on-site or adjacent critical areas and associated buffers (e.g. wetlands, steep slopes, streams, etc.).

___ e. Identify any FEMA base flood boundaries and Shoreline Management boundaries.

___ f. Show existing and proposed contours.

___ g. Delineate areas that are to be cleared and graded.

___ h. Show all cut and fill slopes, indicating top and bottom of slope catch lines

___ i. Show locations where upstream runon enters the site and locations where runoff leaves the site.

___ j. Indicate existing surface water flow direction(s).

___ k. Label final grade contours and indicate proposed surface water flow direction and surface water conveyance systems (e.g. pipes, catch basins, ditches, etc.).

___ l. Show grades, dimensions, and direction of flow in all (existing and proposed) ditches, swales, culverts, and pipes.

__ m. Indicate locations and outlets of any dewatering systems (usually to sediment trap).

___ n. Identify and locate all erosion control techniques to be used during and after construction.

See attached: **Guidelines for Erosion Control Practices and sample Site Plan.**

Onsite field verification of actual conditions is required.

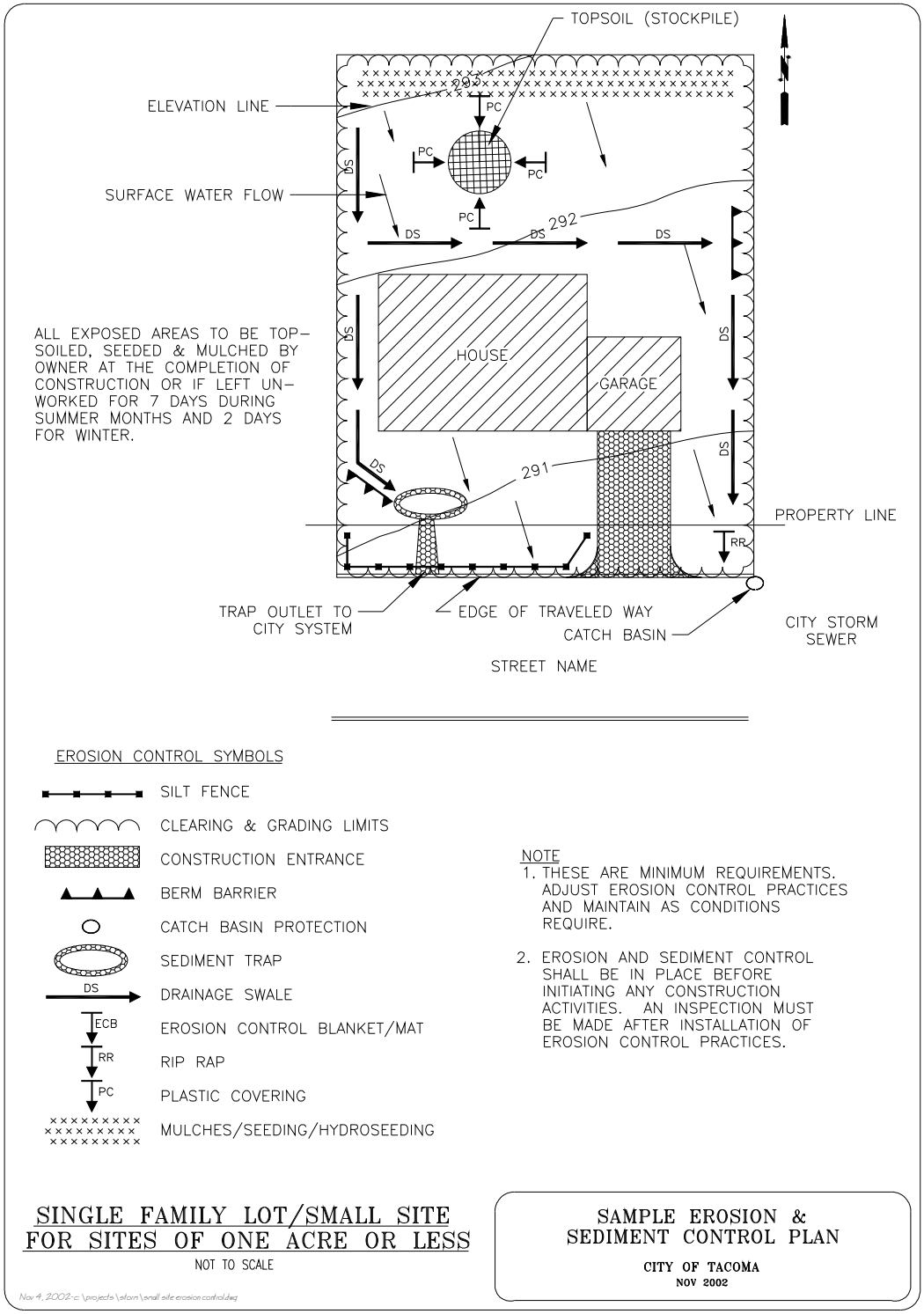

Figure II-C-38. Sample Erosion and Sediment Control Plan

Guidelines for Erosion Control Practices

As required by Ecology, this SWPPP must contain the 12 required elements. Check off each element as it is addressed in the SWPPP Short Form and/or on your site plan.

___ 1. Mark Clearing Limits (orange construction fence, staking with ribbon).
___ 2. Establish Construction Access (gravel entrance, tire wash area).
___ 3. Control Flow Rates (using pipe, drainage swales, berms).
___ 4. Install Sediment Controls (silt fence, sediment traps).
___ 5. Stabilize Soils (mulch, hydroseed, straw).
___ 6. Protect Slopes (divert water from top of slope, cover with plastic or erosion control blanket).
___ 7. Protect Drain Inlets (catch basin inserts).
___ 8. Stabilize Channels and Outlets (cover with grass, riprap).
___ 9. Control Pollutants (maintain equipment to prevent leaks).
___ 10. Control Dewatering (pump to sediment trap).
___ 11. Maintain BMPs (weekly maintenance/replacement, preparation for storm events).
___ 12. Manage the Project (establish construction schedule, phasing, contact numbers).

Several common erosion control techniques are explained and described in this section. Standard details for installation of these methods are included in this document. The applicant does not need to reproduce these drawings, but must indicate where each BMP will be used on a site plan and indicate which detail will be used. An example site plan and symbols list is provided to assist the applicant in preparation of their own site plan.

Only those erosion and sediment control techniques most pertinent to small construction sites are included here. More detailed information on construction BMPs can be found in Volume II of the City of Auburn Surface Water Management Manual. The BMP numbers referenced are BMPs located in the City of Auburn SWMM.

For phased construction plans, clearly indicate erosion control methods to be used for each phase of construction.

Mark Clearing Limits

All construction projects must clearly mark any clearing limits, sensitive areas and their buffers, and any trees that will be preserved prior to beginning any land disturbing activities, including clearing and grading. Clearly mark limits both in the field and on the plans. Plastic, metals, or stake wires may be used to mark the clearing limits. Do not staple or wire fences to trees. See Figure II-3-1 for Stake and Wire fencing

Applicable BMPs include:

- BMP C101: Preserving Natural Vegetation
- BMP C102: Buffer Zones
- BMP C103: High Visibility Plastic and Wire Fence
- BMP C104: Stake and Wire Fence

Construction Entrance

All construction projects subject to vehicular traffic shall provide a means of preventing vehicle "tracking" of soil from the site onto City streets. At a minimum, there shall be a rock pad construction entrance at every construction access point. *Note: The applicant should consider placing the entrance in the area for future driveway(s), as the rock can be used for driveway base material*. The entrance(s) shall be inspected weekly and if excessive sediment is found, more rock shall be added to ensure proper functioning.

If sediment is tracked off site, it shall be swept or shoveled from the paved surface on a daily basis. Washing of the streets to remove the sediment is not permitted because wash water can transport sediments to streams and other water courses via the City storm drainage system.

The entrance must be identified on the site plan and must conform to Figure II-C-39.

Applicable BMPs include:

- BMP C105: Stabilized Construction Entrance
- BMP C106: Wheel Wash
- BMP C107: Construction Road/Parking Area Stabilization

Sediment Barriers (Figure II-C-41 through Figure II-C-45)

Sediment barriers should be used downslope of disturbed areas. Sediment barriers are intended to create a barrier to slow the "sheet" flow of stormwater and allow the sediment to settle out behind the barrier. Do not use sediment barriers in streams, channels, ditches or around inlets/outlets of culverts. Sediment barriers selected shall be identified on the site plan and must conform to those shown in Figure II-C-41 through Figure II-C-45.

1. Silt fence

A silt fence is a temporary sediment barrier consisting of filter fabric, attached to supporting posts and entrenched into the soil. See Figure II-C-41.

2. Berm Barriers

A continuous berm is a temporary diversion dike or sediment barrier. It may be constructed with:

- Soil, sand, or aggregate encased within a geosynthetic fabric (see Figure II-C-42 and Figure II-C-43).
- Straw wattles (see Figure II-C-44).
- Sand bags (see Figure II-C-45).

Applicable BMPs include:

- BMP C231: Brush Barrier
- BMP C232: Gravel Filter Berm
- BMP C233: Silt Fence
- BMP C234: Vegetated Strip

- BMP C235: Straw Wattles

Catch Basin Protection (Figure II-C-46 and Figure II-C-47)

To prevent sediment from entering drainage systems prior to site stabilization, install catch basin protection within onsite and nearby downstream catch basins. Figure II-C-46 and Figure II-C-47 are acceptable methods of catch basin protection.

NOTE: Only Figure II-C-46 is approved for use in City of Auburn right of way.

Applicable BMPs include:

- BMP C220: Storm Drain Inlet Protection

Water Runoff Containment/Control

As an alternative to or in conjunction with sediment barriers, a combination of drainage swales and possibly a sediment trap may be used to control runoff and trap sediment before it leaves the construction site.

1. Sediment traps (Figure II-C-48 and Figure II-C-49)

Sediment traps are small temporary ponds (typically less than 3 feet deep) used to trap sediment suspended in site runoff before it leaves a construction site. As concentrated surface water pools within the pond, sediment is allowed to settle out of the water. Typically, a sediment trap will not be required for small sites as long as concentrated stormwater runoff (swales or ditches) does not occur.

Use Table II-C-13 for sizing your sediment trap.

Table II-C-13. Sediment Trap Sizing

Contributing Area (Acres)	Required Surface Area of Pond (sq. ft.)
1/8 acre or less	130
¼ acre or less	260
½ acre or less	520
¾ acre or less	780
1 acre or less	1040

If expected time of construction or downstream conditions warrant more protection, see BMP C240 for sizing information.

NOTE: If dewatering or significant stormwater runoff is expected, a sediment trap should be used to settle out solids before discharging to the City system.

2. Drainage Swales (Figure II-C-50)

Drainage swales are temporary ditches (minimum slope of 0.5% and a maximum of 10%) used to convey concentrated stormwater flows away from construction activities into a temporary sediment trap. Drainage swales carrying concentrated flows must discharge into a sediment trap or pond. Swales should be stabilized with erosion protection (see below). *Note: Swales should be completely stabilized before directing concentrated flows or they themselves will erode.*

Applicable BMPs include:

- BMP C240: Sediment Trap
- BMP C201: Grass-Lined Channels
- BMP C202: Channel Lining
- BMP C207: Check Dams

Soil Erosion Protection

Soil erosion protection is applied over the soil surface to reduce erosion from rainfall and wind. It can also be used to aid the establishment of vegetation. Between October 1st and April 30th, no soils shall remain exposed for more than 2 days unless they are being actively worked. From April 1st to September 30th, no soils shall remains exposed for more than 7 days unless they are being actively worked. See Table II-C-14, Table II-C-15 and Figure II-C-51 through Figure II-C-54.

1. Mulches/Seeding/Hydroseeding (Table II-C-14 and Table II-C-15)

Mulching is the application of a protective layer of straw or other suitable material to the soil surface. Mulch can be applied to any site where soil has been disturbed and the protective vegetation has been removed. Materials that may be used for mulching include:

- Straw or hay
- Compost material
- Wood or bark chips
- Hydraulically applied grass seed (Hydroseed)
- Bonded Fiber Matrix

Applicable BMPs include:

- BMP C121: Mulching
- BMP C120: Temporary and Permanent Seeding
- BMP C124: Sodding
- BMP C125: Compost
- BMP C126: Topsoiling
- BMP C130: Surface Roughening
- BMP C140: Dust Control

NOTE: The applicant may wish to mix in grass seed with the above practices to further aid in soil stabilization. Please refer to Table II-C-14 and Table II-C-15**.**

2. Erosion Control Blankets/ Mats (Figure II-C-51)

Erosion control blankets are suited for post-construction site stabilization, but may be used for temporary stabilization of highly erosive soils. Erosion control blankets are suitable for steep slopes, stream banks, and areas where vegetation will be slow to establish. These blankets are typically made from straw, coconut fiber, excelsior, or synthetic material that is enveloped in plastic, biodegradable netting, jute, polypropylene, or nylon.

Applicable BMPs include:

- BMP C122: Nets and Blankets

3. Gravel/Riprap (Figure II-C-52 and Figure II-C-53)

Gravel and Riprap are used to protect hillsides, drainage channels, stream banks, and pipe outlets from erosion due to surface water flow.

4. Plastic Sheeting (Figure II-C-54)

Plastic sheeting is a temporary method of erosion control. Plastic covering provides immediate, short-term erosion protection to slopes, soil stockpiles, and other disturbed areas. Unlike the other erosion protection techniques mentioned above, plastic sheeting shall be removed prior to applying permanent erosion protection.

Applicable BMPs include:

- BMP C123: Plastic Covering

Protect Slopes

Design, construct and phase projects in a manner that will minimize erosion. Protect slopes by diverting water at the top of the slope. Reduce slope velocities by minimizing the continuous length of slope. This can be accomplished by terracing and roughening slope sides. Seeding and establishing vegetation on slopes will help protect slopes as well.

Applicable BMPs include:

- BMP C120: Temporary and Permanent Seeding
- BMP C130: Surface Roughening
- BMP C131: Gradient Terraces
- BMP C200: Interceptor Dike and Swale
- BMP C204: Pipe Slope Drains

Control Pollutants Other Than Sediment

All pollutants must be disposed of in a manner that does not cause contamination of surface waters. Do not maintain or repair any heavy equipment or vehicles onsite. Clean any spills immediately. Handle concrete and concrete waste appropriately.

Applicable BMPs include:

- BMP C150: Materials on Hand
- BMP C151: Concrete Handling
- BMP C152: Sawcutting and Surfacing Pollution Prevention
- BMP C153: Materials Delivery, Storage and Containment
- BMP C154: Concrete Washout Area

Control Dewatering

All discharges to the City sewer system require City and King County approval. This approval process may be initiated by contacting the City. The City will coordinate the request for a letter of authorization from the King County Wastewater Treatment Division.

Any dewatering water must be discharged through a stabilized channel to a sediment pond.

Maintain BMPs

Maintain and repair temporary erosion and sediment control BMPs as needed. Inspect all BMPs at least weekly and after every storm event. Remove all temporary erosion and sediment control BMPs within 30 days after final site stabilization.

Table II-C-14. Temporary Erosion Control Seed Mix

	% Weight	% Purity	% Germination
Chewings or annual bluegrass *Festuca rubra var. commutate or Poa anna*	40	98	90
Perennial rye *Lolium perenne*	50	98	90
Redtop or colonial bentgrass *Agrostis alba or Agrostis tenuis*	5	92	85
White Dutch clover *Trifolium repens*	5	98	90

Table II-C-15. Mulch Standards and Guidelines

Mulch Material	Quality Standards	Application Rates	Remarks
Straw	Air-dried; free from undesirable seed and coarse material.	3" thick; 5 bales per 1000 sf or 2 to 3 tons per acre.	Cost-effective protection when applied with adequate thickness. Hand-application generally requires greater thickness than blown straw. The thickness of straw may be reduced by half when used in conjunction with seeding. In windy areas, straw must be held in place by crimping, using a tackifier, or covering with netting. Blown straw always has to be held in place with a tackifier as even light winds will blow it away. Straw, however, has several deficiencies that should be considered when selecting mulch materials. If often introduces and/or encourages the propagation of weed species and it has no significant long-term benefits. Straw should be used only if mulches with long-term benefits are unavailable locally. It should also not be used within the ordinary high-water elevation of surface waters (due to flotation).
Hydro-mulch	No growth inhibiting factors.	Approx. 25-30 lbs per 1000 sf or 1500-2000 lbs per acre.	Shall be applied with hydromulcher. Shall not be used without seed and tackifier unless the application rate is at least doubled. Fivers longer than about ¾ - 1 inch clog hydromulch equipment. Fibers should be kept to less than ¾ inch.
Composted Mulch and Compost	No visible water or dust during handling. Must be purchased from supplier with a Solid Waste Handling permit (unless exempt)	3" thick, min.; approx. 100 tons per acre (approx. 800 lbs. per yard).	More effective control can be obtained by increasing thickness to 3". Excellent mulch for protecting final grades until landscaping because it can be directly seeded or tilled into soil as an amendment. Composted mulch has a coarser size gradation than compost. It is more stable and practical to use in wet areas and during rainy weather conditions.
Chipped Site Vegetation	Average size shall be several inches. Gradations from fine to 6-inches in length for texture, variation, and interlocking properties.	3" minimum thickness	This is a cost-effective way to dispose of debris from clearing and grubbing, and it eliminates the problems associated with burning. Generally, it should not be used on slopes above approx. 10% because of its tendency to be transported by runoff. It is not recommended within 200 feet of surface waters. If seeding is expected shortly after mulch, the decomposition of the chipped vegetation may tie up nutrients important to grass establishment.

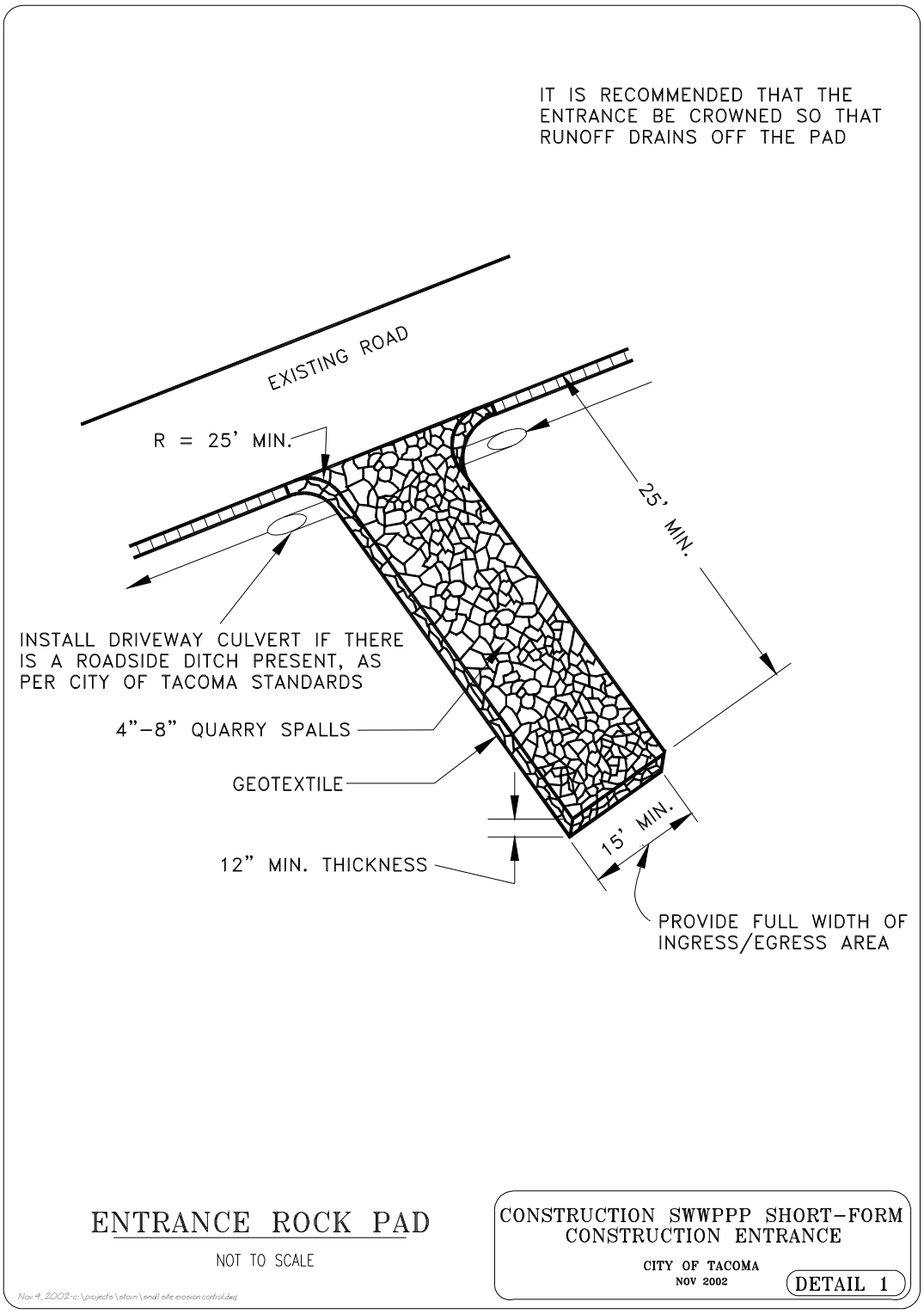

Figure II-C-39. Construction Entrance

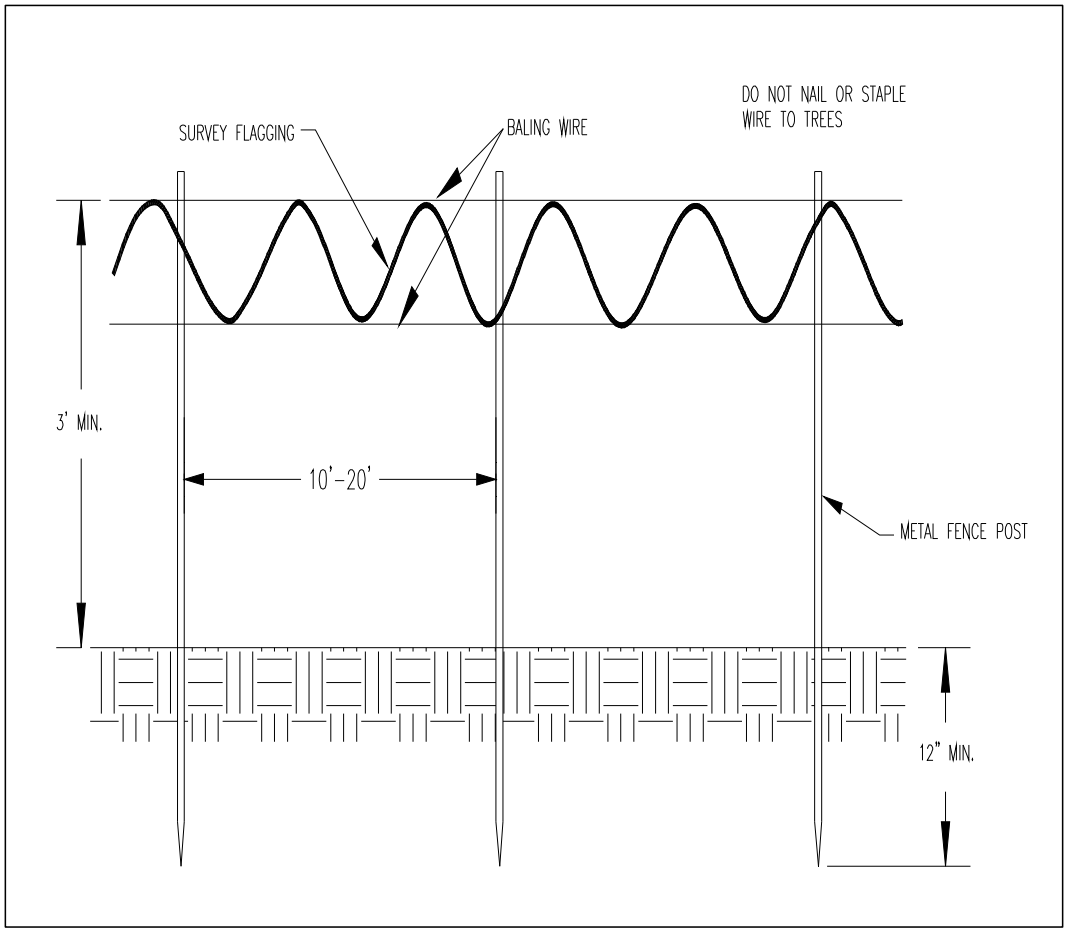

Figure II-C-40. Stake and Wire Fence

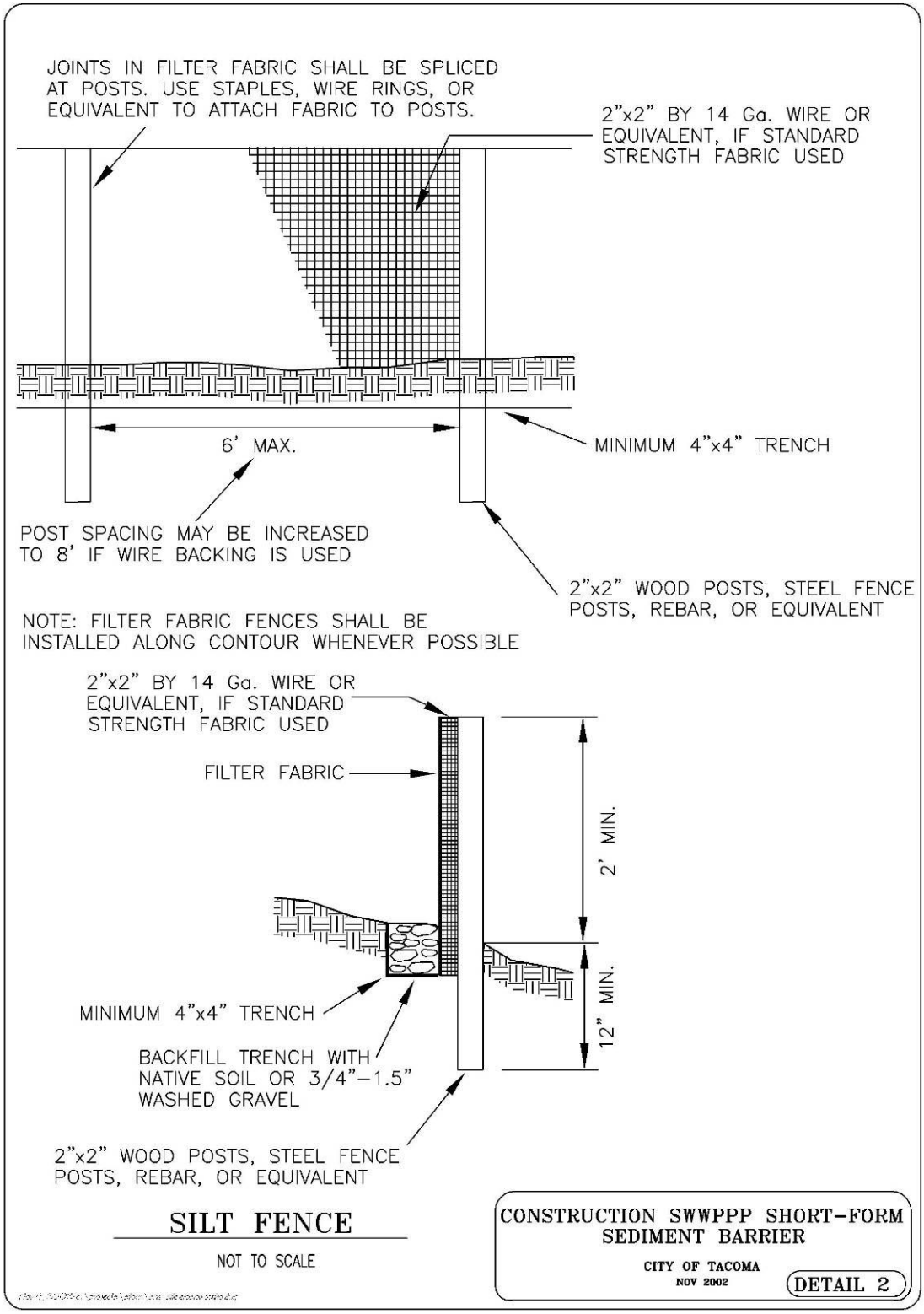

Figure II-C-41. Sediment Barrier – Silt Fence

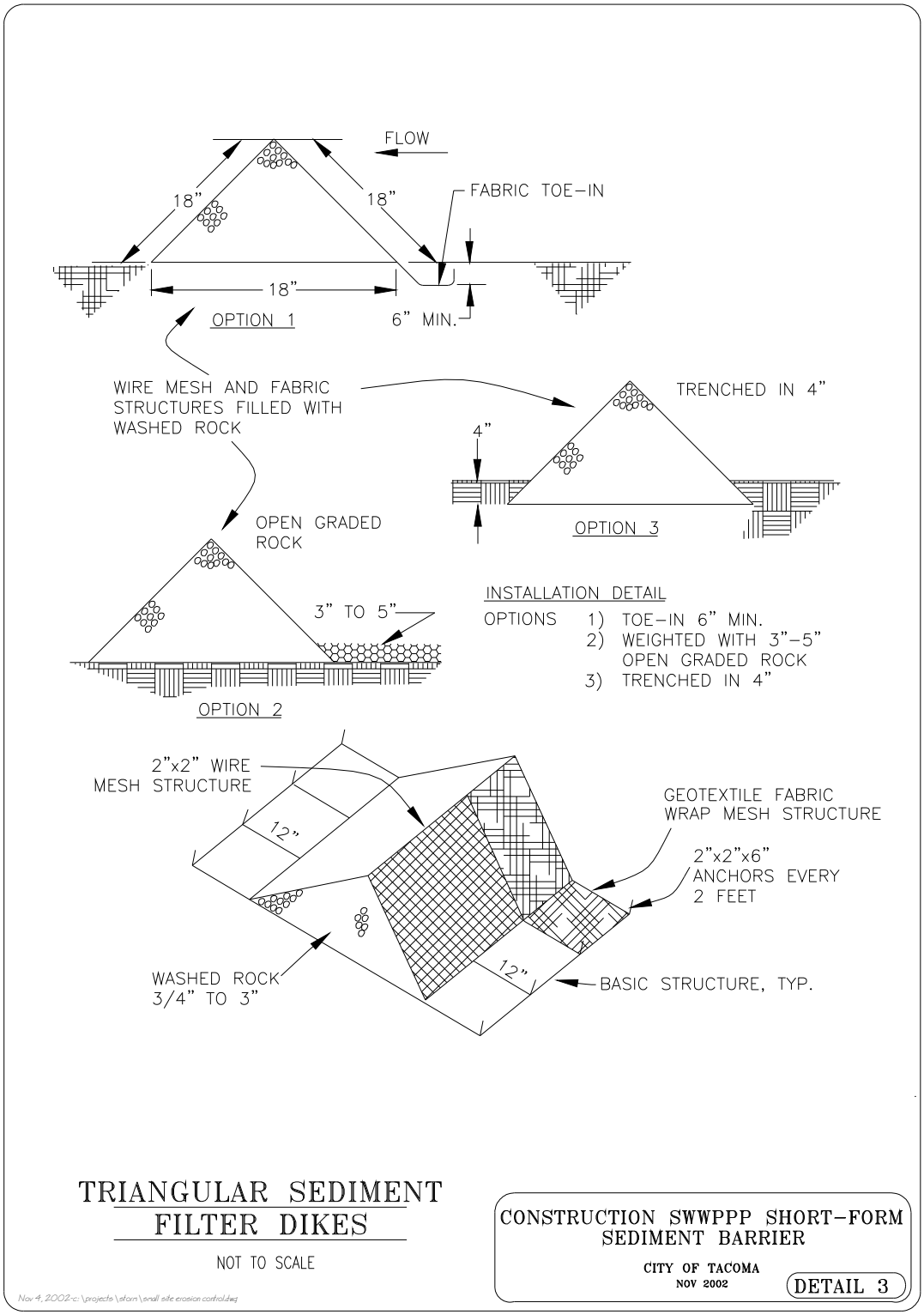

Figure II-C-42. Sediment Barrier – Triangular Sediment Filter Dikes

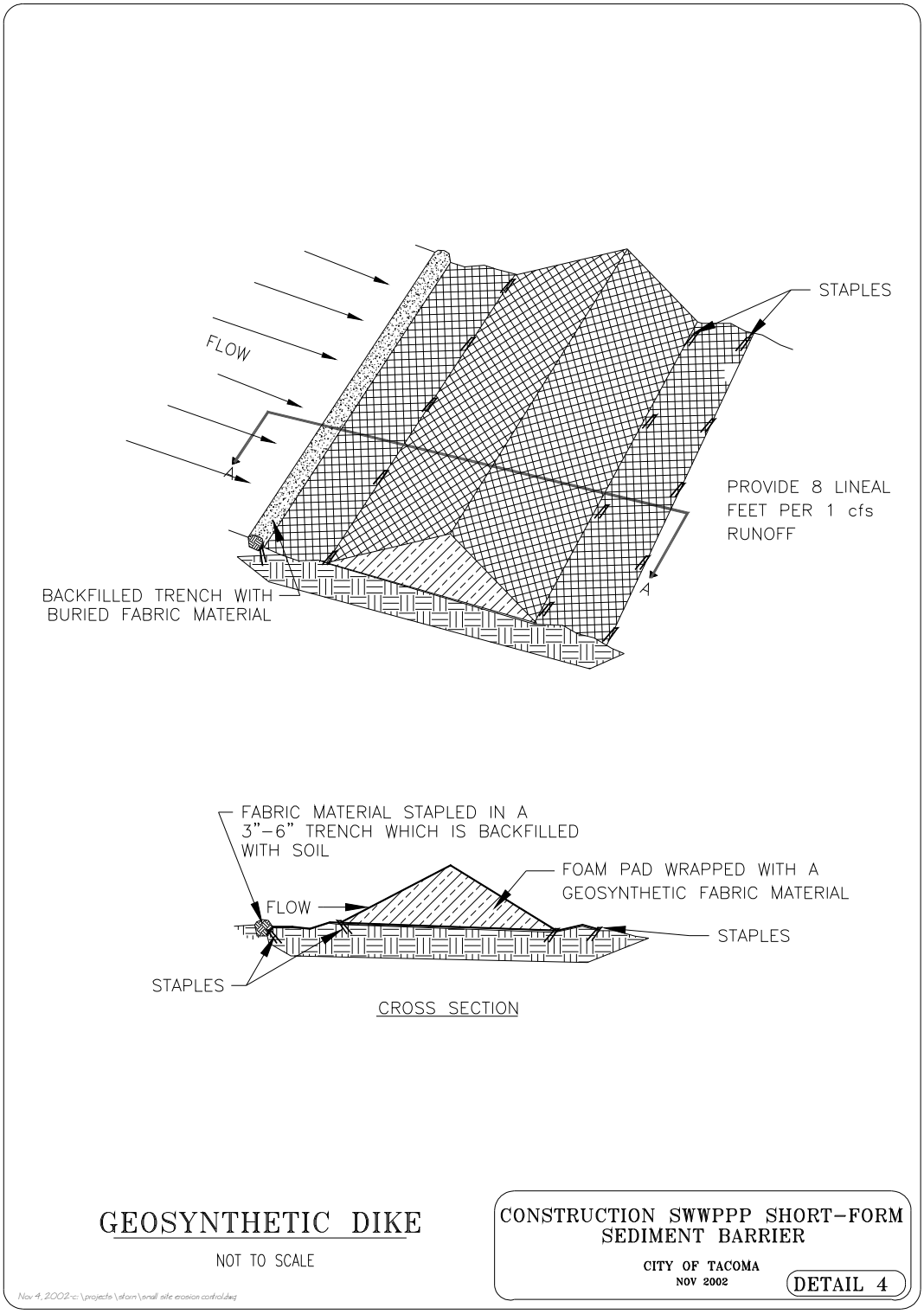

Figure II-C-43. Sediment Barrier – Geosynthetic Dike

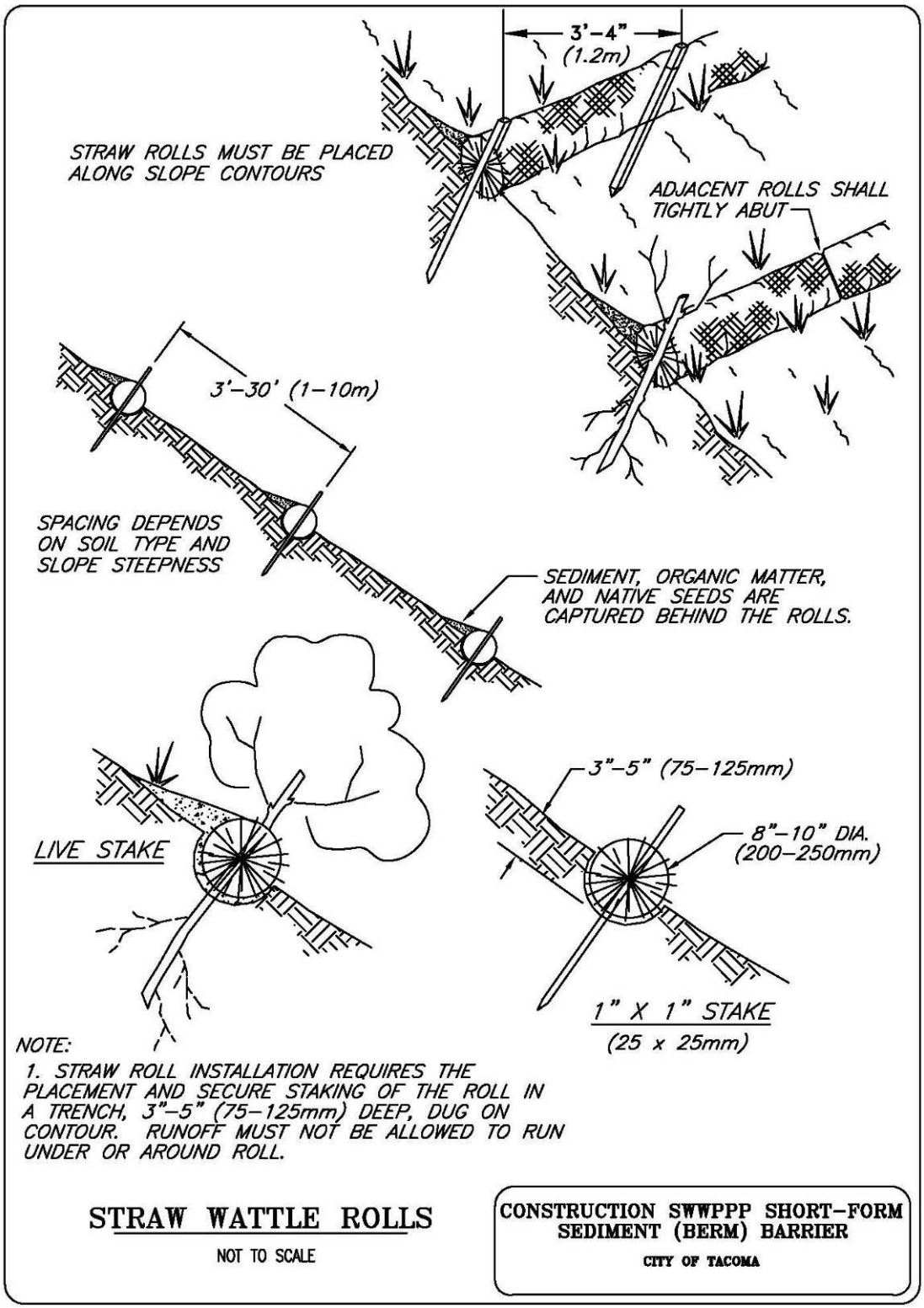

Figure II-C-44. Sediment (Berm) Barrier – Straw Wattle Rolls

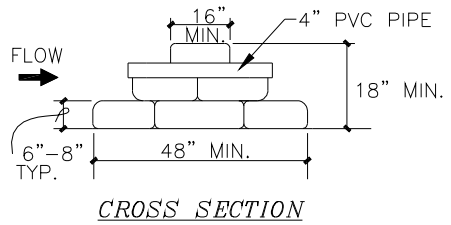

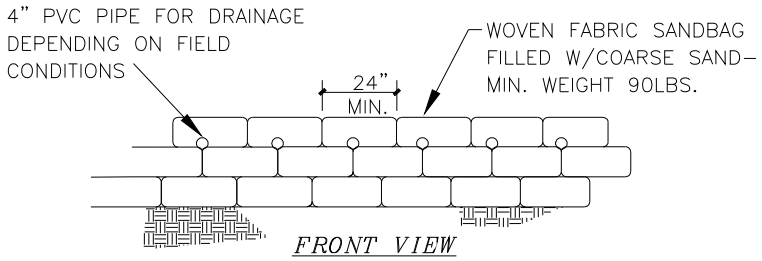

1) WHEN SANDBAG IS FILLED WITH COARSE GRADE SAND MATERIAL, THE OPEN END SHOULD BE STAPLED OR TIED WITH NYLON OR POLY CORD. THE WEIGHT SHALL BE 90 – 125 LBS.

2) SANDBAGS SHOULD BE STACKED IN AT LEAST THREE VERTICAL ROWS ABUTTING EACH OTHER, AND IN STAGGERED ARRANGEMENT. (REFER TO FRONT VIEW).

3) THE BASE OF THE BERM SHOULD BE AT LEAST 3 SANDBAGS DEEP AND CAN BE REDUCED TO 2 AND 1 BAG IN THE SECOND AND THIRD ROWS RESPECTIVELY. (REFER TO CROSS SECTION).

SANDBAG BERM

NOT TO SCALE

CONSTRUCTION SWWPPP SHORT–FORM
SEDIMENT (BERM) BARRIER

CITY OF TACOMA
NOV 2002

DETAIL 6

Nov 4, 2002-c:\projects\storm\small site erosion control.dwg

Figure II-C-45. Sediment (Berm) Barrier – Sandbag Berm

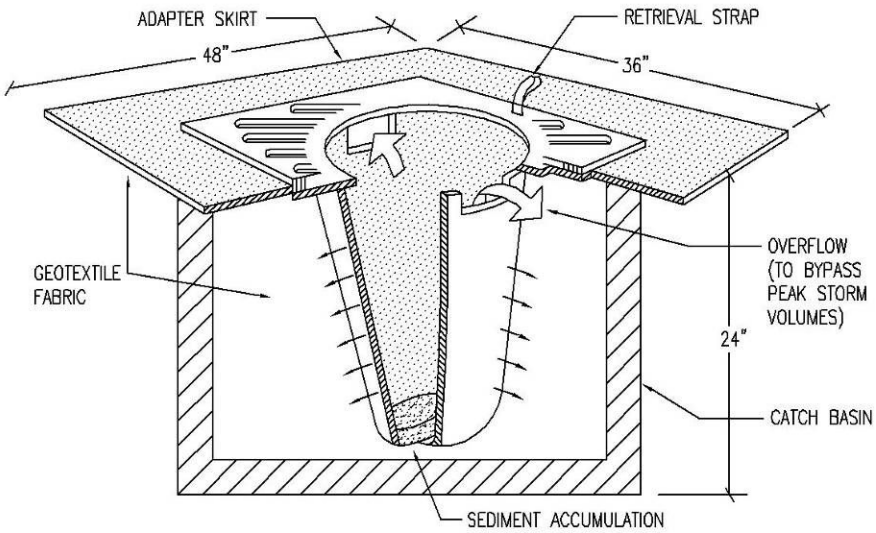

INLET PROTECTION NOTES:

1. FILTERS SHALL BE INSPECTED AFTER EACH STORM EVENT AND CLEANED OR REPLACED WHEN 1/3 FULL.

BAG FILTER

NOT TO SCALE

CONSTRUCTION SWWPPP SHORT-FORM
CATCH BASIN PROTECTION

CITY OF TACOMA

Figure II-C-46. Catch Basin Protection – Bag Filter

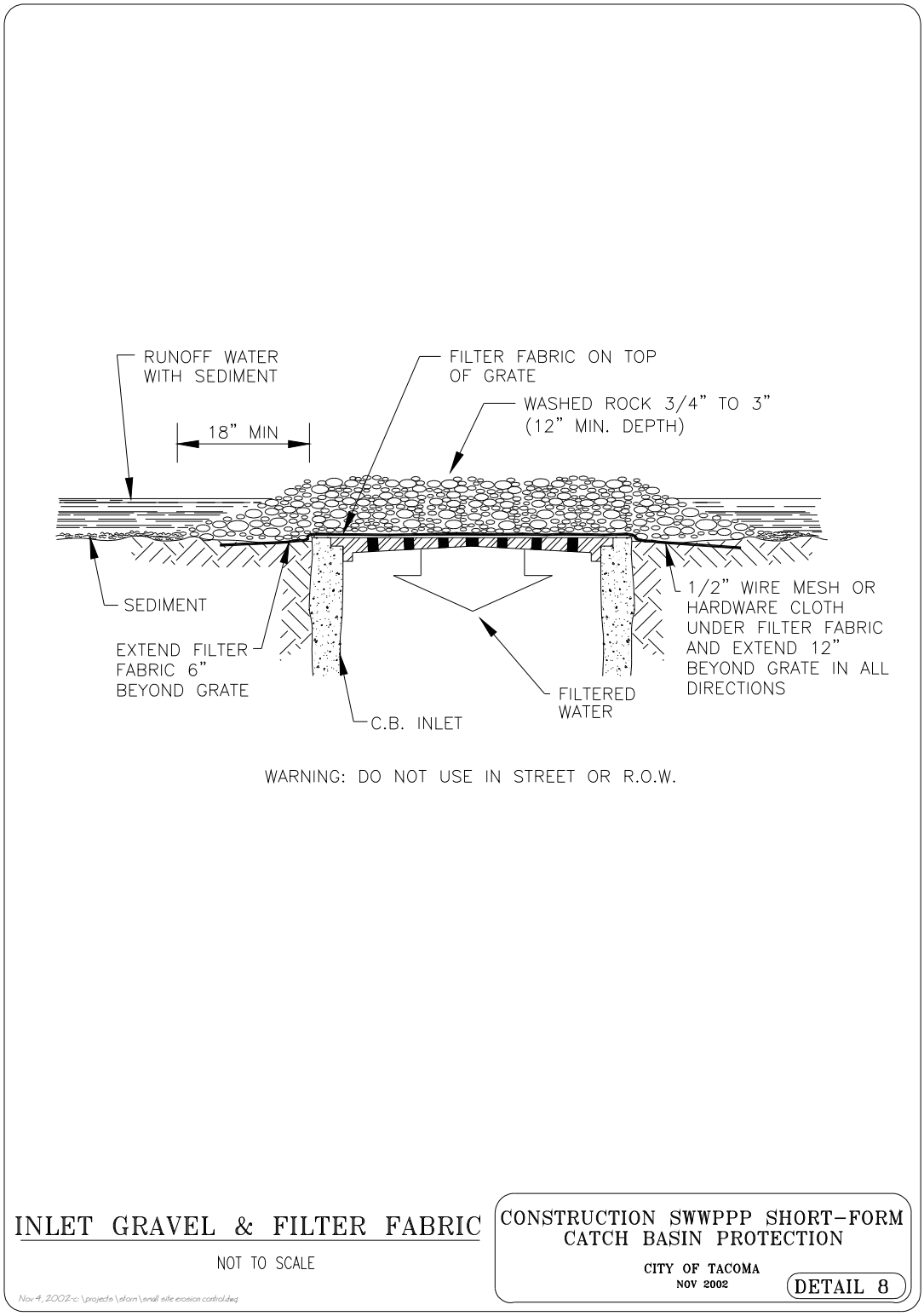

Figure II-C-47. Catch Basin Protection – Inlet Gravel and Filter Fabric

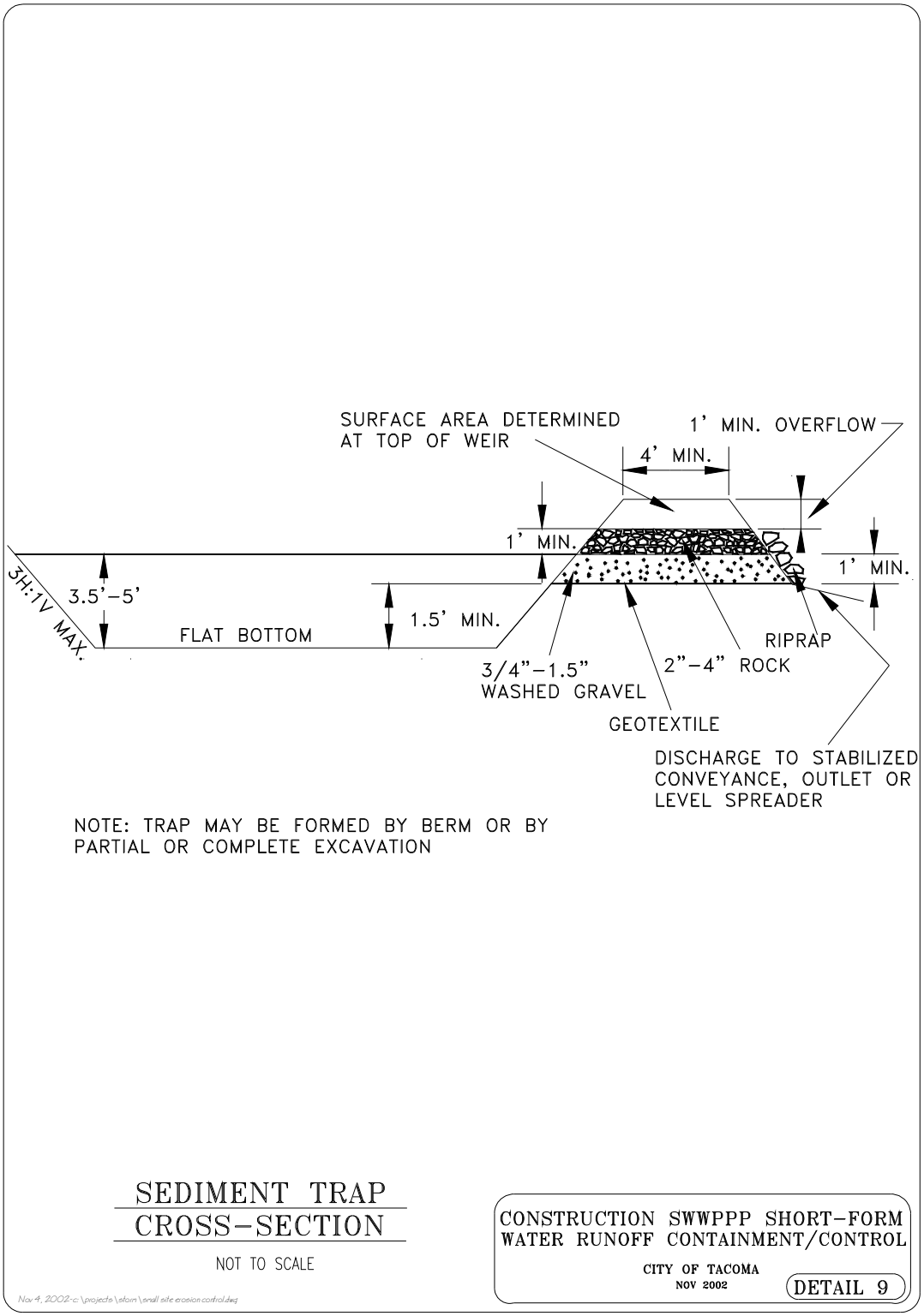

Figure II-C-48. Water Runoff Containment/Control – Sediment Trap Cross-Section

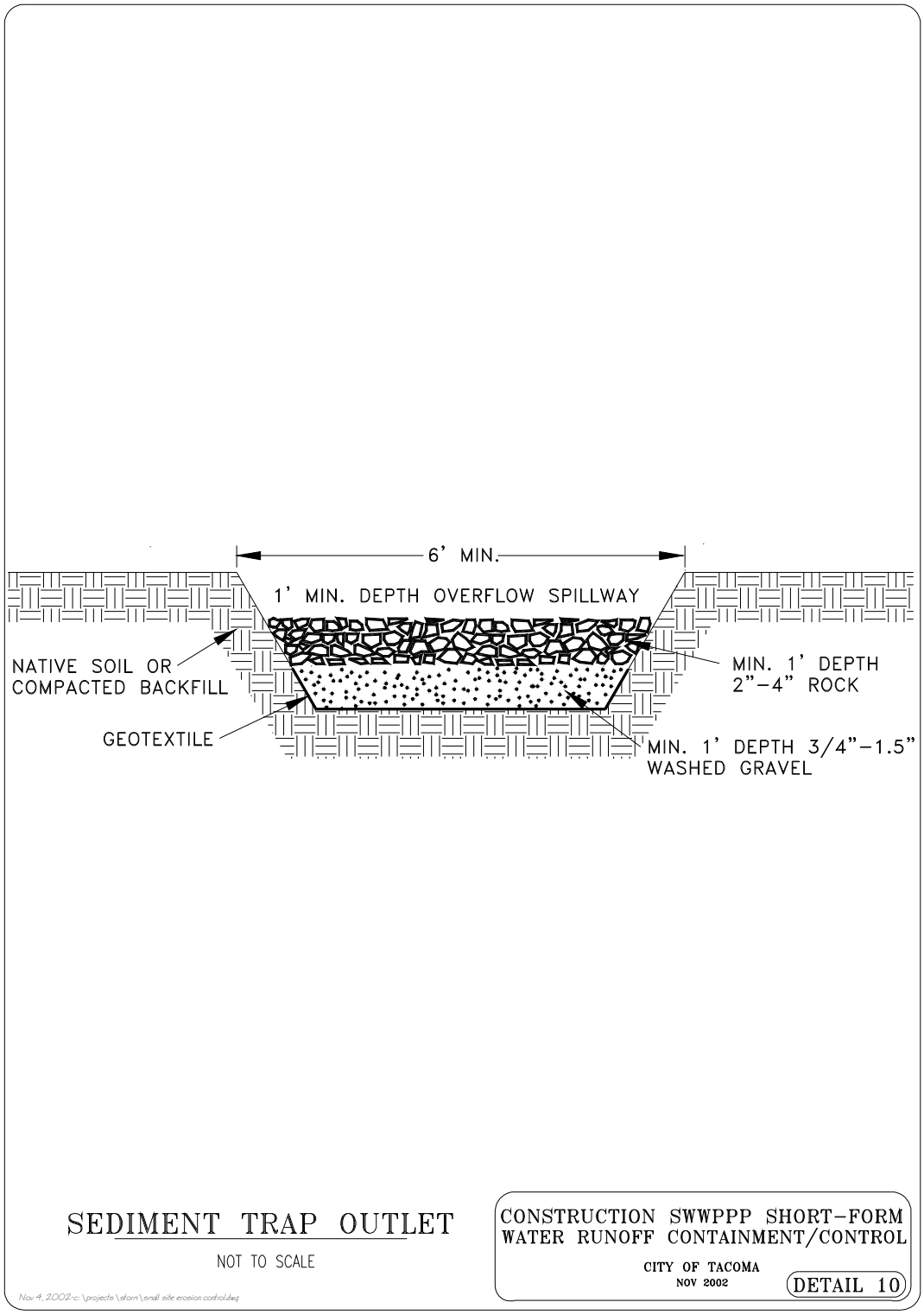

Figure II-C-49. Water Runoff Containment/Control – Sediment Trap Outlet

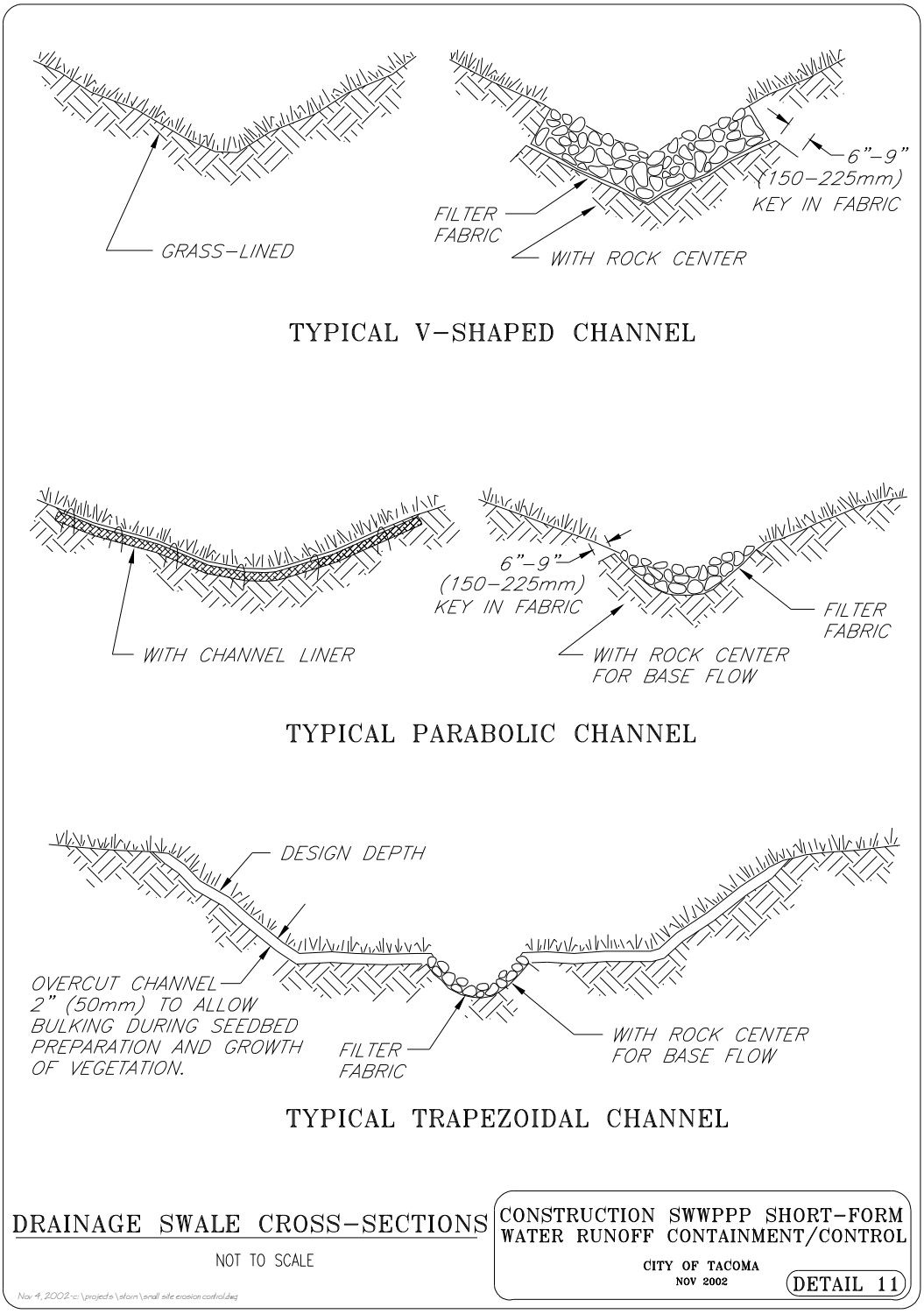

Figure II-C-50. Water Runoff Containment/Control – Drainage Swale Cross-Sections

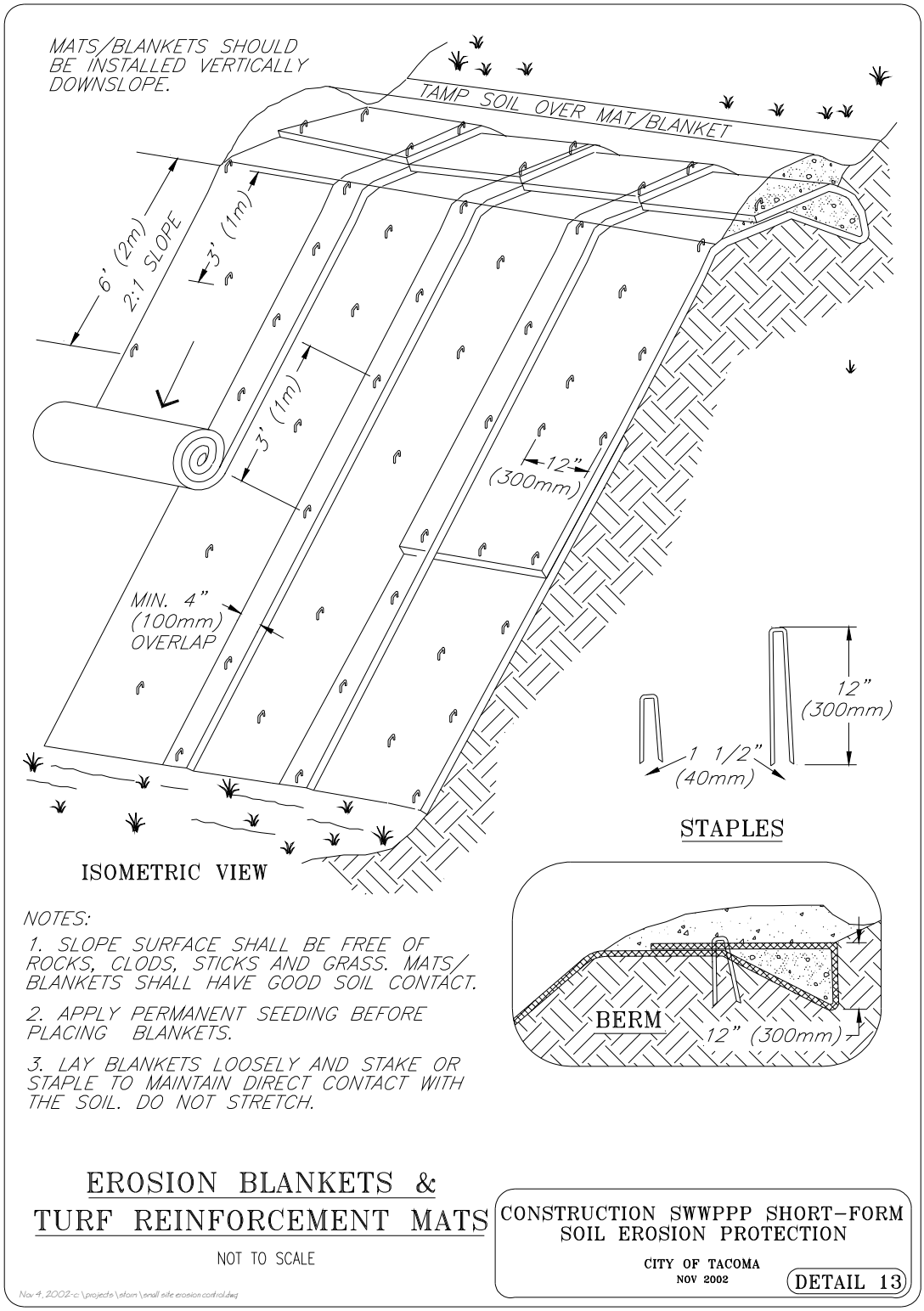

Figure II-C-51. Soil Erosion Protection – Erosion Blankets and Turf Reinforcement Mats

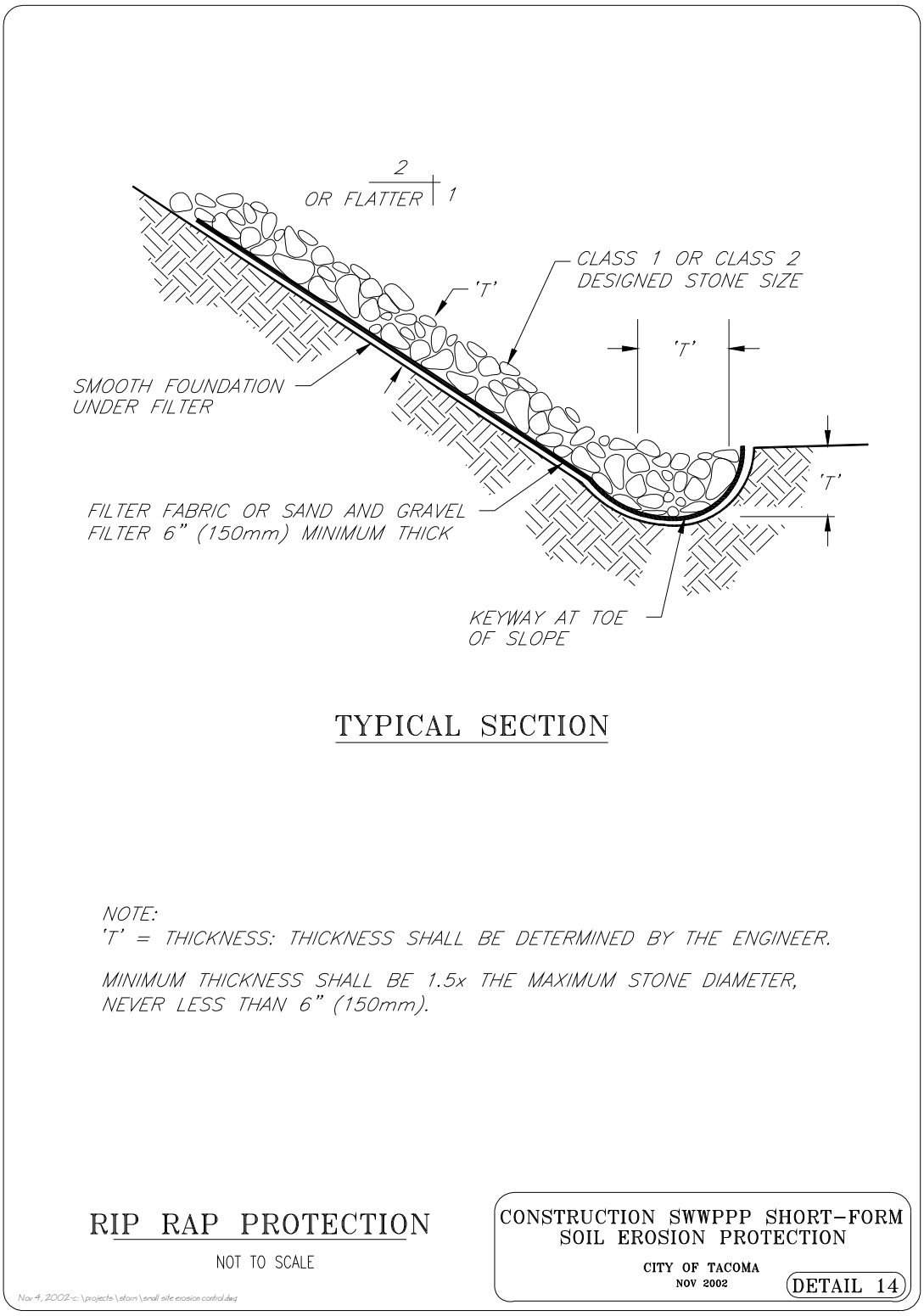

Figure II-C-52. Soil Erosion Protection – Rip Rap Protection

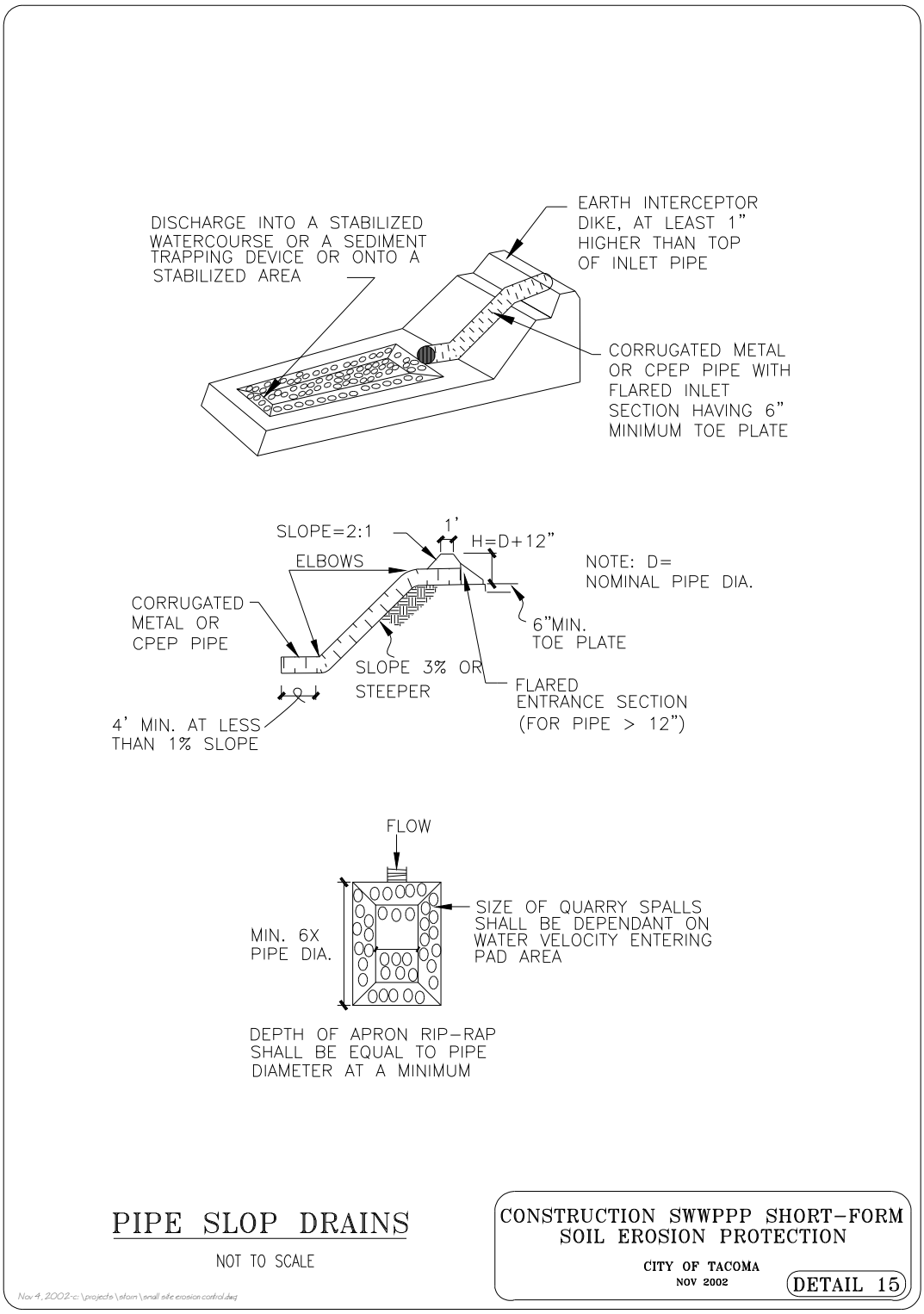

Figure II-C-53. Soil Erosion Protection – Pipe Slope Drains

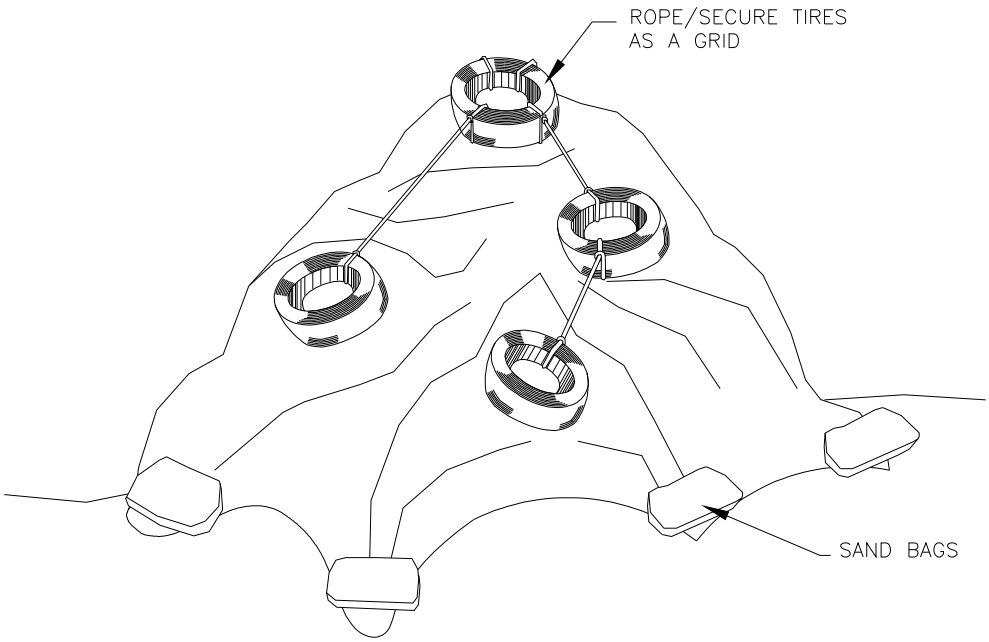

NOTE: USE OLD TIRES OR SAND BAGS
TO ANCHOR PLASTIC COVERING.

TARP COVERING

NOT TO SCALE

CONSTRUCTION SWWPPP SHORT-FORM
SOIL EROSION PROTECTION

CITY OF TACOMA
NOV 2002

DETAIL 16

Nov 4, 2002-c:\projects\storm\small site erosion control.dwg

Figure II-C-54. Soil Erosion Protection – Tarp Covering

Volume III – Surface Water Quantity Control and Conveyance Table of Contents

Purpose of this Volume 307
Content and Organization of this Volume 307

Chapter 1 Hydrologic Analysis 308

1.1 Minimum Computational Standards 308
1.2 Western Washington Hydrology Model 308
1.3 Single-Event Hydrograph Method 309
1.3.1 Design Storm 309
1.3.2 Curve Number 309
1.4 Closed Depression Analysis 310

Chapter 2 Flow Control Design 312

2.1 Roof Downspout Controls 312
2.1.1 Selection of Roof Downspout Controls 312
2.1.1.1 Roof Downspout Controls in Potential Landslide Hazard Areas 313
2.1.2 Downspout Infiltration Systems 313
2.1.2.1 Application 313
2.1.2.2 Flow Credit for Roof Downspout Infiltration 313
2.1.2.3 Procedure for Evaluating Feasibility 313
2.1.2.4 Design Criteria for Infiltration Trenches 314
2.1.3 Downspout Dispersion Systems 319
2.1.3.1 Application 319
2.1.3.2 Flow Credit for Roof Downspout Dispersion 319
2.1.3.3 General Design Criteria 319
2.1.4 Bioinfiltration “Rain Gardens” 321
2.1.5 Collect and Convey 326
2.2 Infiltration Facilities for Stormwater Flow Control 327
2.2.1 Purpose 327
2.2.2 Description 327
2.2.3 Application 327
2.2.4 Design Methodology 329
2.2.5 Simplified Approach 329
2.2.6 Detailed Approach 330

2.2.7 Site Characterization Criteria 334
2.2.7.1 Surface Features Characterization 335
2.2.7.2 Subsurface Characterization 335
2.2.7.3 Infiltration Rate Determination 335
2.2.7.4 Soil Testing 336
2.2.7.5 Infiltration Receptor 337
2.2.8 Design Infiltration Rate Determination – Guidelines and Criteria 338
2.2.9 Three Methods for Determining Long-term Infiltration Rates for Sizing Infiltration Facilities 339
2.2.10 Site Suitability Criteria (SSC) 343
2.2.10.1 SSC-1 Setback Criteria 344
2.2.10.2 SSC-2 Groundwater Protection Areas 344
2.2.10.3 SSC-3 High Vehicle Traffic Areas 344
2.2.10.4 SSC-4 Drawdown Time 345
2.2.10.5 SSC-5 Depth to Bedrock, Water Table, or Impermeable Layer 345
2.2.10.6 SSC-6 Seepage Analysis and Control 345
2.2.10.7 SSC-7 Cold Climate and Impact of Roadway Deicers 345
2.2.10.8 SSC-8 Verification Testing of the Completed Facility 345
2.2.11 Design Criteria for Infiltration Facilities 345
2.2.12 Construction Criteria 346
2.2.13 Maintenance Criteria 347
2.2.14 Verification of Performance 347
2.2.15 Infiltration Basins 347
2.2.16 Infiltration Trenches 349
2.2.16.1 Description: 349
2.2.16.2 Design Criteria 349
2.2.16.3 Construction Criteria 350
2.2.16.4 Maintenance Criteria 351
2.3 Detention Facilities 351
2.3.1 Detention Ponds 351
2.3.1.1 Dam Safety for Detention BMPs 351
2.3.1.2 Design Criteria 352
2.3.1.3 Methods of Analysis 366
2.3.2 Detention Tanks 367
2.3.2.1 Design Criteria 370
2.3.3 Detention Vaults 371
2.3.3.1 Design Criteria 373
2.3.3.2 Methods of Analysis 375
2.3.4 Control Structures 375
2.3.4.1 Design Criteria 375
2.3.4.2 Maintenance 376
2.3.4.3 Methods of Analysis 377
2.3.5 Other Detention Options 386

Chapter 3 Conveyance System Design and Hydraulic Analysis.....387
3.1 Conveyance System Analysis Requirements.....387
3.1.1 On-site Analysis.....387
3.1.2 Offsite Analysis (1/4 mile Downstream Analysis).....388
3.2 Design Event.....388
3.2.1 Additional Design Criteria.....389
3.3 Methods of Analysis.....389
3.3.1 Rational Method.....390
3.3.1.1 Rational Method Equation.....390
3.4 Pipes, Culverts and Open Channels.....396
3.4.1 Pipe Systems.....396
3.4.1.1 Design Flows.....396
3.4.1.2 Conveyance Capacity.....397
3.4.1.3 Backwater Analysis.....402
3.4.1.4 Inlet Grate Capacity.....406
3.4.1.5 Pipe Materials.....406
3.4.1.6 Pipe Sizes.....406
3.4.1.7 Changes in Pipe Sizes.....406
3.4.1.8 Pipe Alignment and Depth.....406
3.4.1.9 Pipe Slopes and Velocities.....407
3.4.1.10 Pipes on Steep Slopes.....407
3.4.1.11 Structures.....408
3.4.1.12 Pipe Clearances.....410
3.4.1.13 Pipe Cover.....411
3.4.1.14 System Connections.....411
3.4.1.15 Debris Barriers.....412
3.4.2 Culverts.....413
3.4.2.1 Design Event.....413
3.4.2.2 Design Flows.....413
3.4.2.3 Headwater.....413
3.4.2.4 Conveyance Capacity.....413
3.4.2.5 Inlet Control Analysis.....413
3.4.2.6 Outlet Control Analysis.....418
3.4.2.7 Inlets and Outlets.....424
3.4.3 Open Channels.....424
3.4.3.1 Natural Channels.....424
3.4.3.2 Constructed Channels.....424
3.4.3.3 Design Flows.....426
3.4.3.4 Conveyance Capacity.....431
3.4.3.5 Manning's Equation for Preliminary Sizing.....432
3.4.3.6 Direct Step Backwater Method.....432
3.4.3.7 Standard Step Backwater Method.....436
3.4.3.8 Computer Applications.....436

3.4.3.9 Riprap Design 436
3.5 Outfalls Systems 440
3.5.1 Outfall Design Criteria 440
3.5.1.1 Energy dissipation 441
3.5.1.2 Flow dispersion 441
3.5.2 Tightline Systems 448
3.5.3 Habitat Considerations 448
3.6 Pump Systems 448
3.6.1 Design Criteria 449
3.6.2 Pump Requirements 449
3.6.3 Additional Requirements 449
3.6.4 Sump Pumps 450
3.7 Easements and Access 450
3.7.1 Public Easements 450
3.7.2 Private Easements 451
3.7.3 Maintenance Access 451
Appendix A Auburn Design Storm 453
Appendix B Procedure for Conducting a Pilot Infiltration Test 454

Volume

III

Volume III: Surface Water Quantity Control and Conveyance

Purpose of this Volume

The purpose of this volume is to outline methods for calculating and designing methods to control the quantity of surface water runoff at developed sites. Quantity controls and on-site management for roof downspouts are described. Design criteria and methods of analysis for flow control BMPs are presented. Conveyance system requirements and design methods are also presented

Content and Organization of this Volume

Volume III of this manual contains three chapters and two appendices.

- Chapter 1 reviews methods of hydrologic analysis.
- Chapter 2 describes flow control design.
- Chapter 3 describes the requirements for analysis and design of surface water conveyance systems.
- Appendix A provides the Auburn Design Storm precipitation values.
- Appendix B describes the procedure for a Pilot Infiltration Test.

Chapter 1 Hydrologic Analysis

The purpose of this chapter is to define the minimum computational standards required, and outline how these computational standards may be applied.

1.1 Minimum Computational Standards

The minimum computational standards depend on the type of information required and the size of the drainage area to be analyzed, as follows:

- The most current software version of the Department of Ecology's Western Washington Hydrology Model (WWHM) model shall be used. Alternative models for sizing flow control and water quality facilities may be considered, provided they are Washington State Department of Ecology equivalent, and approved by the City of Auburn. Approval from the City shall be obtained prior to submittal of design documents.
- Model calibration shall be required for basins greater than 320 acres.

Exception: The Santa Barbara Urban Hydrograph method (SBUH) may be used to determine a water quality design storm volume for wetpond treatment facilities only.

Table III-1-1 summarizes the circumstances under which different design methodologies apply.

Table III-1-1. BMP Designs in Western Washington

Method		Treatment	Flow Control
Standard	Continuous Runoff Model (WWHM or approved equivalent)	Method applies to all BMPs.	Method applies throughout Auburn where flow control is required.
Alternative	SBUH	Wetpool water quality treatment facilities only.	Acceptable for City storm drainage system capacity problems.

1.2 Western Washington Hydrology Model

For most flow control design purposes, a continuous runoff model, such as the Western Washington Hydrology Model (WWHM), must be used. Information on the WWHM is provided in the Stormwater Management Manual for Western Washington (Washington State Department of Ecology, 2005). The software can be downloaded at the following website:

http://www.ecy.wa.gov/programs/wq/stormwater/wwhmtraining/index.html

More WWHM information is available at http://www.clearcreeksolutions.com

Note: Pre-developed conditions shall be modeled as a forested land cover with either outwash (Hydrologic Soil Group A/ B) or till (Hydrologic Soil Group C/D) soils. Saturated soil conditions shall only be considered when determining existing wetland hydrology.

1.3 Single-Event Hydrograph Method

Hydrograph analysis with a single event hydrograph method utilizes the standard plot of runoff flow versus time for a given design storm, allowing the key characteristics of runoff such as peak, volume, and phasing to be considered in the design of drainage facilities. Single event methods are only acceptable for sizing wetpool treatment facilities or for determining pipe capacity.

All storm event hydrograph methods require input of parameters that describe physical drainage basin characteristics. These parameters provide the basis from which the runoff hydrograph is developed.

1.3.1 Design Storm

The total depth of rainfall for storms of 24-hour duration and 2, 5, 10, 25, 50, and 100-year recurrence intervals are published by the National Oceanic and Atmospheric Administration (NOAA). The information is presented in the form of "isopluvial" maps for each state. Isopluvial maps are maps where the contours represent total inches of rainfall for a specific duration. Isopluvial maps for the 2, 5, 10, 25, 50, and 100-year recurrence interval and 24-hour duration storm events can be found in the NOAA Atlas 2, "Precipitation - Frequency Atlas of the Western United States, Volume IX-Washington." Based on these isopluvials, the following design storms shall be used for the City of Auburn:

6-month, 24-hour design storm:	1.44 inches
2-year, 24-hour design storm:	2.0 inches
10-year, 24-hour design storm:	3.0 inches
100-year, 24-hour design storm:	4.0 inches

1.3.2 Curve Number

Surface soils are classified by the National Resource Conservation Service into four hydrologic soil groups based on the soil's runoff potential: A, B, C, and D. Group A soils generally have the lowest runoff potential while Group D soils have the highest. In Auburn the valley floor is mostly Group D soils, which typically have very low infiltration rates and high runoff potential. The West Hill, Lea Hill, and Lakeland Hills areas are predominately Group C soils, which have low infiltration rates and moderate to high runoff potential. The southeast area, Bowman Creek area, and valley area located between Highway 18 and the White River contain some Group A soils, which are characterized by high infiltration rates and low runoff potential. Soils within the City limits shall be assumed to fall in the Hydrologic Soils Groups as shown in figure 4-4 of the City of Auburn Comprehensive Drainage Plan unless grain size distribution and/or permeability testing indicate otherwise. Refer to Section 2.2.7.4 for details on appropriate soil testing methods.

Table III-1-2 shows the curve numbers (CNs), by land use description, for the four hydrologic soil groups. These numbers are for a 24-hour duration storm and the typical antecedent soil moisture condition preceding 24-hour storms.

The following are important criteria/considerations for selection of CN values.

Many factors may affect the CN value for a given land use. For example, the movement of heavy equipment over bare ground may compact the soil so that it has a lesser infiltration rate and greater runoff potential than would be indicated by strict application of the CN value to developed site conditions.

CN values can be area weighted when they apply to pervious areas of similar CNs (within 20 CN points). However, high CN areas should not be combined with low CN areas. In this case, separate estimates of S (potential maximum natural detention) and Qd (runoff depth) should be generated and summed to obtain the cumulative runoff volume unless the low CN areas are less than 15 percent of the sub-basin.

Separate CN values must be selected for the pervious and impervious areas of an urban basin or sub-basin. For residential districts, the percent impervious area given in Table III-1-2 must be used to compute the respective pervious and impervious areas. For proposed commercial areas, plats, etc., the percent impervious area must be computed from the site plan. For all other land uses, the percent impervious area must be estimated from best available aerial topography and/or field reconnaissance. The pervious area CN value must be a weighted average of all the pervious area CNs within the sub-basin. The impervious area CN value shall be 98.

1.4 Closed Depression Analysis

The analysis of closed depressions requires careful assessment of the existing hydrologic performance in order to evaluate the impacts of a proposed project. A calibrated continuous simulation hydrologic model must be used for closed depression analysis and design of mitigation facilities. The applicable requirements of this manual (see Minimum Requirement #7 and #8) and the City's Critical Areas Ordinance and Rules should be thoroughly reviewed prior to proceeding with the analysis.

Closed depressions generally facilitate infiltration of runoff. If a closed depression is classified as a wetland, then Minimum Requirement #8 for wetlands applies. If there is an outflow from the wetland to a surface water (such as a creek), then the flow from the wetland must also meet Minimum Requirement #7 for flow control. If a closed depression is not classified as a wetland, the ponding area at the bottom of the closed depression should be modeled as an infiltration pond.

Guidance for modeling closed depressions and model calibration shall be provided by the Department of Public Works.

Table III-1-2. Runoff Curve Numbers for Selected Agricultural, Suburban and Urban Areas

(Sources: TR 55, 1986, and Stormwater Management Manual, 1992. See Section 2.1.1 for explanation)

Cover type and hydrologic condition.	CNs for hydrologic soil group A	B	C	D
Curve Numbers for Pre-Development Conditions				
Pasture, grassland, or range-continuous forage for grazing:				
Fair condition (ground cover 50% to 75% and not heavily grazed).	49	69	79	84
Good condition (ground cover >75% and lightly or only occasionally grazed)	39	61	74	80
Woods:				
Fair (Woods are grazed but not burned, and some forest litter covers the soil).	36	60	73	79
Good (Woods are protected from grazing, and litter and brush adequately cover the soil).	30	55	70	77
Curve Numbers for Post-Development Conditions				
Open space (lawns, parks, golf courses, cemeteries, landscaping, etc.)[1]				
Fair condition (grass cover on 50% - 75% of the area).	77	85	90	92
Good condition (grass cover on >75% of the area)	68	80	86	90
Impervious areas:				
Open water bodies: lakes, wetlands, ponds etc.	100	100	100	100
Paved parking lots, roofs[2], driveways, etc. (excluding right-of-way)	98	98	98	98
Permeable Pavement (see Appendix C of 2005 Ecology Manual to decide which condition applies)				
Landscaped area	77	85	90	92
50% landscaped area/50% impervious	87	91	94	96
100% impervious area	98	98	98	98
Paved	98	98	98	98
Gravel (including right-of-way)	76	85	89	91
Dirt (including right-of-way)	72	82	87	89
Pasture, grassland, or range-continuous forage for grazing:				
Poor condition (ground cover <50% or heavily grazed with no mulch).	68	79	86	89
Fair condition (ground cover 50% to 75% and not heavily grazed).	49	69	79	84
Good condition (ground cover >75% and lightly or only occasionally grazed)	39	61	74	80
Woods:				
Poor (Forest litter, small trees, brush are destroyed by heavy grazing or regular burning).	45	66	77	83
Fair (Woods are grazed but not burned, and some forest litter covers the soil).	36	60	73	79
Good (Woods are protected from grazing, and litter and brush adequately cover the soil).	30	55	70	77

Single family residential[3]**:** Dwelling Unit/Gross Acre	Should only be used for subdivisions > 50 acres	Average Percent impervious area[3,4]	
1.0 DU/GA		15	Separate curve number shall be selected for pervious & impervious portions of the site or basin
1.5 DU/GA		20	
2.0 DU/GA		25	
2.5 DU/GA		30	
3.0 DU/GA		34	
3.5 DU/GA		38	
4.0 DU/GA		42	
4.5 DU/GA		46	
5.0 DU/GA		48	
5.5 DU/GA		50	
6.0 DU/GA		52	
6.5 DU/GA		54	
7.0 DU/GA		56	
7.5 DU/GA		58	
PUDs, condos, apartments, commercial businesses, industrial areas & & subdivisions < 50 acres	%impervious must be computed	Separate curve numbers shall be selected for pervious and impervious portions of the site	

For a more detailed and complete description of land use curve numbers refer to chapter two (2) of the Soil Conservation Service's Technical Release No. 55, (210-VI-TR-55, Second Ed., June 1986).

[1] Composite CNs may be computed for other combinations of open space cover type.
[2] Where roof runoff and driveway runoff are infiltrated or dispersed according to the requirements in Chapter 2, the average percent impervious area may be adjusted in accordance with the procedure described under "Flow Credit for Roof Downspout Infiltration" and "Flow Credit for Roof Downspout Dispersion" in Volume 6, Chapter 2.
[3] Assumes roof and driveway runoff is directed into street/storm system.
[4] All the remaining pervious area (lawn) is considered to be in good condition for these curve numbers.

Chapter 2 Flow Control Design

2.1 Roof Downspout Controls

This section presents the criteria for design and implementation of roof downspout controls. *Roof downspout controls* are simple pre-engineered designs for infiltrating and/or dispersing runoff from roof areas for the purposes of increasing opportunities for groundwater recharge and reduction of runoff volumes from new development or redevelopment.

For roof areas below 10,000 square feet, these designs may typically be implemented with a single test pit, unless directed otherwise by the City. For designs other than those presented in Section 2.1, the requirements of Section 2.2 shall apply.

Roof downspout controls are used in conjunction with, and in addition to, any additional flow control facilities that may be necessary to mitigate stormwater impacts from the overall development. Implementation of roof downspout controls may reduce the total effective impervious area and result in less runoff from these surfaces. Flow credits for implementing infiltration and dispersion for controls are available as follows:

- If all the roof runoff is infiltrated according to the requirements of this section, the roof
- area may be discounted from the total project area used for determining project thresholds and sizing stormwater facilities.
- If roof runoff is dispersed according to the requirements of this section on lots greater than 22,000 square feet and the vegetative flow path is 50 feet or longer through undisturbed native landscape or lawn/landscape area that meets BMP L613, the roof area may be modeled as grassed surface.

Additional information on flow credits is available in Volume VI, Chapter 2.

2.1.1 Selection of Roof Downspout Controls

Large lots in rural areas (5 acres or greater) typically have enough area to disperse or infiltrate roof runoff. **Lots created in urban areas will typically be smaller and have a limited amount of area in which to infiltrate or disperse stormwater.** Downspout infiltration may be used in those soils that readily infiltrate (coarse sands and cobbles to medium sands). Dispersion BMPs may be used for urban lots located in less permeable soils, where infiltration is not feasible. **Where infiltration and/or dispersion is not feasible because of very small lot size, or where there is a potential for creating drainage problems on adjacent lots, downspouts shall be connected to the street storm drain system, which directs the runoff to a regional facility or receiving water.**

Where roof downspout controls are planned, the following methods should be considered in descending order of preference:

- Rain gardens (Section 2.1.4)
- Downspout infiltration systems (Section 2.1.2)
- Downspout dispersion systems (Section 2.1.3)

- Collect and convey to the City stormwater system – only allowed if it can be demonstrated that infiltration and dispersion are not feasible.

2.1.1.1 Roof Downspout Controls in Potential Landslide Hazard Areas

If or where the City has identified "geologically hazardous areas" (WAC 365-195-410), lots immediately adjacent to or within the hazard area shall collect roof runoff in a tightline system which conveys the runoff to the City system or to the base of the slope and then into the City system. Easements across adjacent properties may be necessary to convey drainage to the City system.

2.1.2 Downspout Infiltration Systems

Downspout infiltration systems are trenches designed for flow control and are intended only for use in infiltrating runoff from roof downspout drains. They are not designed to infiltrate directly runoff from pollutant-generating impervious surfaces. Volume V, Chapter 5 contains a discussion of infiltration trenches for water quality treatment.

2.1.2.1 Application

Use downspout infiltration on all sites that meet feasibility and setback requirements.

2.1.2.2 Flow Credit for Roof Downspout Infiltration

If roof runoff is infiltrated according to the requirements of this section, the roof area may be discounted from the project area used for determining project thresholds and sizing stormwater facilities.

2.1.2.3 Procedure for Evaluating Feasibility

A soils report to determine if soils suitable for infiltration are present on the site shall be prepared by a professional soil scientist certified by the Soil Science Society of America (or an equivalent national program), a locally licensed onsite sewage designer, other suitably trained professional engineer, geologist, hydrogeologist, or engineering geologist registered in the State of Washington, or persons working under the supervision of one of the soils professional listed here.

NOTE: On sites where soils are insufficient for infiltration, a downspout dispersion system per Section 2.1.3 may be feasible in lieu of infiltration.

1. Where downspout infiltration is being proposed, additional site-specific testing must be done. For single lots, at least one soils log at the location of the infiltration system is required. It must be a minimum of 4 feet deep (from proposed grade). Identify the SCS series of the soil and the USDA textural class of the soil horizon through the depth of the log, and note any evidence of high groundwater level, such as mottling.
2. If site-specific tests indicate less than 3 feet of permeable soil from the proposed final grade to the seasonal high groundwater table, a downspout infiltration system is not feasible and a downspout dispersion system per Section 2.1.3 may be feasible in lieu of infiltration.

3. On lots or sites with more than 3 feet of permeable soil from the proposed final grade to the seasonal high groundwater table, downspout infiltration is considered feasible if the soils are outwash type soils and the infiltration trench can be designed to meet the minimum design criteria specified below. Under no circumstances shall the seasonal high groundwater table be less then 1 foot from the bottom of the infiltration trench.

2.1.2.4 Design Criteria for Infiltration Trenches

Figure III-2-1 shows a typical downspout infiltration trench system, and Figure III-2-2 presents an alternative infiltration trench system for sites with coarse sand and cobble soils. These systems are designed as specified below. Alternate trench lengths require modeling per Section 2.2.

General

1. The following minimum lengths (in linear feet [LF]) per 1,000 square feet of roof area based on soil type may be used for sizing downspout infiltration trenches.

Coarse sands and cobbles	20 LF
Medium sand	30 LF
Fine sand, loamy sand	75 LF
Sandy loam	125 LF
Loam	190 LF

2. Maximum length of trench must not exceed 100 feet from the inlet sump.

3. Minimum spacing between trenches shall be 4 feet measured from the edge of trench.

4. Filter fabric must be placed over the drain rock as shown on Figure III-2-1 prior to backfilling.

5. Three feet of permeable soil, measured from the proposed final grade to the seasonal high groundwater table is required.

6. A minimum of 1 foot of separation is required from the bottom of the infiltration trench to the seasonal high groundwater table.

7. Infiltration trenches may be placed in fill material if the fill is placed and compacted under the direct supervision of a geotechnical engineer or professional civil engineer with geotechnical expertise, and if the measured infiltration rate is at least 8 inches per hour. Trench length in fill must be 60 linear feet per 1,000 square feet of roof area. Infiltration rates can be tested using the methods described in Section 2.2.7.3.

8. Infiltration trenches shall not be built on slopes steeper than 20 percent (5H:1V). A geotechnical analysis and report shall be required on slopes over 15 percent or if located within 200 feet of the top of steep slope (40% or greater) or landslide hazard area. More stringent setbacks may be required as described in Auburn City Code.

9. Trenches may be located under pavement if a small yard drain or catch basin with grate cover is placed at the end of the trench pipe such that overflow would occur out of the catch basin at an elevation at least one foot below that of the pavement, and in a location which can

accommodate the overflow without creating a significant adverse impact to downhill properties or drainage systems. This is intended to prevent saturation of the pavement in the event of system failure.

Setbacks

The City requires specific setbacks for sites with steep slopes, landslide areas, open water features, springs, wells, and septic tank drain fields. Adequate room for maintenance access and equipment shall also be considered. Project proponents should consult Auburn City Code to determine all applicable setback requirements. Where a conflict between setbacks occurs, the City shall require compliance with the most stringent of the setback requirements from the various codes/regulations. Required setbacks are as follows or as determined by a qualified geotechnical engineer:

- Minimum spacing between trenches shall be 4 feet measured from the edge of trench.
- Stormwater infiltration facilities shall be set back at least 100 feet from drinking water wells and springs used for public drinking water supplies. Stormwater infiltration facilities shall be set back at least 10 feet from septic tanks and septic drainfields. Additional setbacks from DOH publication 333-117 On-Site Sewage Systems, Chapter 246-272A WAC may apply. Infiltration facilities upgradient of drinking water supplies and within 1, 5, and 10-year time of travel zones must comply with Health Department requirements (Washington Wellhead Protection Program, DOH, Publication # 331-018).
- All infiltration systems shall be at least 10 feet from any structure. If necessary, setbacks shall be increased from the minimum 10 feet in order to maintain a 1H:1V side slope for future excavation and maintenance.
- All infiltration systems shall be placed at least 5 feet from any property line. If necessary, setbacks shall be increased from the minimum 5 feet in order to maintain a 1H:1V side slope for future excavation and maintenance.
- Infiltration systems shall be setback from sensitive areas, steep slopes, landslide hazard areas, and erosion hazard areas as governed by Auburn City Code. Runoff discharged near landslide hazard areas must be evaluated by a geotechnical engineer or qualified geologist licensed in Washington State. The discharge point shall not be placed on or above slopes greater than 20% (5H:1V) or above erosion hazard areas without evaluation by a geotechnical engineer or qualified geologist and City approval. Infiltration trenches should not be built on slopes steeper than 20%.
- For sites with septic systems, infiltration systems shall be downgradient of the drainfield unless the site topography clearly prohibits surface flows from intersecting the drainfield.

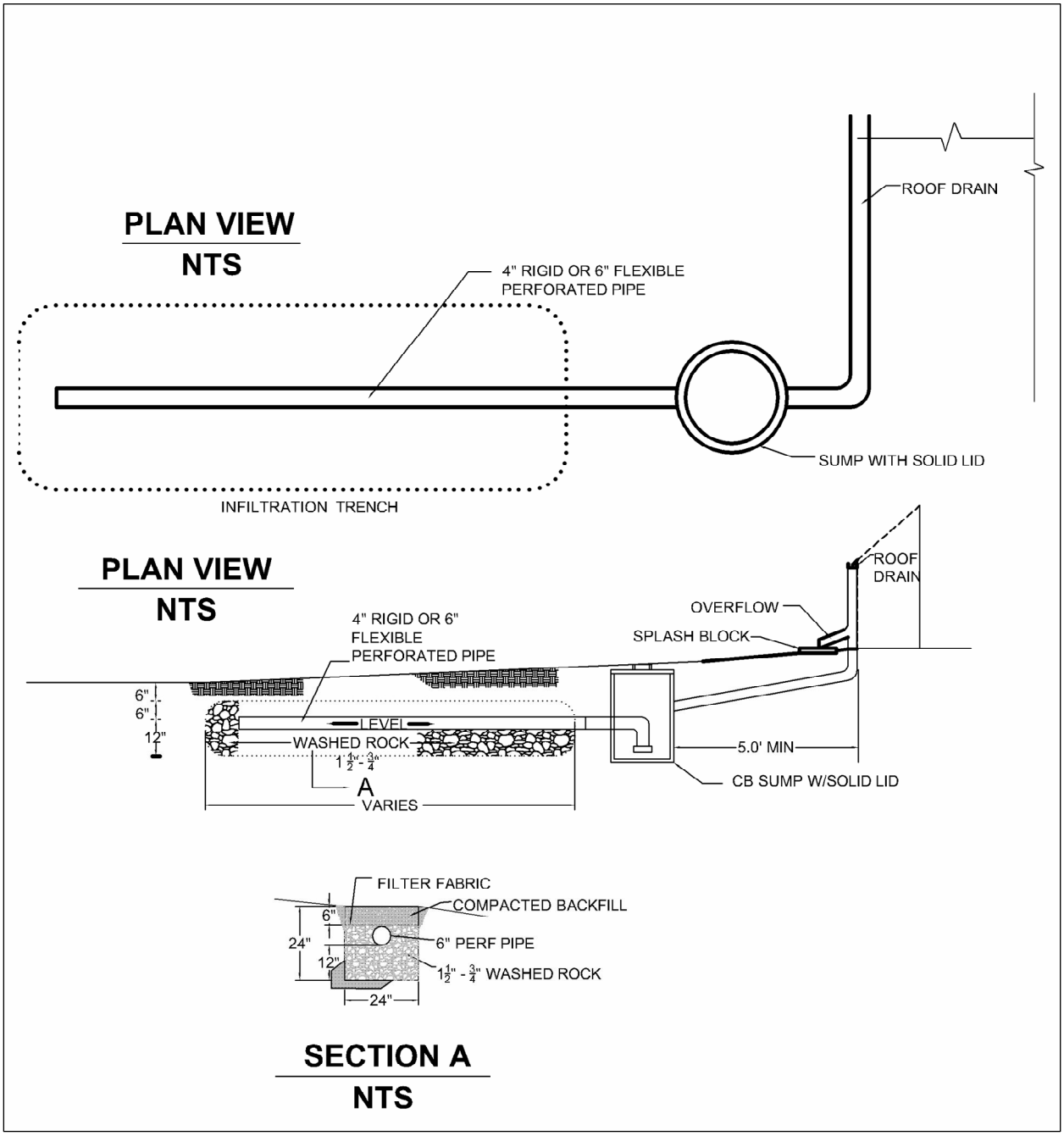

Figure III-2-1. Typical Downspout Infiltration Trench

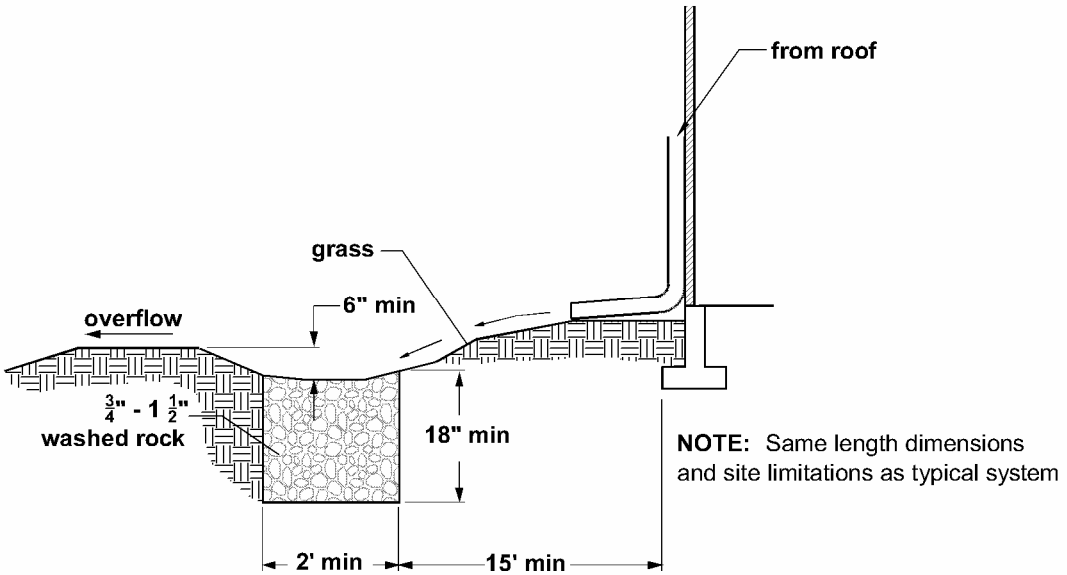

X-SECTION
NTS

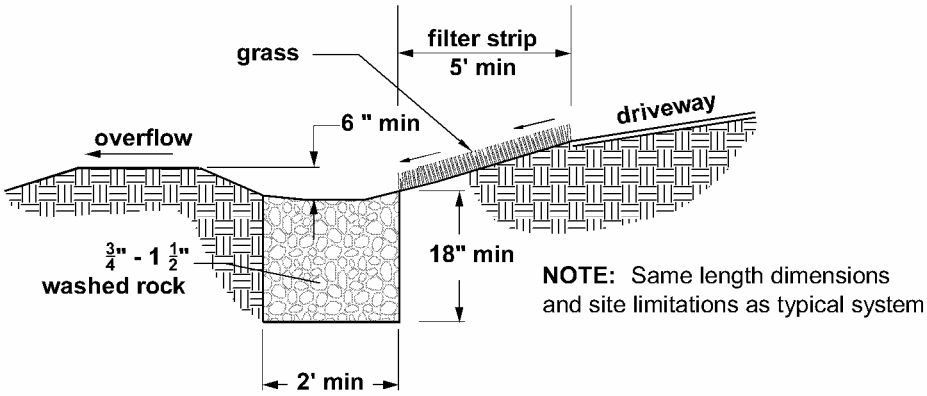

X-SECTION
NTS

Figure III-2-2. Alternative Downspout Infiltration Trench System for Coarse Sand and Gravel

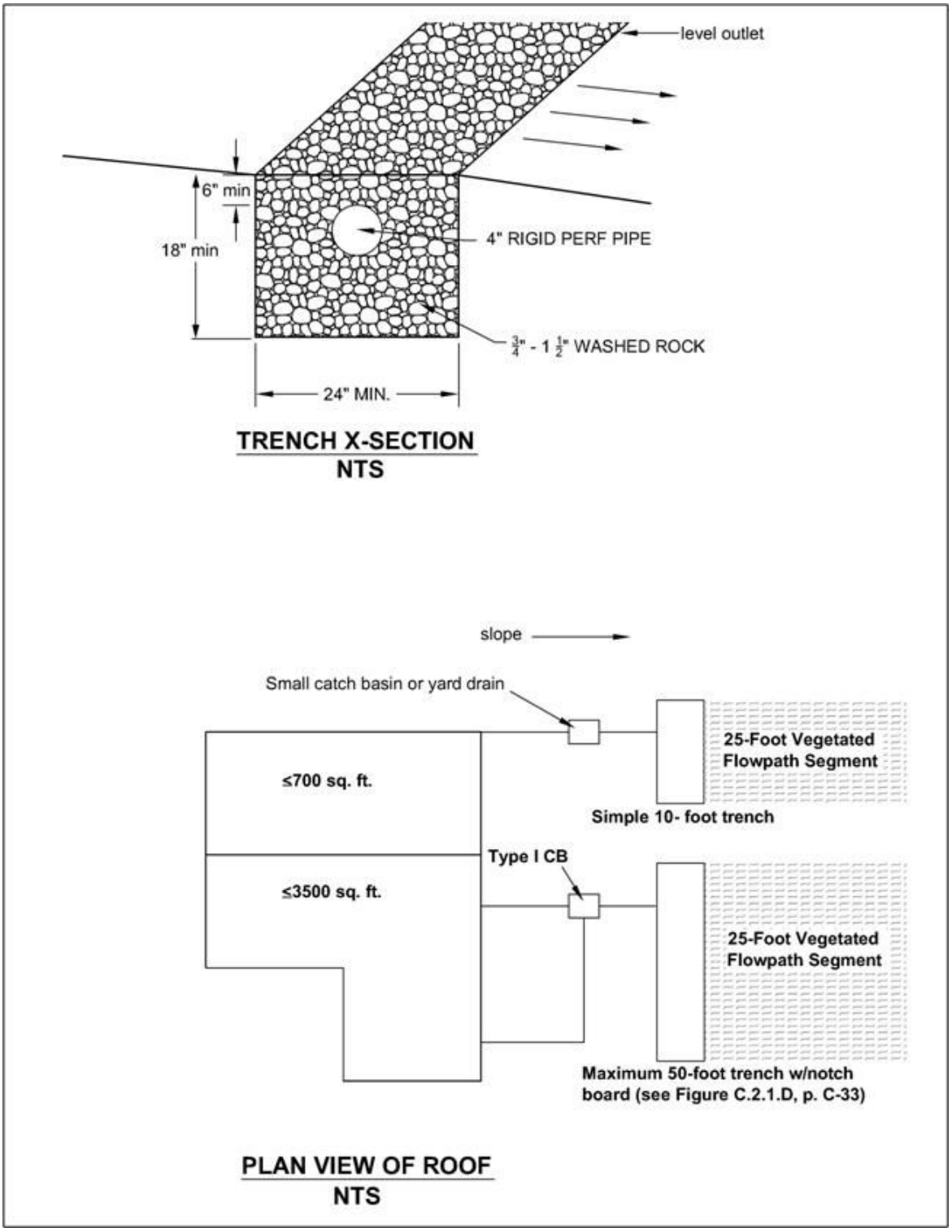

Figure III-2-3. Typical Downspout Dispersion Trench

2.1.3 Downspout Dispersion Systems

Downspout dispersion systems are splash blocks or dispersion facilities that spread roof runoff over vegetated pervious areas. Dispersion attenuates peak flows by slowing entry of the runoff into the conveyance system, allowing for some infiltration, and providing some water quality benefits. Also refer to BMP L610, Downspout Dispersion, in Volume VI.

2.1.3.1 Application

Downspout dispersion may be used on all sites that cannot infiltrate roof runoff and that meet the feasibility and setback requirements.

2.1.3.2 Flow Credit for Roof Downspout Dispersion

If roof runoff is dispersed according to the requirements of this section, and the *vegetative flow*[1] path of the roof runoff is 50 feet or greater through undisturbed native landscape or lawn/landscape area that meets BMP L613, the roof area may be modeled as a grassed surface for both threshold determination and modeling.

2.1.3.3 General Design Criteria

- Downspout dispersion trenches designed as shown in Figure III-2-3 should be used for all downspout dispersion applications except where splash blocks are allowed.
- Perforated stub-out connections shall not be used.
- For sites with septic systems, the discharge point of all dispersion systems must be downgradient of the drainfield. This requirement may be waived if site topography clearly prohibits flows from intersecting the drainfield.
- For sites with septic systems, the discharge point must be downslope of the primary and reserve drainfield areas. This requirement may be waived if site topography clearly prohibits flows from intersecting the drainfield or where site conditions (soil permeability, distance between systems, etc) indicate that this is unnecessary.
- Place all dispersion systems at least 5 feet from any property line. If necessary, setbacks shall be increased from the minimum 5 feet in order to maintain a 1:1 side slope for future excavation and maintenance.
- Setback dispersion systems from sensitive areas, steep slopes, landslide hazard areas, and erosion hazard areas as governed by Auburn City Code.
- All dispersions systems shall be at least 10 feet from any structure. If necessary, setbacks shall be increased from the minimum 10 feet in order to maintain a 1H:1V side slope for future excavation and maintenance.
- No erosion or flooding of downstream properties shall result.

---

[1] *Vegetative flow* path is measured from the downspout or dispersion system discharge point perpendicular to the topographic contours to the downstream property line, stream, wetland, or other impervious surface.

- Runoff discharged towards landslide hazard areas must be evaluated by a geotechnical engineer or a licensed geologist, hydrogeologist, or engineering geologist. The discharge point shall not be placed on or above slopes greater than 20% (5H:1V) or above erosion hazard areas without evaluation by a geotechnical engineer or qualified geologist and City approval.

Design Criteria for Dispersion Trenches

- A vegetated flowpath of at least 25 feet in length must be maintained between the outlet of the trench and any property line, structure, stream, wetland, or impervious surface. A vegetated flowpath of at least 50 feet in length must be maintained between the outlet of the trench and any slope, 20% or greater. Sensitive area buffers may count towards flowpath lengths if approved by the City of Auburn.
- Trenches serving up to 700 square feet of roof area may be simple 10-foot-long by 2-foot-wide gravel filled trenches as shown in Figure III-2-3. For roof areas larger than 700 square feet, a dispersion trench with notched grade board may be used as approved by the City. The total length of this design must not exceed 50 feet and must provide at least 10 feet of trench per 700 square feet of roof area.
- Dispersion systems shall be setback from sensitive areas, steep slopes, landslide hazard areas, and erosion hazard areas as governed by Auburn City Code.

Design Criteria for Splashblocks

A typical downspout splashblock is shown in Volume VI section 2.2.1.1 BMP L610 Downspout Dispersion. In general, if the ground is sloped away from the foundation and there is adequate vegetation and area for effective dispersion, splashblocks will adequately disperse storm runoff. If the ground is fairly level, if the structure includes a basement, or if foundation drains are proposed, splashblocks with downspout extensions may be a better choice because the discharge point is moved away from the foundation. Downspout extensions can include piping to a splashblock/discharge point a considerable distance from the downspout, as long as the runoff can travel through a well-vegetated area as described below.

- A vegetated flow path of at least 50 feet shall be maintained between the discharge point and any property line, structure, steep slope, stream, wetland, lake, or other impervious surface. Sensitive area buffers may count toward flow path lengths. The minimum spacing between splash blocks shall be 10 feet on a contour line.
- Flows shall not be directed onto sidewalks.
- A maximum of 700 square feet of roof area may drain to each splashblock.
- A splashblock or a pad of crushed rock (2 feet wide by 3 feet long by 6 inches deep) shall be placed at each downspout discharge point.
- No erosion or flooding of downstream properties may result.
- Runoff discharged towards landslide hazard areas must be evaluated by a professional engineer with geotechnical expertise or a licensed geologist, hydrogeologist, or engineering geologist. Splash blocks may not be placed on or above slopes greater than 20% (5H:1V) or above erosion hazard areas without

evaluation by a professional engineer with geotechnical expertise or qualified geologist and City approval.

2.1.4 Bioinfiltration "Rain Gardens"

Purpose and Definition

Bioretention areas are shallow stormwater retention systems designed to mimic forested systems by controlling stormwater through detention, infiltration, and evapotranspiration. Bioretention areas provide water quality treatment through sedimentation, filtration, adsorption, and phytoremediation. Bioretention facilities are integrated into the landscape to better mimic natural hydrologic conditions. Bioretention facilities may be used as a water quality facility or a water quality and flow control (retention) facility.

Use "Low Impact Development: Technical Guidance Manual for Puget Sound" and Washington State University "Rain Garden Handbook for Western Washington Homeowners", June 2007 as additional guidance resources.

Applicability and Limitations

- Rain gardens can be used as on-lot retention facilities.
- Rain gardens may be used to receive roof runoff in areas where traditional infiltration is not feasible.
- Three feet of clearance is necessary between the lowest elevation of the bioretention soil or any underlying gravel layer and the seasonal high groundwater elevation or other impermeable layer if the area tributary to the facility meets or exceeds any of the following:
  - 5000 square feet of pollution-generating impervious surface
  - 10,000 square feet of impervious area
  - ¾ acre of lawn and landscape
- For bioretention systems with a contributing area less than the above thresholds, a minimum of 18 inches of clearance is required from the seasonal high groundwater or other impermeable layer.

Setback and Site Constraints

- Assure that water movement through the surface soils and interflow will remain unobstructed and soils will remain uncompacted.
- Locate bioretention facilities at least 10 feet from any structure or property line unless approved in writing by the City.
- Locate bioretention facilities at least 50 feet back from slopes with a grade of 20% or greater. A geotechnical analysis must be prepared addressing the potential impact of the facility on the slope if closer than 50 feet or greater than 20%.

Design Criteria

Flow Entrance/Presetting

- Flow velocity entering the facility should be less than 1 ft/sec.
- Use one of the four types of flow entrances:
  - Dispersed, low velocity flow across a grade or landscape area.
  - Pipe flow entrance. Include rock or other erosion protection material at the facility entrance to dissipate energy and/or provide flow dispersion.
- Do not place woody plants directly in the entrance flow path as they can restrict or concentrate flows.
- A minimum 1-inch grade change between the edge of a contributing impervious surface and the vegetated flow entrance is required.
- Install flow diversion and erosion control measures to protect the bioretention area from sedimentation until the upstream area is stabilized.
- If the catchment area exceeds 2,000 square feet, a presettling facility may be required.

Cell Ponding Area

- The ponding area provides for surface storage and particulate settling,
- Ponding depth and drawdown rate provide variable conditions that allow for a range of appropriate plant species. Soil must be allowed to dry out periodically in order to:
  - Restore hydraulic capacity of system.
  - Maintain infiltration rates.
  - Maintain adequate soil oxygen levels for healthy soil biota and vegetation.
  - Provide proper soil conditions for biodegradation and retention of pollutants.
  - Prevent conditions supportive of mosquito breeding.
- The ponding depth shall be a maximum of 12 inches.
- The surface pool drawdown time shall be 24 hours.
- The minimum freeboard measured from the invert of the overflow pipe or earthen channel to facility overtopping elevation shall be 2” for drainage areas less than 1,000 square feet and 6” for drainage areas 1,000 square feet or greater.
- If berming is used to achieve the minimum top elevation, maximum slope on berm shall be 4H:1V, and minimum top width of design berm shall be 1 foot. Soil for berming shall be imported bioretention soil or amended native soil compacted to a minimum of 90% dry density.

Overflow

- Unless designed for full infiltration of the entire runoff volume, bioretention systems must include an overflow.
- A drain pipe installed at the designed maximum ponding elevation and connected to a downstream BMP or an approved discharge point can be used as the overflow.
- Overflow shall be designed to convey the 100-year recurrence interval flow.

Soils

- For bioretention systems to meet the requirements for basic and enhanced treatment the following requirements must be met:
- The bioretention soil mix (BSM) shall meet the following requirements:
  - Have an infiltration rate between 1 and 2.4 inches per hour.
  - The CEC (cation exchange capacity) must be at least 5 meq/100 grams of dry soil.
  - The soil mix should be about 40% by volume compost and about 60% by volume aggregate component. The aggregate component shall meet the specifications in Table III-2-3.
  - The compost component shall be stable, mature, and derived from organic waste materials including yard debris, wood wastes or other organic matter. Compost must meet the Washington State compost regulations in WAC 173-350-220, which is available at http://www.ecy.wa.gov/programs/swfa/compost

Table III-2-3. Bioretention Soil Mix Aggregate Component

Sieve Size	Percent Passing
3/8”	100
#4	95-100
#10	75-90
#40	25-40
#100	4-10
#200	2-5

  - Minimum depth of treatment soil must be 18 inches.
  - Soil depths of 24” and greater should be considered to provide improved removal of nutrients as needed, including phosphorus.

- Provide a soils report, prepared by a soils professional, that addresses the following for each bioretention area:
  - A minimum of one soil log or test pit is required at each facility.
  - The soil log shall extend a minimum of 4 feet below the bottom of the subgrade (the lowest point of excavation).
  - The soil log must describe the USDA textural class of the soil horizon through the depth of the log and note any evidence of high groundwater level, such as mottling.

Underdrain

Only install underdrains in bioretention areas if:

- Infiltration is not permitted and/or a liner is used, or
- Where infiltration rates are not adequate to meet the maximum pool drawdown time.
- Where the facility is not utilized for infiltration.

Underdrain pipe diameter will depend on hydraulic capacity required, 6-inch minimum.

Use a geotextile fabric between the soil layer and underdrain.

Planting

- Plants must be tolerant of summer drought, ponding fluctuations, and saturated soil conditions.
- Consider rooting depth when choosing plants. Roots must not damage underground infrastructure.
- Locate slotted and perforated pipe at least 5 feet from tree roots and side sewer pipes.
- Consider adjacent plant communities and potential invasive species.
- Consider aesthetics, rain gardens should blend into surrounding landscapes.
- “Low Impact Development: Technical Guidance Manual for Puget Sound” is a good tool for selecting proper bioretention vegetation.

Mulch Layer

- Bioretention areas should be designed with a mulch layer. Properly selected mulch material reduces weed establishment, regulates soil temperatures and moisture, and adds organic matter to soil. Mulch should be:
  - Compost in the bottom of the facilities,
  - Wood chip mulch composed of shredded or chipped hardwood or softwood on cell slopes,

  - Free of weed seeds, soil, roots, and other material that is not trunk or branch wood and bark,
  - A maximum of 3 inches thick for compost or 4 inches thick for wood chips.
- Mulch shall not include grass clippings, mineral aggregate or pure bark.
- A dense groundcover can be used as an alternative to mulch though mulch most be used until the dense groundcover is established.

Modeling and Sizing

For sites with contributing area less than 2,000 square feet:

Table III-2-4 gives the square footage of the bottom of the rain garden per 1000 square feet of roof area.

Table III-2-4. Sizing Table for Rain Gardens

Soil Type	Raingarden bottom (square feet)
Coarse sands and cobbles	25
Medium sands	60
Fine sands, loamy sands	130
Sandy loam	160
Loam	225

For sites with contributing areas 2,000 square feet or more:

Use WWHM and model the facility as an infiltration facility with appropriate stage-storage and overflow/outflow rates. Bioretention cells may be modeled as a layer of soil with infiltration to underlying soil, ponding and overflow. The tributary area, cell bottom area, and ponding depth should be iteratively sized until the duration curves and/or peak volumes meet the flow control requirements.

NOTE: WWHM Pro has the ability to model bioretention areas with or without underdrains so facility will be sized differently than described above. Contact the Washington State Department of Ecology for more information. Use the assumptions in Table III-2-5 when sizing the facilities.

Table III-2-5. Modeling Assumptions for Rain Garden Sizing

Variable	Assumption
Computational Time Step	15 minutes
Inflows to Facility	Surface flow and interflow from drainage area routed to facility
Precipitation and Evaporation Applied to Facility	Yes
Bioretention Soil Infiltration Rate	For imported soils, for sites that have a contributing area of less than 5,000 square feet of pollution generating surfaces, less than 10,000 square feet of impervious area, and less than ¾ acre of landscaped area, reduce the infiltration rate of the BSM by a factor of 2. For sites above these thresholds, a reductions factor of 4 shall be applied. For compost amended native soil, rate is equal to native soil design infiltration rate.
Bioretention Soil Porosity	40%
Bioretention Soil Depth	Minimum of 18 inches.
Native Soil Infiltration Rate	Measured infiltration rate with applicable safety factors. See Volume III for more information on infiltration rate determination.
Infiltration Across Wetted Surface Area	Only if sides slopes are 3:1 or flatter
Overflow	Overflow elevation set at maximum ponding elevation (excluding freeboard). May be modeled as weir flow over rider edge or riser notch.

Flow Credit

If roof runoff is infiltrated according to the requirements of this section, the roof area may be discounted from the project area used for determining project thresholds and sizing stormwater facilities.

2.1.5 Collect and Convey

Where it can be demonstrated that infiltration and dispersion are not feasible for roof downspout controls, it may be allowable to collect and convey to the City stormwater system. This may be either the curb, if present, or the actual pipe and structure conveyance system.

Conveyance to the curb will only be allowed if a catch basin is located within 350 feet downstream of the discharge point. If a catch basin is not located within 350 feet of the discharge location, a storm main extension shall be required.

Minimum pipe size for conveyance to the curb shall be 4 inches in diameter for single family homes and a minimum of 6 inches in diameter for non-single family. Where capacity greater than a 6 inch diameter pipe is required, the City shall review the proposal and may require a storm main extension.

For total roof areas 2,000 to 5,000 sf, roof runoff may be allowed to be collected and conveyed to either the curb or directly connected to a structure. The runoff shall not be conveyed over driveways, sidewalks or other areas reserved for pedestrian traffic. A detail for the discharge shall be submitted to the City for review and approval.

For roof areas between 5,001 sf and 9,999 sf, roof runoff may be allowed to be collected and conveyed to the curb or stormwater structure. Capacity analysis of the road gutter, conveyance piping and catch basin leads will be required to ensure that adequate capacity exists. The City may require more than one through curb outlet for discharge to the curb.

For roof areas 10,000 sf and greater, please refer to Minimum Requirement #7.

No flow credits will be allowed for the collect and convey option.

2.2 Infiltration Facilities for Stormwater Flow Control

2.2.1 Purpose

To provide infiltration capacity for stormwater runoff quantity and flow control. Infiltration facilities may also be used for water quality treatment when designed appropriately.

2.2.2 Description

An infiltration BMP is typically an open basin (pond), trench, or buried perforated pipe used for distributing the stormwater runoff into the underlying soil (See Figure III-2-4). (See Underground Injection Control Program, Chapter 173-218 WAC).

The City prefers retention (infiltration) for storm drainage quantity control when soil conditions are satisfactory for such application and water quality treatment can be provided.

Coarser more permeable soils can be used for quantity control provided that the stormwater discharge does not cause a violation of groundwater quality criteria. Typically, treatment for removal of TSS, oil, and/or soluble pollutants is necessary prior to conveyance to an infiltration BMP.

Use of the soil for treatment purposes is also an option as long as it is preceded by a pre-settling basin or a basic treatment BMP. This section highlights design criteria that are applicable to infiltration facilities serving a flow control function. See Volume V, Chapter 5 for design criteria for treatment.

2.2.3 Application

Infiltration facilities for flow control are used to convey stormwater runoff from new development or redevelopment to the ground and groundwater after appropriate treatment. Infiltration facilities for treatment purposes rely on the soil profile to provide treatment. In either case, runoff in excess of the infiltration capacity of the facilities must be managed to comply with the flow control requirement in Volume I, if flow control applies to the project.

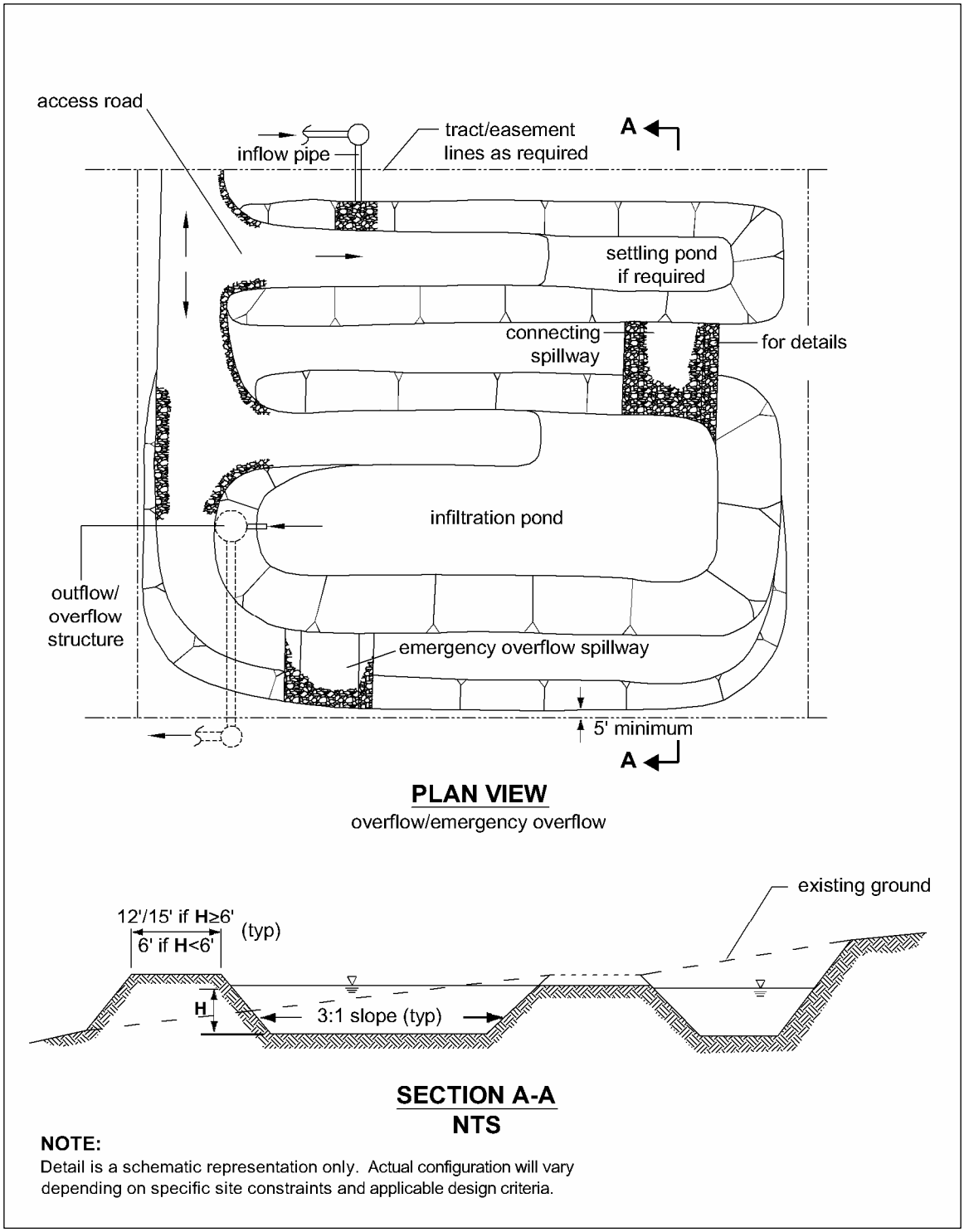

Figure III-2-4. Typical Infiltration Pond/Basin

Infiltration trenches can be considered for residential lots, commercial areas, parking lots, and open space areas. Infiltration facilities can help accomplish the following:

- Groundwater recharge
- Discharge of uncontaminated or properly treated stormwater in compliance with Ecology's UIC regulations (Chapter 173-218 WAC)
- Retrofits in limited land areas:
- Flood control
- Streambank erosion control

2.2.4 Design Methodology

Two methodologies outlining the steps for designing infiltration systems are presented in this manual. The simplified approach is outlined in Section 2.2.5 and the detailed approach is outlined in Section 2.2.6.

2.2.5 Simplified Approach

The simplified approach was derived from high groundwater and shallow pond sites in western Washington, and in general will produce `conservative' designs. The simplified approach can be used when determining the trial geometry of the infiltration facility, for small or low impact facilities, or for facilities where a more conservative design is acceptable. The simplified approach is applicable to ponds and trenches and includes the following steps:

Step 1. Select a location:

This will be based on the ability to convey flow to the location and the expected soil conditions of the location. Conduct a preliminary surface and sub-surface characterization study (Section 2.2.7). Do a preliminary check of Site Suitability Criteria (Section 2.2.10) to estimate feasibility.

Step 2. Estimate volume of stormwater, V_{design}:

Use WWHM to estimate the design. The runoff volume developed for the project site serves as input to the infiltration basin.

For infiltration basins sized simply to meet treatment requirements, the basin must successfully infiltrate 91% of the influent runoff volume. The remaining 9% of the influent volume can bypass the infiltration facility. However, if the bypass discharges to a surface water that is not exempt from flow control, the bypass must meet the flow control standard.

For infiltration basins sized to meet the flow control standard, the basin must infiltrate either all of the influent volume, or a sufficient amount of the influent volume such that any overflow/bypass meets the flow duration standard.

Step 3. Develop trial infiltration facility geometry:

To accomplish this, an infiltration rate will need to be assumed based on previously available data, or a default infiltration rate of 0.5 inches/hour can be used. This trial facility geometry should be used to help locate the facility and for planning purposes in developing the geotechnical subsurface investigation plan.

Step 4. Complete more detailed site characterization study and consider site suitability criteria:

Information gathered during initial geotechnical and surface investigations are necessary to know whether infiltration is feasible. The geotechnical investigation evaluates the suitability of the site for infiltration, establishes the infiltration rate for design, and evaluates slope stability, foundation capacity, and other geotechnical design information needed to design and assess constructability of the facility.

See Sections 2.2.7 and 2.2.10.

Step 5. Determine the infiltration rate as follows:

Three possible methods for estimating the long-term infiltration rate are provided in Section 2.2.9.

Step 6. Size the facility:

Ensure that the maximum pond depth stays below the minimum required freeboard. If sizing a treatment facility, document that the 91st percentile, 24-hour runoff volume (indicated by an approved continuous simulation model) can infiltrate through the infiltration basin surface within 48 hours. This can be calculated by multiplying a horizontal projection of the infiltration basin mid-depth dimensions by the estimated long-term infiltration rate; and multiplying the result by 48 hours.

Step 7. Construct the facility:

Maintain and monitor the facility for performance.

2.2.6 Detailed Approach

This detailed approach was obtained from Massmann (2003). Procedures for the detailed approach are as follows:

Step 1: Select a location:

This will be based on the ability to convey flow to the location and the expected soil conditions. The minimum setback distances must also be met. See Section 2.2.10 Site Suitability Criteria and setback distances.

Step 2: Estimate volume of stormwater, V_{design}:

Use WWHM to estimate V_{design}.

Step 3: Develop a trial infiltration facility geometry based on length, width, and depth:

To accomplish this, either assume an infiltration rate based on previously available data, or use a default infiltration rate of 0.5 inches/hour. This trial geometry should be used to help locate the facility, and for planning purposes in developing the geotechnical subsurface investigation plan.

Step 4: Conduct a geotechnical investigation and consider site suitability criteria:

See Sections 2.2.7 and 2.2.10.

Step 5: Determine the saturated hydraulic conductivity as follows:

For each defined layer below the pond to a depth below the pond bottom of 2.5 times the maximum depth of water in the pond, but not less than 6 feet, estimate the saturated hydraulic conductivity in cm/sec using the following relationship (see Massmann 2003, and Massmann et al., 2003)

$$\log_{10}(K_{sat}) = -1.57 + 1.90D_{10} + 0.015D_{60} - 0.013D_{90} - 2.08F_{\text{fines}} \qquad \text{(equation 1)}$$

Where, D_{10}, D_{60} and D_{90} are the grain sizes in mm for which 10 percent, 60 percent and 90 percent of the sample is more fine and f_{fines} is the fraction of the soil (by weight) that passes the #200 sieve (K_{sat} is in cm/s).

If the licensed professional conducting the investigation determines that deeper layers will influence the rate of infiltration for the facility, soil layers at greater depths must be considered when assessing the site's hydraulic conductivity characteristics. Massmann (2003) indicates that where the water table is deep, soil or rock strata up to 100 feet below an infiltration facility can influence the rate of infiltration. Note that only the layers near and above the water table or low permeability zone (e.g., a clay, dense glacial till, or rock layer) need to be considered, as the layers below the groundwater table or low permeability zone do not significantly influence the rate of infiltration. Also note that this equation for estimating hydraulic conductivity assumes minimal compaction consistent with the use of tracked (i.e., low to moderate ground pressure) excavation equipment. If the soil layer being characterized has been exposed to heavy compaction, or is heavily consolidated due to its geologic history (e.g., overridden by continental glaciers), the hydraulic conductivity for the layer could be approximately an order of magnitude less than what would be estimated based on grain size characteristics alone (Pitt, 2003). In such cases, compaction effects must be taken into account when estimating hydraulic conductivity. For clean, uniformly graded sands and gravels, the reduction in K_{sat} due to compaction will be much less than an order of magnitude. For well-graded sands and gravels with moderate to high silt content, the reduction in K_{sat} will be close to an order of magnitude. For soils that contain clay, the reduction in K_{sat} could be greater than an order of magnitude.

For critical designs, the in-situ saturated conductivity of a specific layer can be obtained through field tests such as the packer permeability test (above or below the water table), the piezocone (below the water table), an air conductivity test (above the water table), or through the use of a pilot infiltration test (PIT) as described in Volume III, Appendix B. Note that these field tests generally provide a hydraulic conductivity combined with a hydraulic gradient (i.e., Equation 5). In some of these tests, the hydraulic gradient may be close to 1.0; therefore, in effect, the magnitude of the test result is the same as the hydraulic conductivity. In other cases, the hydraulic gradient may be close to the gradient that is likely to occur in the full-scale infiltration facility. This issue will need to be evaluated

on a case-by-case basis when interpreting the results of field tests. It is important to recognize that the gradient in the test may not be the same as the gradient likely to occur in the full-scale infiltration facility in the long-term (i.e., when groundwater mounding is fully developed).

Once the saturated hydraulic conductivity for each layer has been identified, determine the effective average saturated hydraulic conductivity below the pond. Hydraulic conductivity estimates from different layers can be combined using the harmonic mean:

$$K_{equiv} = \frac{d}{\sum \frac{d_i}{K_i}} \qquad \text{(equation 2)}$$

Where, d is the total depth of the soil column, d_i is the thickness of layer "i" in the soil column, and K_i is the saturated hydraulic conductivity of layer "i" in the soil column. The depth of the soil column, d, typically would include all layers between the pond bottom and the water table. However, for sites with very deep water tables (>100 feet) where groundwater mounding to the base of the pond is not likely to occur, it is recommended that the total depth of the soil column in Equation 2 be limited to approximately 20 times the depth of pond. This is to ensure that the most important and relevant layers are included in the hydraulic conductivity calculations. Deep layers that are not likely to affect the infiltration rate near the pond bottom should not be included in Equation 2. Equation 2 may over-estimate the effective hydraulic conductivity value at sites with low conductivity layers immediately beneath the infiltration pond. For sites where the lowest conductivity layer is within five feet of the base of the pond, it is suggested that this lowest hydraulic conductivity value be used as the equivalent hydraulic conductivity rather than the value from Equation 2. The harmonic mean given by Equation 2 is the appropriate effective hydraulic conductivity for flow that is perpendicular to stratigraphic layers, and will produce conservative results when flow has a significant horizontal component such as could occur due to groundwater mounding.

Step 6: Calculate the hydraulic gradient as follows:

The steady state hydraulic gradient is calculated as follows:

$$\text{gradient} = \text{i} \approx \frac{D_{wt} + D_{pond}}{138.62(K^{0.1})} CF_{size} \qquad \text{(equation 3)}$$

Where, D_{wt} is the depth from the base of the infiltration facility to the water table in feet, K is the saturated hydraulic conductivity in feet/day, D_{pond} is the depth of water in the facility in feet (see Massmann et al., 2003, for the development of this equation), and CF_{size}, is the correction for pond size. The correction factor was developed for ponds with bottom areas between 0.6 and 6 acres in size. For small ponds (ponds with area equal to 2/3 acre), the correction factor is equal to 1.0. For large ponds (ponds with area equal to 6 acres), the correction factor is 0.2, as shown in Equation 4.

$$CF_{size} = 0.73(A_{pond})^{-0.76} \qquad \text{(equation 4)}$$

Where, A_{pond} is the area of pond bottom in acres. This equation generally will result in a calculated gradient of less than 1.0 for moderate to shallow groundwater depths (or to a low permeability layer) below the facility, and conservatively accounts for the development of a groundwater mound. A more detailed groundwater mounding analysis using a program such as MODFLOW will usually result in a gradient that is equal to or greater than the gradient calculated using Equation 3. If the calculated gradient is greater than 1.0, the water table is considered to be deep, and a maximum gradient of 1.0 must be used. Typically, a depth to groundwater of 100 feet or more is required to obtain a gradient of 1.0 or more using this equation. Since the gradient is a function of depth of water in the facility, the gradient will vary as the pond fills during the season. The gradient could be calculated as part of the stage-discharge calculation used in the continuous runoff models. As of the date of this update, neither the WWHM or MGSFlood have that capability. However, updates to those models may soon incorporate the capability. Until that time, use a steady-state hydraulic gradient that corresponds with a ponded depth of ¼ of the maximum ponded depth – as measured from the basin floor to the overflow.

Step 7: Calculate the infiltration rate using Darcy's law as follows:

$$f = K\left(\frac{dh}{dz}\right) = Ki \qquad \text{(equation 5)}$$

Where, f is the specific discharge or infiltration rate of water through a unit cross-section of the infiltration facility (L/t), K is the hydraulic conductivity (L/t), dh/dz is the hydraulic gradient (L/L), and "i" is the gradient.

Step 8: Adjust infiltration rate or infiltration stage-discharge relationship obtained in Steps 6 and 7:

This is done to account for reductions in the rate resulting from long-term siltation and biofouling, taking into consideration the degree of long-term maintenance and performance monitoring anticipated, the degree of influent control (e.g., pre-settling ponds biofiltration swales, etc.), and the potential for siltation, litterfall, moss buildup, etc. based on the surrounding environment. It should be assumed that an average to high degree of maintenance will be performed on these facilities. A low degree of maintenance should be considered only when there is no other option (e.g., access problems). The infiltration rate estimated in Step 8 and 9 is multiplied by the reduction factors summarized in Table III-2-6.

Table III-2-6. Infiltration Rate Reduction Factors to Account for Biofouling and Siltation Effects for Ponds

Potential for Biofouling	Degree of Long-Term Maintenance/Performance Monitoring	Infiltration Rate Reduction Factor ($CF_{silt/bio}$)
Low	Average to High	0.9
Low	Low	0.6
High	Average to High	0.5
High	Low	0.2

(Massman, 2003)

The values in this table assume that final excavation of the facility to the finished grade is deferred until all disturbed areas in the upgradient drainage area have been stabilized or protected (e.g., construction runoff is not allowed into the facility after final excavation of the facility). Ponds located in shady areas where moss and litterfall from adjacent vegetation can build up on the pond bottom and sides, the upgradient drainage area will remain in a disturbed condition long-term, and no pretreatment (e.g., pre-settling ponds, biofiltration swales, etc.) is provided, are one example of a situation with a high potential for biofouling. A low degree of long-term maintenance includes, for example, situations where access to the facility for maintenance is very difficult or limited, or where there is minimal control of the party responsible for enforcing the required maintenance. A low degree of maintenance should be considered only when there is no other option.

Also adjust this infiltration rate for the effect of pond aspect ratio by multiplying the infiltration rate determined in Step 7 (Equation 5) by the aspect ratio correction factor Faspect as shown in the following equation:

$$CF_{aspect} = 0.02A_r + 0.98 \qquad \text{(equation 6)}$$

Where, Ar is the aspect ratio for the pond (length/width). In no case shall CFaspect be greater than 1.4.

The final infiltration rate will therefore be as follows:

$$f = Ki \times CF_{aspect} \times CF_{silt/bio} \qquad \text{(equation 7)}$$

The rates calculated based on Equations 5 and 7 are long-term design rates. No additional reduction factor or factor of safety is needed.

Step 9: Size the facility:

Size the facility to ensure that the desirable pond depth is three feet, with one-foot minimum required freeboard. The maximum allowable pond depth is six feet.

Where the infiltration facility is being used to meet treatment requirements, check that the 91st percentile, 24-hour runoff volume (indicated by WWHM or MGS Flood) can infiltrate through the infiltration basin surface within 48 hours. This can be calculated by multiplying a horizontal projection of the infiltration basin mid-depth dimensions by the estimated long-term infiltration rate; and multiplying the result by 48 hours. Finally, check to make sure that the basin can drain its maximum ponded water depth within 24 hours.

Step 10: Construct the facility:

Maintain and monitor the facility for performance in accordance with Section 2.2.11.

2.2.7 Site Characterization Criteria

One of the first steps in siting and designing infiltration facilities is to conduct a characterization study. Information gathered during initial geotechnical investigations can be used for the site characterization.

2.2.7.1 Surface Features Characterization

- Topography within 500 feet of the proposed facility.
- Anticipated site use (street/highway, residential, commercial, high-use site).
- Location of water supply wells within 500 feet of proposed facility.
- Location of groundwater protection areas and/or 1, 5 and 10 year time of travel zones for municipal well protection areas.
- A description of local site geology, including soil or rock units likely to be encountered, the groundwater regime, and geologic history of the site.

2.2.7.2 Subsurface Characterization

- Conduct pit/hole explorations during the wet season (December 1st through April 30th) to provide accurate groundwater saturation and groundwater information.
- Subsurface explorations (test holes or test pits) to a depth below the base of the infiltration facility of at least 5 times the maximum design depth of ponded water proposed for the infiltration facility,
- Continuous sampling (representative samples from each soil type and/or unit within the infiltration receptor) to a depth below the base of the infiltration facility of 2.5 times the maximum design ponded water depth, but not less than 6 feet.
- For basins, at least one test pit or test hole per 5,000 ft^2 of basin infiltrating surface (in no case less than two per basin).
- For trenches, at least one test pit or test hole per 50 feet of trench length (in no case less than two per trench).

The depth and number of test holes or test pits, and samples should be increased, if in the judgment of a licensed engineer with geotechnical expertise (P.E.), a licensed geologist, engineering geologist, hydrogeologist, or other licensed professional acceptable to the City, the conditions are highly variable and such increases are necessary to accurately estimate the performance of the infiltration system. The exploration program may also be decreased if, in the opinion of the licensed engineer or other professional, the conditions are relatively uniform and the borings/test pits omitted will not influence the design or successful operation of the facility. In high water table sites, the subsurface exploration sampling need not be conducted lower than two (2) feet below the groundwater table.

Prepare detailed logs for each test pit or test hole and a map showing the location of the test pits or test holes. Logs must include at a minimum, depth of pit or hole, soil descriptions, depth to water, presence of stratification (Logs must substantiate whether stratification does or does not exist. The licensed professional may consider additional methods of analysis to substantiate the presence of stratification that will significantly impact the design of the infiltration facility).

2.2.7.3 Infiltration Rate Determination

Determine the representative infiltration rate of the unsaturated vadose zone based on infiltration tests and/or grain-size distribution/texture (see next section). Determine site infiltration rates using the Pilot Infiltration Test (PIT) described in Volume III, Appendix B, if practicable. Such site testing should be considered to verify infiltration rate estimates based on soil size distribution and textural analysis. Infiltration rates may also be estimated based on soil grain-size distributions from test pits or test hole

samples (particularly where a sufficient source of water does not exist to conduct a pilot infiltration test). As a minimum, one soil grain-size analysis per soil stratum in each test hole shall be performed within 2.5 times the maximum design water depth, but not less than 6 feet.

2.2.7.4 Soil Testing

Soil characterization for each soil unit (soils of the same texture, color, density, compaction, consolidation and permeability) encountered should include:

- Grain-size distribution (ASTM D422 or equivalent AASHTO specification)
- Textural class (USDA) (See Figure III-2-5).
- Percent clay content (include type of clay, if known)
- Color/mottling
- Variations and nature of stratification

If the infiltration facility will be used to provide treatment as well as flow control, the soil characterization should also include cation exchange capacity (CEC) and organic matter content for each soil type and strata. Where distinct changes in soil properties occur, perform analysis to a depth below the base of the facility of at least 2.5 times the maximum design water depth, but not less than 6 feet. Consider if soils are already contaminated, thus diminishing pollutant sorptive capacity.

For soils with low CEC and organic content, deeper characterization of soils may be warranted (refer to Section 2.2.10 Site Suitability Criteria)

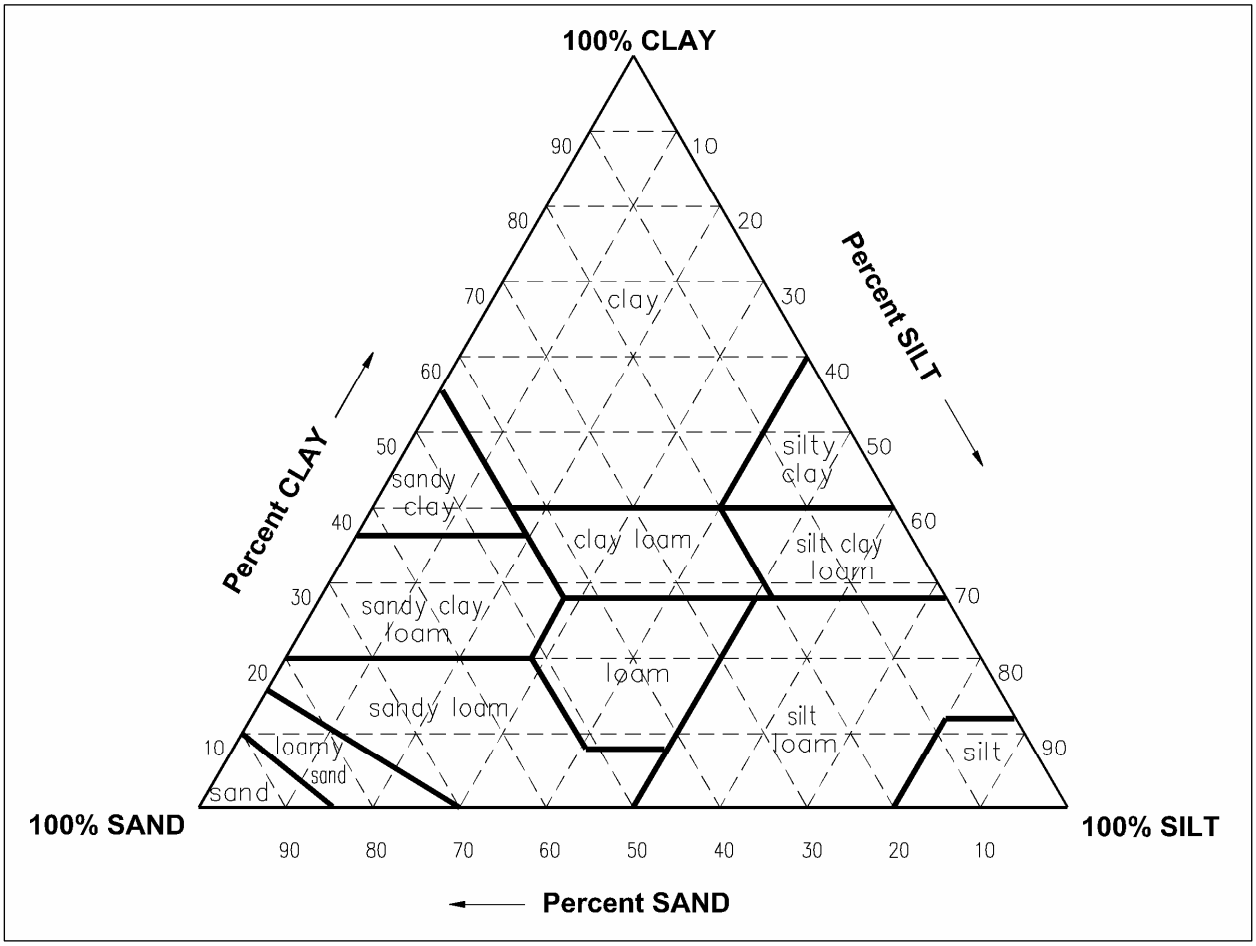

Figure III-2-5. USDA Textural Triangle[2]

2.2.7.5 Infiltration Receptor

The requirements of this section will be applied as directed by the City. Infiltration receptor (unsaturated and saturated soil receiving the stormwater) characterization should include:

- Installation of groundwater monitoring wells (at least three per infiltration facility, or three hydraulically connected surface and groundwater features that will establish a three-dimensional relationship for the groundwater table, unless the highest groundwater level is known to be at least 50 feet below the proposed infiltration facility) to:
  - Monitor the seasonal groundwater levels at the site during at least one wet season, and,

[2] Shaded area is applicable for design of infiltration BMPs. Source, U.S. Department of Agriculture

  - Consider the potential for both unconfined and confined aquifers, or confining units, at the site that may influence the proposed infiltration facility as well as the groundwater gradient. Other approaches to determine groundwater levels at the proposed site could be considered if pre-approved by the City, and
  - Determine the ambient groundwater quality, if that is a concern.
- An estimate of the volumetric water holding capacity of the infiltration receptor soil. This is the soil layer below the infiltration facility and above the seasonal high-water mark, bedrock, hardpan, or other low permeability layer. This analysis should be conducted at a conservatively high infiltration rate based on vadose zone porosity, and the water quality runoff volume to be infiltrated. This, along with an analysis of groundwater movement, will be useful in determining if there are volumetric limitations that would adversely affect drawdown.
- Determination of:
  - Depth to groundwater table and to bedrock/impermeable layers
  - Seasonal variation of groundwater table based on well water levels and observed mottling
  - Existing groundwater flow direction and gradient
  - Lateral extent of infiltration receptor
  - Horizontal hydraulic conductivity of the saturated zone to assess the aquifer's ability to laterally transport the infiltrated water.
- Impact of the infiltration rate and volume at the project site on groundwater mounding, flow direction, and water table; and the discharge point or area of the infiltrating water. A groundwater mounding analysis should be conducted at all sites where the depth to seasonal groundwater table or low permeability stratum is less than 15 feet and the runoff to the infiltration facility is from more than one acre. (The site professional may consider conducting an aquifer test, or slug test to aid in determining the type of groundwater mounding analysis necessary at the site)

  A detailed soils and hydrogeologic investigation should be conducted if potential pollutant impacts to groundwater are a concern, or if the applicant is proposing to infiltrate in areas underlain by till or other impermeable layers. (Suggested references: "Implementation Guidance for the Groundwater Quality Standards", Department of Ecology, publication 96-2, 2005).

2.2.8 Design Infiltration Rate Determination – Guidelines and Criteria

Infiltration rates can be determined using either a correlation to grain size distribution from soil samples, textural analysis, or by in-situ field measurements. Short-term infiltration rates up to 2.4 in/hr represent soils that typically have sufficient treatment properties. Long-term infiltration rates are used for sizing the infiltration pond based on maximum pond level and drawdown time. Long-term infiltration rates up to 2.0 inches per hour can also be considered for treatment if SSC-4 and SSC-6 are met, as defined in Section 2.2.10.

Historically, infiltration rates have been estimated from soil grain size distribution (gradation) data using the United States Department of Agriculture (USDA) textural analysis approach. To use the USDA textural analysis approach, the grain size distribution test must be conducted in accordance with the USDA test procedure (SOIL SURVEY MANUAL, U.S. Department of Agriculture, October 1993, page 136). This manual only considers soil passing the #10 sieve (2 mm) (U.S. Standard) to determine percentages of sand, silt, and clay for use in Figure III-2-5 (USDA Textural Triangle). However, many soil test laboratories use the ASTM soil size distribution test procedure (ASTM D422), which considers the full range of soil particle sizes, to develop soil size distribution curves. The ASTM soil gradation procedure must not be used with Figure III-2-5 to perform USDA soil textural analyses.

2.2.9 Three Methods for Determining Long-term Infiltration Rates for Sizing Infiltration Facilities

For designing the infiltration facility the site professional must select one of the three methods described below that will best represent the long-term infiltration rate at the site. The long-term infiltration rate should be used for routing and sizing the basin/trench for the maximum drawdown time of 48 hours. If the pilot infiltration test (Table III-2-9) or ASTM gradation approach (Table III-2-8) is selected corroboration with a textural based infiltration rate (Table III-2-7) is also desirable. Appropriate correction factors must be applied as specified. Verification testing of the completed facility is strongly encouraged and may be required by the City. (See Section 2.2.10.8 - Verification Testing)

1. USDA Soil Textural Classification

Table III-2-7 provides the correlation between USDA soil texture and infiltration rates for estimating infiltration rates for homogeneous soils based on gradations from soil samples and textural analysis. The USDA soil texture – infiltration rate correlation in Table III-2-7 is based on the correlation developed by Rawls, et al (1982), but with minor changes in the infiltration rates based on WEF/ASCE (1998). The infiltration rates provided through this correlation represent short-term conservative rates for homogeneous soils. These rates do not account for the effects of site variability, long-term clogging due to siltation and biomass buildup in the infiltration facility, or other processes that can decrease infiltration rates. Correction factors must be applied to these rates.

Table III-2-7. Recommended Infiltration Rates based on USDA Soil Textural Classification

	Short-Term Infiltration Rate (in/hr)[1]	**Correction Factor (CF)**	**Estimated Long-Term (Design) Infiltration Rate (in/hr)**
Clean, sandy gravels and gravelly sands (i.e., 90% of the total soil sample is retained in the #10 sieve)	20	2	10[2]
Sand	8	4	2[3]
Loamy sand	2	4	0.5
Sandy loam	1	4	0.25
Loam	0.5	4	0.13

[1] From WEF/ASCE, 1998
[2] Not recommended for treatment
[3] Refer to SSC-4 and SSC-6 for treatment acceptability criteria

Based on experience with long-term full-scale infiltration pond performance, Ecology's Technical Advisory Committee (TAC) recommends that the short-term infiltration rates be reduced as shown in Table III-2-7, dividing by a correction factor of 2 to 4, depending on the soil textural classification. The correction factors provided in Table III-2-7 represent an average degree of long-term facility maintenance, TSS reduction through pretreatment, and site variability in the subsurface conditions. These conditions might include deposits of ancient landslide debris, buried stream channels, lateral grain size variability, and other factors that affect homogeneity).

These correction factors could be reduced, subject to the approval of the local jurisdiction, under the following conditions:

For sites with little soil variability,

- Where there will be a high degree of long-term facility maintenance,
- Where specific, reliable pretreatment is employed to reduce TSS entering the infiltration facility

In no case shall a correction factor less than 2.0 be used.

Correction factors higher than those provided in Table III-2-7 should be considered for situations where long-term maintenance will be difficult to implement, where little or no pretreatment is anticipated, or where site conditions are highly variable or uncertain. These situations require the use of best professional judgment by the site engineer and the approval of the local jurisdiction. An Operation and Maintenance plan and a financial bonding plan may be required by the local jurisdiction.

2. ASTM Gradation Testing at Full Scale Infiltration Facilities

As an alternative to Table III-2-7, recent studies by Massmann and Butchart (2000) were used to develop the correlation provided in Table III-2-8. These studies compare infiltration measurements from full-scale infiltration facilities to soil gradation data developed using the ASTM procedure (ASTM D422). The primary source of the data used by Massmann and Butchart was from Wiltsie (1998), who included limited infiltration studies only on Thurston County sites. However, Massmann and Butchart also included limited data from King and Clark County sites in their analysis. This table provides recommended long-term infiltration rates that have been correlated to soil gradation parameters using the ASTM soil gradation procedure.

Table III-2-8 can be used to estimate long-term design infiltration rates directly from soil gradation data. The City may require additional correction factors be applied to the values shown in Table III-2-8 depending on the site conditions. As is true of Table III-2-7, the long-term rates provided in Table III-2-8 represent average conditions regarding site variability, the degree of long-term maintenance and pretreatment for TSS control, and represent a moderate depth to groundwater below the pond. The long-term infiltration rates in Table III-2-8 may need to be decreased if the site is highly variable, the groundwater table is shallow, there is fine layering present that would not be captured by the soil gradation testing, or if maintenance and influent characteristics are not well controlled. The data that forms the basis for Table III-2-8 was from soils that would be classified as sands or sandy gravels. No data was available for finer soils at the time the table was developed. Therefore, Table III-2-8 should not be used for soils with a D_{10} size (10% passing the size listed) less than 0.05 mm (U.S. Standard Sieve).

Table III-2-8. Alternative Recommended Infiltration Rates Based on ASTM Gradation Testing

D_{10} Size from ASTM D422 Soil Gradation Test (mm)	Estimated Long-Term (Design) Infiltration Rate (in/hr)
> 0.4	9[1]
0.3	6.5[1]
0.2	3.5[1]
0.1	2.0[2]
0.05	0.8

[1] Not recommended for treatment
[2] Refer to SSC-4 and SSC-6 for treatment acceptability criteria

The infiltration rates provided in Table III-2-7 and Table III-2-8 represent rates for homogeneous soil conditions. If more than one soil unit is encountered within 6 feet of the base of the facility or 2.5 times the proposed maximum water design depth, use the lowest infiltration rate determined from each of the soil units as the representative site infiltration rate.

If soil mottling, fine silt or clay layers, which cannot be fully represented in the soil gradation tests, are present below the bottom of the infiltration pond, the infiltration rates provided in the tables will be too high and should be reduced. Based on limited full-scale infiltration data (Massmann and Butchart, 2000; Wiltsie, 1998), it appears that the presence of mottling indicates soil conditions that reduce the infiltration rate for homogeneous conditions by a factor of 3 to 4.

3. In-situ Infiltration Measurements

Where feasible, Ecology encourages in-situ infiltration measurements, using a procedure such as the Pilot Infiltration Test (PIT) described in Volume III, Appendix B. Small-scale infiltration tests such as the EPA Falling Head or double ring infiltrometer test (ASTM D3385-88) are not recommended unless modified versions are approved in writing by The City. These small-scale infiltration tests tend to seriously overestimate infiltration rates and, based on recent Ecology experience, are considered unreliable.

The infiltration rate obtained from the PIT test shall be considered to be a short-term rate. This short-term rate must be reduced through correction factors to account for site variability and number of tests conducted, degree of long-term maintenance and influent pretreatment/control, and potential for long-term clogging due to siltation and bio-buildup.

The typical range of correction factors to account for these issues, based on Ecology experience, is summarized in Table III-2-9. The range of correction factors is for general guidance only. The specific correction factors used shall be determined based on the professional judgment of the licensed engineer or other soils professional considering all issues which may affect the long-term infiltration rate, subject to the approval of The City.

Table III-2-9. Correction Factors to be Used with In-Situ Infiltration Measurements to Estimate Long-Term Design Infiltration Rates

Issue	Partial Correction Factor
Site variability and number of locations tested	CF_y = 1.5 to 6
Degree of long-term maintenance to prevent siltation and bio-buildup	CF_m = 2 to 6
Degree of influent control to prevent siltation and bio-buildup	CF_i = 2 to 6

Total Correction Factor (CF) = $CF_y + CF_m + CF_i$

The following discussions are to provide assistance in determining the partial correction factors to apply in Table III-2-9.

Site variability and number of locations tested – The number of locations tested must be capable of producing a picture of the subsurface conditions that fully represents the conditions throughout the facility site. The partial correction factor used to compensate for site variability depends on the level of uncertainty that adverse subsurface conditions may occur. If the range of uncertainty is low - for example, conditions are known to be uniform through previous exploration and site geological factors - one pilot infiltration test may be adequate to justify a partial correction factor at the low end of the range. If the level of uncertainty is high, a partial correction factor near the high end of the range may

be appropriate. This might be the case where the site conditions are highly variable due to a deposit of ancient landslide debris, or buried stream channels. In these cases, even with many explorations and several pilot infiltration tests, the level of uncertainty may still be high. A partial correction factor near the high end of the range could be assigned where conditions have a more typical variability, but few explorations and only one pilot infiltration test is conducted. That is, the number of explorations and tests conducted do not match the degree of site variability anticipated.

Degree of long-term maintenance to prevent siltation and bio-buildup – The standard of comparison here is the long-term maintenance requirements provided in Volume I, Appendix D, and any additional requirements by local jurisdictional authorities. Full compliance with these requirements would be justification to use a partial correction factor at the low end of the range. If there is a high degree of uncertainty that long-term maintenance will be carried out consistently, or if the maintenance plan is poorly defined, a partial correction factor near the high end of the range may be justified.

Degree of influent control to prevent siltation and bio-buildup – A partial correction factor near the high end of the range may be justified under the following circumstances:

- If the infiltration facility is located in a shady area where moss buildup or litter fall buildup from the surrounding vegetation is likely and cannot be easily controlled through long-term maintenance
- If there is minimal pre-treatment, and the influent is likely to contain moderately high TSS levels.
- If influent into the facility can be well controlled such that the planned long-term maintenance can easily control siltation and biomass buildup, then a partial correction factor near the low end of the range may be justified.

The determination of long-term design infiltration rates from in-situ infiltration test data involves a considerable amount of engineering judgment. Therefore, when reviewing or determining the final long-term design infiltration rate the results of both textural analyses and in-situ infiltration tests results will be considered when available and may be required by the City.

2.2.10 Site Suitability Criteria (SSC)

This section provides criteria that must be considered for siting infiltration systems. When a site investigation reveals that any of the applicable criteria cannot be met appropriate mitigation measures must be implemented so that the infiltration facility will not pose a threat to safety, health, and the environment.

For site selection and design decisions a geotechnical and hydrogeologic report should be prepared by a qualified engineer with geotechnical and hydrogeologic experience, or a licensed geologist, hydrogeologist, or engineering geologist. The design engineer may utilize a team of certified or registered professionals in soil science, hydrogeology, geology, and other related fields.

2.2.10.1 SSC-1 Setback Criteria

Setback requirements contained within this manual and other applicable setbacks include those contained within the uniform building code requirements, City of Auburn Zoning and Building Codes, County Health District requirements, Washington State Department of Health On-Site Sewage Systems Chapter 246-272A WAC, and other state regulations.

These additional setback requirements may be required as determined by the project engineer and/or the City.

- Drinking water wells, septic tanks or drainfields, and springs used for public drinking water supplies (DOH, Publication # 333-117, Chapter 246-272A WAC).
- Infiltration facilities upgradient of drinking water supplies and within 1, 5, and 10-year time of travel zones must comply with Health Dept. requirements (Washington Wellhead Protection Program, DOH, Publication #331-018).
- Additional setbacks must be considered if roadway deicers or herbicides are likely to be present in the influent to the infiltration system.
- Building foundations within 20 feet downslope and within100 feet upslope
- Native Growth Protection Easement (NGPE) within 20 feet
- From the top of slopes >20% and within 50 feet.
- Evaluate on-site and off-site structural stability due to extended subgrade saturation and/or head loading of the permeable layer, including the potential impacts to downgradient properties, especially on hills with known side-hill seeps.

2.2.10.2 SSC-2 Groundwater Protection Areas

A site is not suitable if the infiltration facility will cause a violation of Ecology's Groundwater Quality Standards (See SSC-9 for verification testing guidance).

2.2.10.3 SSC-3 High Vehicle Traffic Areas

An infiltration BMP may be considered for runoff from areas of industrial activity and the high vehicle traffic areas described below. For such applications sufficient pollutant removal (including oil removal) must be provided upstream of the infiltration facility to ensure that groundwater quality standards will not be violated and that the infiltration facility is not adversely affected.

High Vehicle Traffic Areas are:

- Commercial or industrial sites subject to an expected average daily traffic count (ADT) ≥100 vehicles/1,000 ft² gross building area (trip generation), and
- Road intersections with an ADT of ≥ 25,000 on the main roadway, or ≥ 15,000 on any intersecting roadway.

2.2.10.4 SSC-4 Drawdown Time

Infiltration facilities designed for flow control do not have a required drawdown time criteria.

2.2.10.5 SSC-5 Depth to Bedrock, Water Table, or Impermeable Layer

The base of all infiltration basins or trench systems shall be ≥ 5 feet above the seasonal high-water mark, bedrock (or hardpan) or other low permeability layer. A separation down to 3 feet may be considered if the groundwater mounding analysis, volumetric receptor capacity, and the design of the overflow and/or bypass structures are judged by the site professional and the City to be adequate to prevent overtopping and meet the site suitability criteria specified in this section.

2.2.10.6 SSC-6 Seepage Analysis and Control

Determine whether there would be any adverse effects caused by seepage zones on nearby building foundations, basements, roads, parking lots or sloping sites.

2.2.10.7 SSC-7 Cold Climate and Impact of Roadway Deicers

For cold climate design criteria (snowmelt/ice impacts) refer to D. Caraco and R. Claytor Design Supplement for Stormwater BMPs in Cold Climates, Center for Watershed Protection, 1997.

Potential impact of roadway deicers on potable water wells must be considered in the siting determination. Mitigation measures must be implemented if infiltration of roadway deicers can cause a violation of groundwater quality standards.

2.2.10.8 SSC-8 Verification Testing of the Completed Facility

Verification testing of the completed full-scale infiltration facility is recommended to confirm that the design infiltration parameters are adequate. The site professional should determine the duration and frequency of the verification testing program including the monitoring program for the potentially impacted groundwater. The groundwater monitoring wells installed during site characterization (See Section 2.2.7) may be used for this purpose. Long-term (more than two years) in-situ drawdown and confirmatory monitoring of the infiltration facility would be preferable (See King County reference). The City may require verification testing on a site-by-site basis.

2.2.11 Design Criteria for Infiltration Facilities

The design criteria for infiltration facilities shall be the same as for detention ponds described in Section 2.3.1.2 as applicable. All retention ponds shall be appropriately and aesthetically located, designed and planted. Pre-approval of the design concept, including landscaping, is required by the City for all proposed public ponds. The size of the infiltration facility can be determined by routing the influent runoff file generated by the continuous runoff model through it. The primary mode of discharge from an infiltration facility is infiltration into the ground. However, when the infiltration capacity of the facility is reached, additional runoff to the facility will cause the facility to overflow. Overflows from an infiltration facility must comply with the Minimum Requirement #7 for flow control in Volume I. Infiltration facilities used for runoff treatment must not overflow more than 9% of the influent runoff volume.

In order to determine compliance with the flow control requirements, the Western Washington Hydrology Model (WWHM) must be used.

(A) For 100% infiltration

Ensure that the pond infiltrates 100% using the pond bottom area only.

(B) For 91% infiltration (water quality treatment volume)

Ensure that the pond infiltrates 91% using the pond bottom area only.

Infiltration facilities for treatment can be located upstream or downstream of detention and can be off-line or on-line.

- ***On-line*** treatment facilities placed ***upstream or downstream*** of a detention facility must be sized to infiltrate 91% of the runoff volume directed to it.
- ***Off-line*** treatment facilities placed ***upstream*** of a detention facility must have a flow splitter designed to send all flows at or below the 15-minute water quality flow rate, as predicted by WWHM to the treatment facility. The treatment facility must be sized to infiltrate all the runoff sent to it (no overflows from the treatment facility are allowed).
- ***Off-line*** treatment facilities placed ***downstream*** of a detention facility must have a flow splitter designed to send all flows at or below the 2-year flow frequency from the detention pond, as predicted by WWHM to the treatment facility. The treatment facility must be sized to infiltrate all the runoff sent to it (no overflows from the treatment facility are allowed).

  See Volume V, Section 3.5.1 for flow splitter design details.

(C) To meet flow duration standard with infiltration ponds

This design will allow something less than 100% infiltration as long as any overflows will meet the flow duration standard. You would need a discharge structure with orifices and risers similar to a detention facility except that, in addition, you also have infiltration occurring from the pond.

Slope of the base of the infiltration facility must be <3 percent.

Spillways/overflow structures – A non-erodible outlet or spillway with a firmly established elevation must be constructed to discharge overflow. Ponding depth, drawdown time, and storage volume are calculated from that reference point.

For infiltration treatment facilities, side-wall seepage is not a concern if seepage occurs through the same stratum as the bottom of the facility. However, for engineered soils or for soils with very low permeability, the potential to bypass the treatment soil through the side-walls may be significant. In those cases, the side-walls must be lined, either with an impervious liner or with at least 18 inches of treatment soil, to prevent seepage of untreated flows through the side walls.

2.2.12 Construction Criteria

Initial basin excavation should be conducted to within 1-foot of the final elevation of the basin floor. Excavate infiltration trenches and basins to final grade only after all disturbed areas in the upgradient

project drainage area have been permanently stabilized. The final phase of excavation should remove all accumulation of silt in the infiltration facility before putting it in service. After construction is completed, prevent sediment from entering the infiltration facility by first conveying the runoff water through an appropriate pretreatment system such as a pre-settling basin, wet pond, or sand filter.

Infiltration facilities should generally not be used as temporary sediment traps during construction. If an infiltration facility is to be used as a sediment trap, it must not be excavated to final grade until after the upgradient drainage area has been stabilized. Any accumulation of silt in the basin must be removed before putting it in service.

Traffic Control – Relatively light-tracked equipment is recommended for this operation to avoid compaction of the basin floor. The use of draglines and trackhoes should be considered for constructing infiltration basins. The infiltration area should be flagged or marked to keep heavy equipment away.

2.2.13 Maintenance Criteria

Provisions must be made for regular and perpetual maintenance of the infiltration basin/trench, including replacement and/or reconstruction of the any media that are relied upon for treatment purposes. Maintain when water remains in the basin or trench for more than 24 hours after the end of a rainfall event, or when overflows occur more frequently than planned. Off-line infiltration facilities should not overflow. Infiltration facilities designed to completely infiltrate all flows to meet flow control standards should not overflow. An Operation and Maintenance Plan, approved by the local jurisdiction, must ensure that the desired infiltration rate is maintained.

Adequate access for operation and maintenance must be included in the design of infiltration basins and trenches.

Removal of accumulated debris/sediment in the basin/trench should be conducted every 6 months or as needed to prevent clogging, or when water remains in the pond for greater than 24 hours after the end of a rainfall event.

For more detailed information on maintenance, see Volume I, Appendix D – Maintenance Standards for Drainage Facilities.

2.2.14 Verification of Performance

During the first 1-2 years of operation, verification testing (specified in SSC-9) is strongly recommended, along with a maintenance program that results in achieving expected performance levels. Operating and maintaining groundwater monitoring wells (specified in Section 2.2.10 - Site Suitability Criteria) is also strongly encouraged.

2.2.15 Infiltration Basins

This section covers design and maintenance criteria specific for infiltration basins. See schematic in Figure III-2-4.

Description

Infiltration basins are earthen impoundments used for the collection, temporary storage and infiltration of incoming stormwater runoff.

Design Criteria Specific for Basins

The finished floor elevation for buildings shall be a minimum of one foot (1') above the maximum high water elevation.

Access should be provided for vehicles to easily maintain the forebay (presettling basin) area and not disturb vegetation, or resuspend sediment any more than is absolutely necessary.

The slope of the basin bottom should not exceed 3% in any direction.

A minimum of one foot of freeboard is recommended when establishing the design ponded water depth. Freeboard is measured from the rim of the infiltration facility to the maximum ponding level or from the rim down to the overflow point if overflow or a spillway is included.

Erosion protection of inflow points to the basin must also be provided (e.g., riprap, flow spreaders, energy dissipators (See Volume III, Chapter 3). Select suitable vegetative materials for the basin floor and side slopes to be stabilized. Refer to Volume V, Chapter 7 for recommended vegetation.

Lining material – Basins can be open or covered with a 6 to 12-inch layer of filter material such as coarse sand, or a suitable filter fabric to help prevent the buildup of impervious deposits on the soil surface. A nonwoven geotextile should be selected that will function sufficiently without plugging (see geotextile specifications in Appendix C of Volume V). The filter layer can be replaced or cleaned when/if it becomes clogged.

Vegetation – The embankment, emergency spillways, spoil and borrow areas, and other disturbed areas should be stabilized and planted, preferably with grass, in accordance with Stormwater Site Plan (See Minimum Requirement #1 of Volume I). Without healthy vegetation the surface soil pores would quickly plug.

Refer to Section 2.3.1.2 for additional design criteria.

Maintenance Criteria for Basins

Maintain basin floor and side slopes to promote dense turf with extensive root growth. This enhances infiltration, prevents erosion and consequent sedimentation of the basin floor, and prevents invasive weed growth. Bare spots are to be immediately stabilized and revegetated.

Do not allow vegetation growth to exceed 18 inches in height. Mow the slopes periodically and check for clogging, and erosion. Remove all clippings.

Seed mixtures should be the same as those recommended in Table II-3-3 (Volume II, Chapter 3). The use of slow-growing, stoloniferous grasses will permit long intervals between mowing. Mowing twice a year is generally satisfactory. Fertilizers shall not be applied.

2.2.16 Infiltration Trenches

This section covers design, construction and maintenance criteria specific to infiltration trenches.

2.2.16.1 Description:

Infiltration trenches are generally at least 24 inches wide, and are backfilled with a coarse stone aggregate, allowing for temporary storage of stormwater runoff in the voids of the aggregate material. Stored runoff then gradually infiltrates into the surrounding soil. The surface of the trench can be covered with grating and/or consist of stone, gabion, sand, or a grassed covered area with a surface inlet. Perforated rigid pipe of at least 8-inch diameter can also be used to distribute the stormwater in a stone trench. Perforated pipes used in conjunction with infiltration systems shall be installed with the perforated holes facing downward toward the bottom of the trench.

2.2.16.2 Design Criteria

Due to accessibility and maintenance limitations, infiltration trenches must be carefully designed and constructed.

Infiltration systems shall be located outside of parking and driving areas, unless otherwise approved by the City.

Catch basins shall be provided on each end of the infiltration trench. Access to these catch basins is required for maintenance and operation. Infiltration trenches and galleries shall be designed such that no point in the facility is located more than fifty feet (50') from an access structure.

Backfill Material - The aggregate material for the infiltration trench shall consist of a clean aggregate with a maximum diameter of 3 inches and a minimum diameter of 1.5 inches. Void space for these aggregates shall be in the range of 30 to 40 percent.

Geotextile fabric liner - The aggregate fill material shall be completely encased in an engineering geotextile material. Geotextile should surround all of the aggregate fill material except for the top one-foot, which is placed over the geotextile. Geotextile fabric with acceptable properties must be carefully selected to avoid plugging (see Appendix C of Volume V).

The bottom sand or geotextile fabric is optional.

Refer to the Federal Highway Administration Manual "Geosynthetic Design and Construction Guidelines," Publication No. FHWA HI-95-038, May 1995 for design guidance on geotextiles in drainage applications. Refer to the NCHRP Report 367, "Long-Term Performance of Geosynthetics in Drainage Applications," 1994, for long-term performance data and background on the potential for geotextiles to clog, blind, or to allow piping to occur and how to design for these issues.

Overflow Channel - Because an infiltration trench is generally used for small drainage areas, an emergency spillway is not necessary. However, a non-erosive overflow channel leading to a stabilized watercourse should be provided.

Surface Cover - A stone filled trench can be placed under a porous or impervious surface cover to conserve space.

Observation Well - An observation well should be installed at the lower end of the infiltration trench to check water levels, drawdown time, sediment accumulation, and conduct water quality monitoring. Figure III-2-6 illustrates observation well details. It should consist of a perforated PVC pipe which is 4 to 6 inches in diameter and it should be constructed flush with the ground elevation. For larger trenches a 12-36 inch diameter well can be installed to facilitate maintenance operations such as pumping out the sediment. The top of the well should be capped to discourage vandalism and tampering.

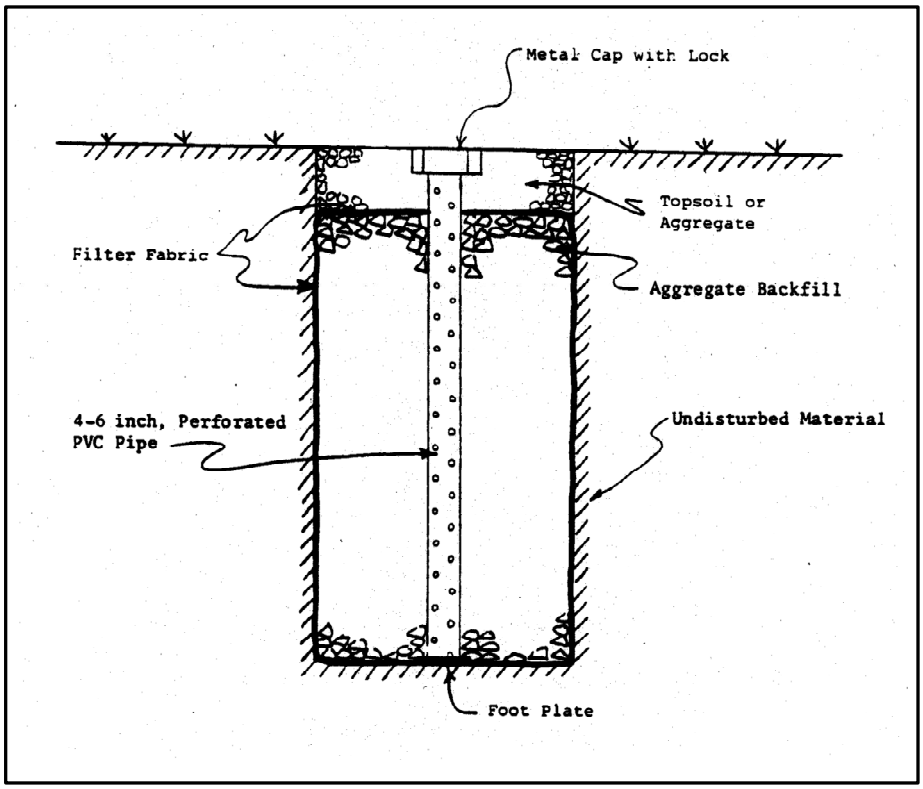

Figure III-2-6. Observation Well Details

2.2.16.3 Construction Criteria

Trench Preparation - Excavated materials must be placed away from the trench sides to enhance trench wall stability. Care should also be taken to keep this material away from slopes, neighboring property, sidewalks and streets. It is recommended that this material be covered with plastic. (see Volume II, Chapter 3, BMP C123: Plastic Covering).

Stone Aggregate Placement and Compaction - The stone aggregate should be placed in lifts and compacted using plate compactors. As a rule of thumb, a maximum loose lift thickness of 12 inches is recommended. The compaction process ensures geotextile conformity to the excavation sides, thereby reducing potential piping and geotextile clogging, and settlement problems.

Potential Contamination - Prevent natural or fill soils from intermixing with the stone aggregate. All contaminated stone aggregate shall be removed and replaced with uncontaminated stone aggregate.

Overlapping and Covering - Following the stone aggregate placement, the geotextile must be folded over the stone aggregate to form a 12 inch minimum longitudinal overlap. When overlaps are required between rolls, the upstream roll should overlap a minimum of 2 feet over the downstream roll in order to provide a shingled effect.

Voids behind Geotextile - Voids between the geotextile and excavation sides must be avoided. Removing boulders or other obstacles from the trench walls is one source of such voids. Natural soils should be placed in these voids at the most convenient time during construction to ensure geotextile conformity to the excavation sides. Soil piping, geotextile clogging, and possible surface subsidence will be avoided by this remedial process.

Unstable Excavation Sites - Vertically excavated walls may be difficult to maintain in areas where the soil moisture is high or where soft or cohesionless soils predominate. Trapezoidal, rather than rectangular, cross-sections may be needed.

2.2.16.4 Maintenance Criteria

Sediment buildup in the top foot of stone aggregate or the surface inlet should be monitored on the same schedule as the observation well.

2.3 Detention Facilities

This section presents the methods, criteria, and details for design and analysis of detention facilities. These facilities provide for the temporary storage of increased surface water runoff resulting from development pursuant to the performance standards set forth in Minimum Requirement #7 for flow control (Volume I). Storm detention systems shall be designed such that the storm drainage from public systems does not discharge into areas of private ownership or private maintenance responsibility.

There are three primary types of detention facilities described in this section: detention ponds, tanks, and vaults.

2.3.1 Detention Ponds

The design criteria in this section are for detention ponds. However, many of the criteria also apply to infiltration ponds (Volume III, Section 2.2 and Volume V), and water quality wetponds and combined detention/wetponds (Volume V). All detention ponds shall be appropriately and aesthetically located, designed and planted. Pre-approval of the design concept, including landscaping is required by the City for all proposed public ponds.

2.3.1.1 Dam Safety for Detention BMPs

Stormwater detention facilities that can impound 10 acre-feet (435,600 cubic feet; 3.26 million gallons) or more above normal, surrounding grade with the water level at the embankment crest are subject to Ecology's dam safety requirements, even if water storage is intermittent and infrequent (WAC 173-175-020). The principal safety concern is for the downstream population at risk if the dam should breach and allow an uncontrolled release of the pond contents. Peak flows from dam failures are typically much larger than the 100-year flows which these ponds are typically designed to accommodate. The Applicant shall contact Ecology's Dam Safety Engineers at Ecology Headquarters if any of these conditions are met.

2.3.1.2 Design Criteria

Standard details for detention ponds are provided in Figure III-2-7 through Figure III-2-10 and Table III-2-10. Control structure discussion and details are provided in Section 2.3.4.

General

- Ponds must be designed as flow-through systems (however, parking lot storage may utilize a back-up system; see Section 2.3.5). Developed flows must enter through a conveyance system separate from the control structure and outflow conveyance system. Maximizing distance between the inlet and outlet is encouraged to promote sedimentation.
- Pond bottoms shall be level and be located a minimum of 0.5 feet below the inlet and outlet to provide sediment storage.
- Design criteria for outflow control structures are specified in Section 2.3.4.
- A geotechnical analysis and report must be prepared for slopes 20% or greater, or if located within 200 feet of the top of a slope 20% or greater or landslide hazard area. The scope of the geotechnical report shall include the assessment of impoundment seepage on the stability of the natural slope where the facility will be located within the setback limits set forth in this section.
- Detention ponds should be designed using rounded shapes and variations in slopes to provide a more natural and aesthetically pleasing facility.
- The total maximum depth of the detention pond from the bottom to the emergency overflow water surface elevation shall be fifteen feet (15').

Side Slopes

- Interior side slopes above any wetpond surfaces, if present, shall not be steeper than 3H:1V unless an analysis is provided by a geotechnical engineer, demonstrating that steeper slopes will be stable. The analysis shall include, at a minimum, an assessment of the existing soil types, soil properties, groundwater conditions, potential for seepage, and stability of proposed slopes. The geotechnical analysis should also provide recommendations to ensure stability both during construction and in perpetuity.
- Exterior side slopes must not be steeper than 2H:1V unless analyzed for stability by a geotechnical engineer.
- A 10 foot level bench is required around the perimeter of the top of ponds to separate the pond facility from adjacent slopes.
- For maintenance and aesthetic reasons, pond designs should minimize structural elements such as retaining walls. For ponds where retaining walls are required, they should be limited to a maximum of three sides.
- Pond walls may be vertical retaining walls, provided:
    - They are constructed of minimum 3,000 psi structural reinforced concrete.
    - A fence is provided along the top of the wall.

- At least 25% of the pond perimeter shall be a vegetated soil slope not steeper than 3H:1V.
- Access for maintenance per this section shall be provided.
- The design is stamped by a licensed civil engineer with structural expertise.

Other retaining walls such as rockeries, concrete, masonry unit walls, and keystone type walls may be used if designed by a geotechnical engineer or civil engineer with structural expertise. If the entire pond perimeter is to be retaining walls, ladders shall be provided on the walls for safety reasons.

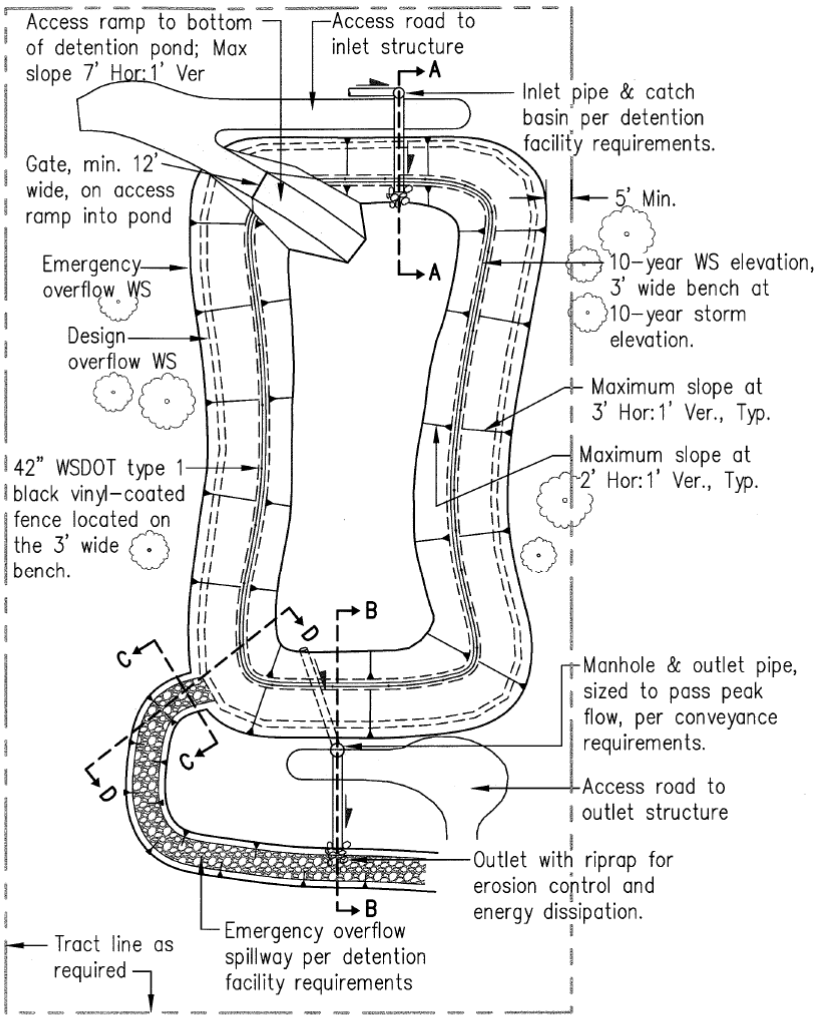

TYPICAL DETENTION POND
Plan View
NTS

Figure III-2-7. Typical Detention Pond

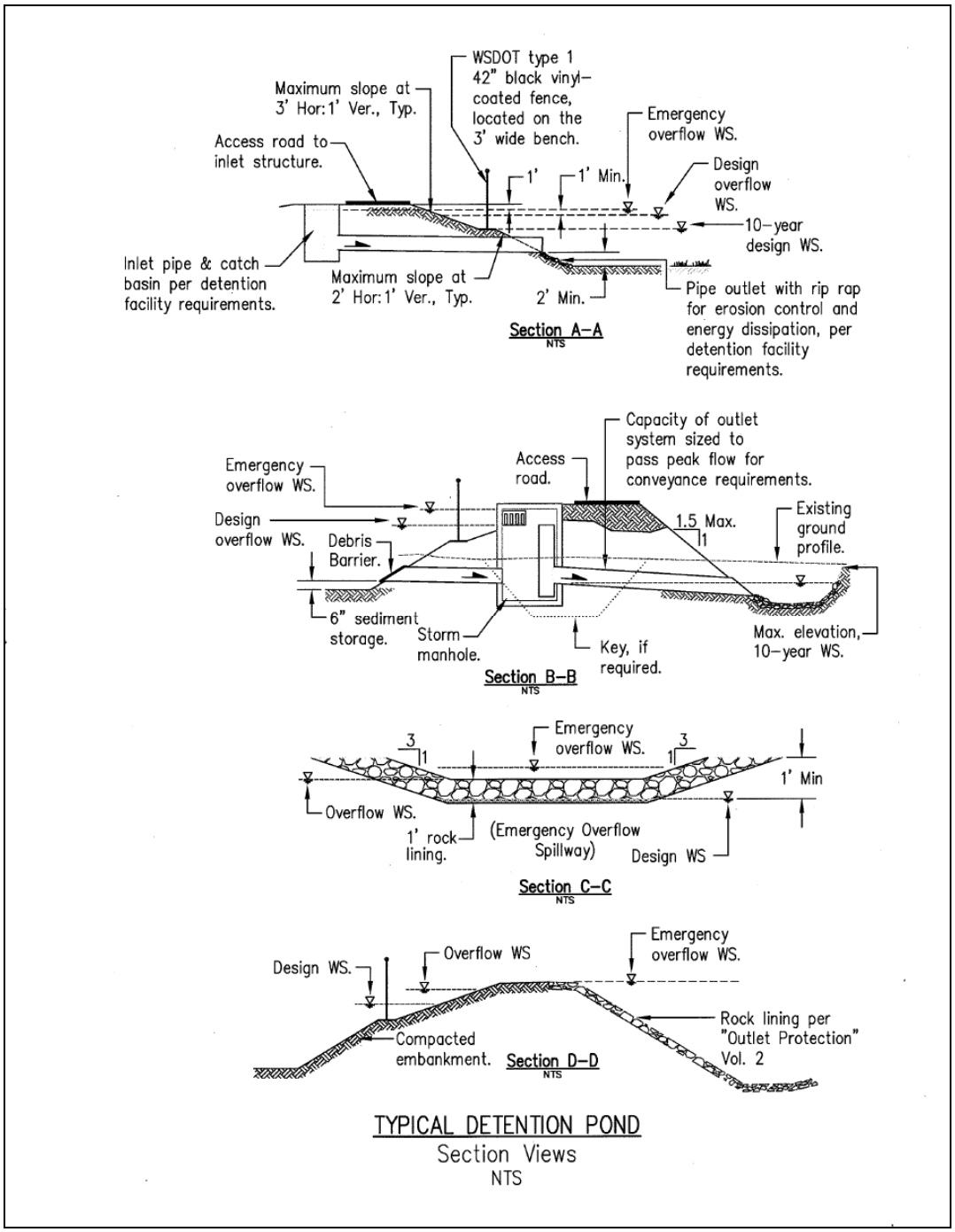

Figure III-2-8. Typical Detention Pond Sections

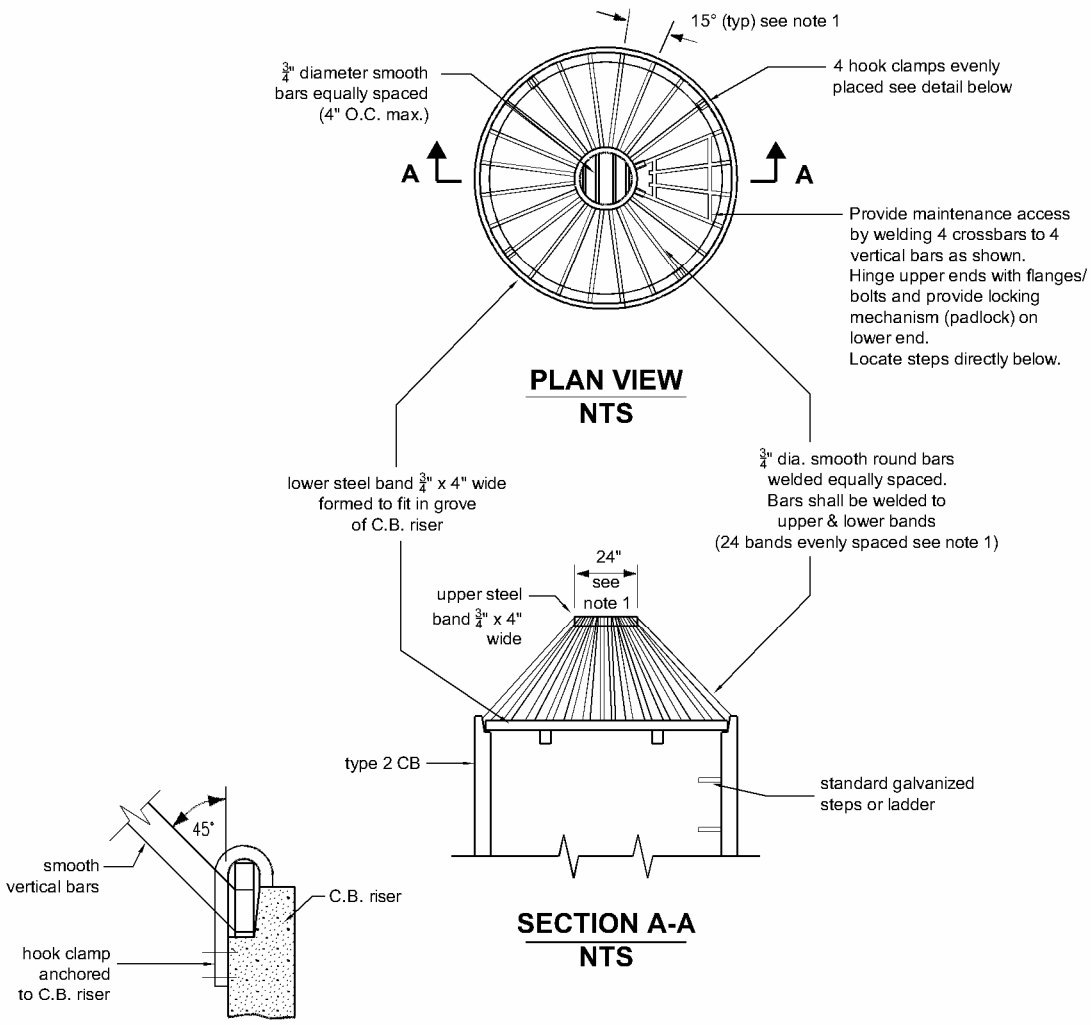

NOTES:

1. Dimensions are for illustration on 54" diameter CB. For different diameter CB's adjust to maintain 45° angle on "vertical" bars and 7" o.c. maximum spacing of bars around lower steel band.
2. Metal parts must be corrosion resistant; steel bars must be galvanized.
3. This debris barrier is also recommended for use on the inlet to roadway cross-culverts with high potential for debris collection (except on type 2 streams)
4. This debris barrier is for use outside of road right-of-way only. For debris cages within road right-of-way.

Figure III-2-9. Overflow Structure

Embankments

- Pond berm embankments higher than 6 feet must be designed by a professional engineer with geotechnical expertise.
- For berm embankments 6 feet or less in height, the minimum top width shall be 6 feet or as recommended by a geotechnical engineer.
- Pond berm embankments must be constructed on native consolidated soil (or adequately compacted and stable fill soils analyzed by a geotechnical engineer) free of loose surface soil materials, roots, and other organic debris.
- Pond berm embankments greater than 4 feet in height must be constructed by excavating a key equal to 50 percent of the berm embankment cross-sectional height and width unless specified otherwise by a geotechnical engineer. Embankment compaction should be accomplished in such a manner as to produce a dense, low permeability engineered fill that can tolerate post-construction settlements with a minimum of cracking. The embankment fill shall be placed on a stable subgrade and compacted to a minimum of 95% of the Standard Proctor Maximum Density, ASTM Procedure D698. Placement moisture content should lie within 1% dry to 3% wet of the optimum moisture content.
- The berm embankment shall be constructed of soils with the following minimum characteristics per the United States Department of Agriculture's Textural Triangle: a minimum of 20% silt and clay, a maximum of 60% sand, a maximum of 60% silt, with nominal gravel and cobble content.
- Anti-seepage filter-drain diaphragms must be placed on outflow pipes in berm embankments impounding water with depths greater than 8 feet at the design water surface. See Dam Safety Guidelines, Part IV, Section 3.3.B. An electronic version of Dam Safety Guidelines is available in PDF format at www.ecy.wa.gov/programs/wr/dams/dss.html

Overflow

- In all ponds, tanks, and vaults, a primary overflow (usually a riser pipe within the control structure; see Section 2.3.4) shall be provided to bypass the 100-year developed peak flow over or around the restrictor system. The design must provide controlled discharge directly into the downstream conveyance system.
- A secondary inlet to the control structure shall be provided in ponds as additional protection against overtopping should the inlet pipe to the control structure become plugged. A grated opening ("jailhouse window") in the control structure manhole functions as a weir (see Figure III-2-8) when used as a secondary inlet.

  The maximum circumferential length of this opening must not exceed one-half the control structure circumference.

  The "birdcage" overflow structure as shown in Figure III-2-9 may also be used as a secondary inlet.

Emergency Overflow Spillway

- In addition to the above overflow provisions, ponds shall have an emergency overflow spillway. For impoundments of 10 acre-feet or greater, the emergency overflow spillway must meet the state's dam safety requirements (see above). For impoundments less than 10 acre-feet, ponds must have an emergency overflow spillway that is sized to pass the 100-year developed peak flow. Emergency overflow spillways shall control the location of pond overtopping such that flow is directed into the downstream conveyance system or public right of way.
- As an option for ponds with berms less than 2 feet in height and located at grades less than 5 percent, emergency overflow may be provided by an emergency overflow structure, such as a Type II manhole fitted with a birdcage as shown in Figure III-2-9. The emergency overflow structure must be designed to pass the 100-year developed peak flow, with a minimum of 6 inches of freeboard, directly to the downstream conveyance system or another acceptable discharge point.
- The emergency overflow spillway shall be armored with riprap in conformance with the "Outlet Protection" BMP in Volume II (BMP C209). The spillway must be armored full width, beginning at a point midway across the berm embankment and extending downstream to where emergency overflows re-enter the conveyance system (See Figure III-2-8).
- Emergency overflow spillway designs must be analyzed as broad-crested trapezoidal weirs as described in Methods of Analysis at the end of this section. Either one of the weir sections shown in Figure III-2-8 may be used.

Access

The following access shall be provided.

- Maintenance access road(s) shall be provided to the control structure and other drainage structures associated with the pond (e.g., inlet or bypass structures).
- An access ramp is required for pond cleaning and maintenance. The ramp must extend to the pond bottom with a maximum slope of 7H:1V (see access road criteria below).
- The internal berm of a wetpond or combined detention and wetpond may be used for access if it is designed to support a loaded 80,000 pound truck considering the berm is normally submerged and saturated.
- For combined detention and wetpond facilities, a 5 foot level bench area is required around the perimeter a minimum of 1 foot, but no more than 3 feet, above the wetpond surface elevation.
- Where a portion of the pond is constructed within a fill slope, an access road shall be provided adjacent to the detention pond along the entire length of the fill.
- Access roads/ramps must meet the following requirements:
    - Access roads may be constructed with an asphalt or gravel surface, or modular grid pavement.

  - Maximum grade shall be 7H:1V percent.
  - Outside turning radius shall be a minimum of 50 feet.
  - Fence gates shall be located only on straight sections of road.
  - Access roads shall be 15 feet in width.
  - A driveway meeting City design standards must be provided where access roads connect to paved public roadways.
- If a fence is required, access shall be limited by a double-posted gate. If a fence is not required, access shall be limited by two fixed bollards on each side of the access road and two removable bollards equally located between the fixed bollards.
- Additional easements or modification to proposed lot boundaries may be required to provide adequate access to detention facilities. Right-of-way may be needed for detention pond maintenance. Any tract not abutting public right-of-way shall have a 15-foot wide extension of the tract to an acceptable access location.

Fencing

- A fence is required when a pond interior side slope is steeper than 3H:1V, or when the wetpond depth is greater than 24 inches. Fencing is required for all vertical walls. Fencing is required if more than 10 percent of slopes are steeper 3H:1V.

  Also note that detention ponds on school sites shall comply with safety standards developed by the Department of Health (DOH) and the Superintendent for Public Instruction (SPI). These standards include what is called a 'non-climbable fence.'

- Fences shall be 42 inches in height (see WSDOT Standard Plan L-2, Type 1 chain link fence).
- Access gates shall be 16 feet in width consisting of two swinging sections 8 feet in width.
- Vertical metal balusters or 9 gauge galvanized steel fabric with bonded black vinyl coating shall be used as fence material with the following aesthetic features:
  - All posts, cross bars, and gates shall be painted or coated black.
  - Fence posts and rails shall conform to WSDOT Standard Plan L-2 for Types 1, 3, or 4 chain link fence.
- For metal baluster fences, Uniform Building Code standards apply.
- Wood fences may be used in residential areas where the fence will be maintained by homeowners associations or adjacent lot owners.
- Wood fences shall have pressure treated posts (ground contact rated) either set in 24-inch deep concrete footings or attached to footings by galvanized brackets. Rails and fence boards may be cedar, pressure-treated fir, or hemlock.

Signage

Detention ponds, infiltration ponds, wetponds, and combined ponds in residential subdivisions shall have a sign placed for maximum visibility from adjacent streets, sidewalks, and paths. An example and specifications for a permanent surface water control pond are provided in Figure III-2-10 and Table III-2-10.

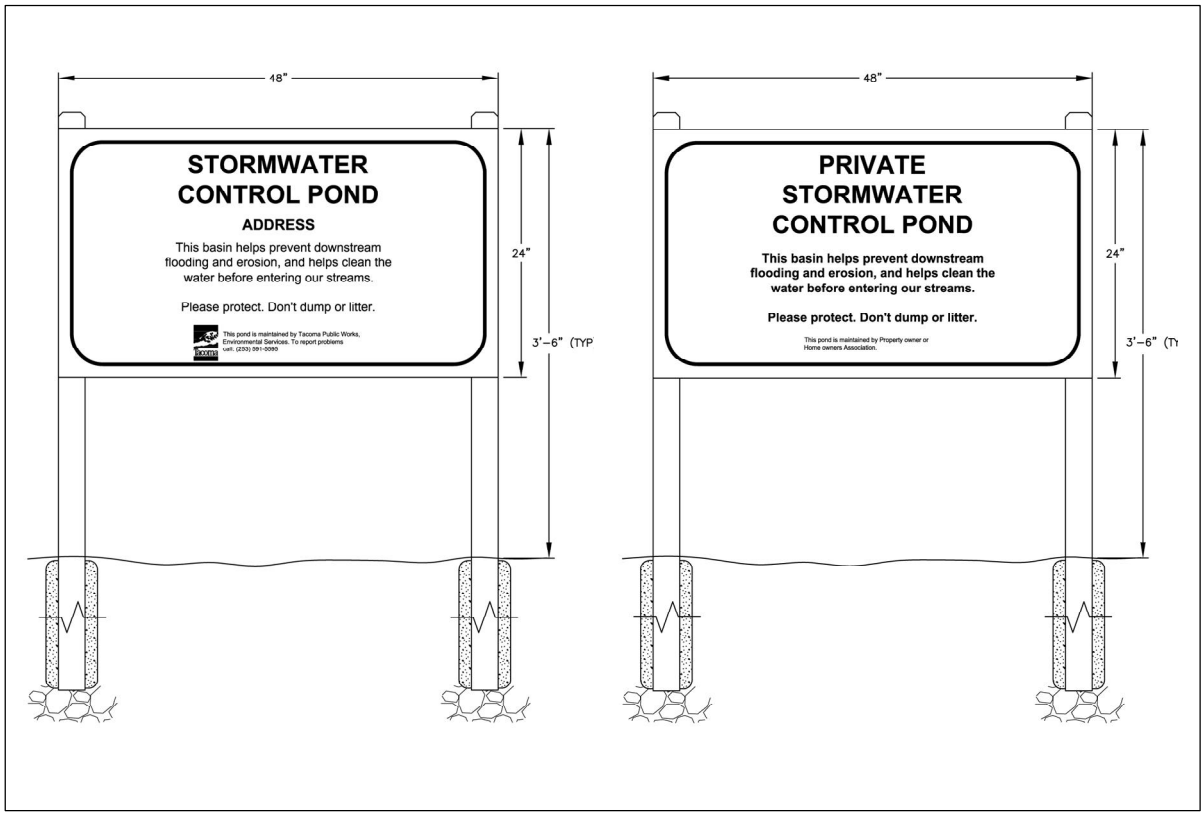

Figure III-2-10. Examples of Permanent Surface Water Control Pond Sign

Table III-2-10. Permanent Surface Water Control Pond Sign Specifications

Size	48 inches by 24 inches
Material	0.125 gauge aluminum
Face	Non-reflective vinyl or 3 coats outdoor enamel (sprayed)
Lettering	Silk-screen enamel where possible, or vinyl letters
Colors	Per City specifications where required
Type Face	Helvetica condensed. Title: 3 inch; Sub-Title: 1-1/2 inch; Text: 1 inch;
Border	Outer 1/8-inch border distance from edge: 1/4 inch All text shall be at least 1-3/4 inches from border.
Installation	Secure to chain link fence if available. Otherwise install on two posts as described below. Top of sign no higher than 42 inches from ground surface.

Posts	Pressure-treated 4" x 4"; beveled tops 1-1/2 inches higher than the top of the sign; mounted atop gravel bed, installed in 30-inch concrete-filled post holes (8-inch minimum diameter)
Placement	Face sign in direction of primary visual or physical access. Do not block any access road. Do not place within 6 feet of structural facilities (e.g. manholes, spillways, pipe inlets).
Special Notes	This facility is lined to protect groundwater (if a liner restricting infiltration of stormwater is used).

Setbacks

The City requires specific setbacks for sites with steep slopes, landslide areas, open water features, springs, wells, and septic tank drain fields. Adequate room for maintenance access and equipment shall also be considered. Project proponents should consult the Auburn City Codes to determine all applicable setback requirements. Where a conflict occurs between setbacks, the most stringent of the setback requirements applies.

Setbacks shall be as follows:

- Stormwater ponds shall be set back at least 100 feet from drinking water wells, septic tanks or drainfields, and springs used for public drinking water supplies.
- Infiltration facilities upgradient of drinking water supplies and within 1, 5, and 10-year time of travel zones must comply with Health Dept. requirements (Washington Wellhead Protection Program, DOH Publication # 331-018). Additional setbacks for infiltration facilities may be required per DOH publication #333-117, On-Site Sewage Systems Chapter 246-272A WAC.
- The 100-year water surface elevation shall be at least 10 feet from any structure or property line. If necessary, setbacks shall be increased from the minimum 10 feet in order to maintain a 1H:1V side slope for future excavation and maintenance. Vertical pond walls may necessitate an increase in setbacks.
- All pond systems shall be setback from sensitive areas, steep slopes, landslide hazard areas, and erosion hazard areas as governed by the Auburn City Code. Facilities near landslide hazard areas must be evaluated by a geotechnical engineer or qualified geologist. The discharge point shall not be placed on or above slopes 20% (5H:1V) or greater, or above erosion hazard areas without evaluation by a geotechnical engineer or qualified geologist and City approval.
- For sites with septic systems, ponds shall be downgradient of the drainfield unless the site topography clearly prohibits subsurface flows from intersecting the drainfield.

Seeps and Springs

Intermittent seeps along cut slopes are typically fed by a shallow groundwater source (interflow) flowing along a relatively impermeable soil stratum. These flows are storm driven. However, more continuous seeps and springs, which extend through longer dry periods, are likely from a deeper groundwater source. When continuous flows are intercepted and directed through flow control facilities, adjustments to the facility design shall be made to account for the additional base flow. Flow monitoring of intercepted flow may be required for design purposes.

Planting Requirements

Exposed earth on the pond bottom and interior side slopes shall be sodded or seeded with an appropriate seed mixture. All remaining areas of the tract shall be planted with grass or be landscaped and mulched with a 4-inch cover of hog fuel or shredded wood mulch. Shredded wood mulch is made from shredded tree trimmings, usually from trees cleared on site. The mulch should be free of garbage and weeds and should not contain excessive resin, tannin, or other material detrimental to plant growth. Multiple plantings and mulching may be required until vegetation has established itself. A bond may be required to guarantee vegetation stabilization for detention facilities.

Landscaping

Public and private storm drainage facilities should enhance natural appearances, protect significant cultural and natural resources, and be appropriate to the use of the site and the surrounding area. Landscaping shall be designed to screen the storm drainage facilities and create a natural-appearing setting while not adversely impacting the function and maintenance of the storm drainage facilities. A Landscape Plan with the Stormwater Site Plan is required for City review and approval.

Landscaping is required for all stormwater tract areas (see below for areas not to be landscaped). Landscaped stormwater tracts may, in some instances, provide a recreational space. In other instances, “naturalistic” stormwater facilities may be placed in open space tracts.

The following criteria shall be incorporated when designing landscaping for storm drainage facilities.

- Identify the type of landscaping and screening appropriate to the site taking into account zoning and proposed use. Landscaping and screening requirements are described in Auburn City Code (ACC) Title 18. The purpose of each type is to reflect the level of landscaping and screening density needed to maintain compatibility with the character of the neighborhood.
- An effort should be made to retain all significant trees on site, evergreens six inches (6”) or greater in diameter, or any deciduous tree four inches (4”) in diameter or greater as defined in ACC Title 18. Diameter measurements are taken at four feet (4’) above grade elevation. Authorization by the City is required for removal of any significant trees.
- Identify the soil type and hydrological regime or each portion of the storm drainage facility to determine appropriate site criteria for plant selection.
- Select tree and shrub species from the Plant Selection Guide contained herein. Plant choices must reflect the functional and aesthetic needs of the site. Fall planting is recommended for optimal acclimation and survivability. An irrigation system will be required for public ponds to insure plant establishment. Irrigation systems may also be needed for private ponds if plantings are done in the spring/summer or in times of limited precipitation, unless other watering provisions are established.
- Plant choices are not restricted to those listed in the Plant Selection Guide, but plant selection must be based on ease of maintenance, appropriateness to the use of the site (commercial, residential, or industrial), and survivability. Plant selection should correspond with street tree requirements and neighborhood character as appropriate. Selections are to be approved by the City during the review process. NOTE: Plants

identified in the Guide are predominately native and reflect the soil conditions and water regimes of the area.

- Develop a Landscape Plan to scale identifying the location and species of existing trees and the location and schedule of species, quantity and size of all proposed tree, shrubs, and ground covers. Drawings should be scaled at 1”=10’ or 1”=20’ to optimally relay information on the plant location and placement. Construction specifications should indicate appropriate soil amendments where necessary and planting specifications as recommended by the American Standards for Nursery Stock and the American National Standards Institute (ANSI).
- Excluding access points, a minimum of ten feet (10’) width of Type-III landscaping in accordance with Auburn City Code 18.50 shall be provided around the exterior length of the pond. This width may be reduced to five feet (5’) if the interior side slopes of the pond are landscaped.
- No tree and shrub planting is allowed with pipeline easements, traveled surfaces, or over underground utilities.
- No trees or shrubs shall be planted within 10 feet of inlet or outlet pipes or manmade drainage structures such as spillways or flow spreaders. Species with roots that seek water, such as willow or poplar, shall be avoided within 50 feet of pipes or manmade structures.
- Planting shall be restricted on berms that impound water either permanently or temporarily during storms. This restriction does not apply to cut slopes that form pond banks, only to berms.
    - Trees or shrubs may not be planted on portions of water-impounding berms taller than four feet high. Only grasses may be planted on berms taller than four feet.

      Grasses allow unobstructed visibility of berm slopes for detecting potential dam safety problems, such as animal burrows, slumping, or fractures in the berm.

    - Trees planted on portions of water-impounding berms less than 4 feet high must be small, not higher than 20 feet mature height, and must have a fibrous root system. Table III-2-11 gives some examples of trees with these characteristics developed for the Central Puget Sound.

  NOTE: The internal berm in a wetpond is not subject to this planting restriction since the failure of an internal berm would be unlikely to create a safety problem.

- All landscape material, including grass, shall be planted in topsoil. Native underlying soils may be made suitable for planting if amended with 4 inches of compost tilled into the subgrade. Compost used should meet specifications for Grade A compost quality. See http://www.ecy.wa.gov/programs/swfa/compost/
- For a naturalistic effect as well as ease of maintenance, trees of shrubs shall be planted in clumps to form “*landscape islands*” rather than planting evenly spaced.
- The landscaped islands shall be a minimum of six feet apart, and if set back from fences or other barriers, the setback distance should also be a minimum of 6 feet.

Where tree foliage extends low to the ground, the 6 feet setback should be counted from the outer drip line of the trees (estimated at maturity).

- This setback allows a 6-foot wide mower to pass around and between clumps.
- Evergreen trees and trees which produce relatively little leaf-fall (such as Oregon ash, mimosa, or locust) are preferred in areas draining to the pond.
- Trees should be set back so that branches do not extend over the pond (to prevent deposition of leaves into the pond).
- Drought tolerant species are recommended.

The following lists contain the suggested trees, plants and grasses to be used in landscaping storm drainage facilities. The trees and plants listed are native to the region and should be chosen over non-native species. The lists shown are not all-inclusive, additional trees and plants may be acceptable upon approval of the City.

Table III-2-11. Plant Selection Guide

Tree Selection Guide for Storm Drainage Detention/Retention Facilities				
Suggested Trees		Tolerates Wet to Saturated Soils	Recommend Moderately Wet to Dry Soils	Recommend Dry Soils
Botanical Name	**Common Name**			
Acer circinatum	Vine Maple			♦
Alnus rubra	Red Alder			♦
Betula papyrifera	Paper Birch	♦		
Corylus cornuta	Hazelnut			♦
Crataegus douglasii	Black Hawthorn			♦
Fraxinus latifolia	Oregon Ash	♦		
Picea sitchensis	Sitka Spruce	♦		
Pinus contorta	Shore Pine			♦
Pinus monticula	Western White Pine			♦
Populus tremuloides	Quaking Aspen	♦		
Prunus virginiana	Choke Cherry			♦
Pseudotsuga menziesii	Douglas Fir			♦
Salix lasiandra	Pacific Willow	♦		
Salix scouleriana	Scouler Willow		♦	
Salix sitchensis	Sitka Willow	♦		
Thuja pljcata	Western Red Cedar		♦	
Tsuga heterophylla	Western Hemlock			♦

Shrub Selection Guide for Storm Drainage Detention/Retention Facilities				
Suggested Shrubs		Tolerates Wet to Saturated Soils	Recommend Moderately Wet to Dry Soils	Recommend Dry Soils
Botanical Name	**Common Name**			
Amelanchier alnifolia	Serviceberry			♦
Cornus sericea	Red Osier Dogwood	♦		
Gaultheria shallon	Salal			♦
Holidiscus discolor	Ocean Spray			♦
Lonicera involucrata	Black Twinberry	♦		
Mahonia aquifolium	Tall Oregon Grape			♦
Mahonia repens	Low Oregon Grape			♦
Oemleria cerasiformis	Indian Plum			♦
Physocarpus capitatus	Pacific Ninebark	♦		
Ribes sanguineum	Red Flowering Currant			♦
Rosa nutkana	Nootka Rose		♦	
Rosa rugosa	Rugosa Rose	♦		
Rubus spectabilis	Salmonberry		♦	
Rubus spectabilis	Thimbleberry		♦	
Sambucus racemosa	Red Elderberry			♦
Symphoricarpos albus	Snowberry			♦
Vaccinium ovatum	Evergreen Huckleberry			♦
Vaccinium parviflorum	Red Huckleberry			♦

Perennial Groundcover Selection Guide for Storm Drainage Detention/Retention Facilities				
Suggested Perennial Groundcover		Tolerates Wet to Saturated Soils	Recommend Moderately Wet to Dry Soils	Recommend Dry Soils
Botanical Name	**Common Name**			
Athyrium filix-femina	Lady Fern		♦	
Dicentra formosa	Bleeding Heart			♦
Polystichum munitum	Sword Fern			♦

Aquatic/Emergent Wetland Selection Guide for Storm Drainage Detention/Retention Facilities		
Suggested Aquatics/Emergent Wetland Plants		Tolerates Open Water (3' + Depth) to Shallow Standing Water (<1' Depth)
Botanical Name	Common Name	
Potamogeton natans	Floating Pondweed	♦
Lotus conicalitatus	Birdsfoot Trefoil	♦
Nymphaea odorata	American Water Lily	♦
Lemna minor	Common Duckweed	♦
Polygonum punctatum	Dotted Smartweed	♦
Polygonum amphibium	Water Smartweed	♦
Oenanthe sarmentosa	Water Parsley	♦
Alisma plantago-aquitica	American Waterplantain	♦
Sparganium spp.	Bur-reed	♦
Sagittaria spp.	Arrowhead	♦
Scirpus acutus	Hardstem Bulrush	♦
Scirpus microcarpus	Small-fruited Bulrush	♦
Carex obnupta	Slough Sedge	♦
Carex languinosa	Wooly Sedge	♦
Eleocharis spp.	Spike Rush	♦
Carex spp.	Sedge	♦
Tolmiea menziesii	Piggy back plant	♦
Hordcum brachyantherum	Meadow Barley	♦

Grass Seed Mixes for Detention/Retention Facilities			
Moisture Condition By Weight	Species	Common Name	Percent
Very Moist	Agrosotis tenuis	Colonial Bentgrass	50
	Festuca ruba	Red Fescue	10
	Alopocuris pratensis	Meadow Foxtail	40
Moist	Festuca arundinacea	Meadow Fescue	70
	Agrosotis tenuis	Colonial Bentgrass	15
	Alopecurus pratensis	Meadow Foxtail	10
	Trifoluim hybridum	White Clover	5
Moist-Dry	Agrosotis tenuis	Colonial Bentgrass	10
	Festuca ruba	Red Fescue	40
	Lolium multiflorum	Annual Ryegrass	40
	Trifolium repens	White Clover	10

Application rates: Hydroseed @ 60 lbs/acre Handseed @ 2 lbs/1000 square feet

Maintenance

A maintenance plan shall be prepared for all surface water management facilities. See Volume I, Appendix D for specific maintenance requirements.

All private drainage systems serving multiple lots shall require a signed Stormwater Maintenance and Access agreement with the City. The agreement shall designate the systems to be maintained and the parties responsible for maintenance. Contact the City to determine the applicability of this requirement to a project.

Any standing water removed during the maintenance operation must be disposed of in a City approved manner. See the dewatering requirements in Volume II of this manual. *Pretreatment may be necessary.* Residuals must be disposed in accordance with state and local solid waste regulations (See Minimum Functional Standards for Solid Waste Handling, Chapter 173-304 WAC).

2.3.1.3 Methods of Analysis

Detention Volume and Outflow

The volume and outflow design for detention ponds must be in accordance with Minimum Requirements # 7 in Volume I and the hydrologic analysis and design methods in Chapter 1 of this Volume. Design guidelines for restrictor orifice structures are given in Section 2.3.4.

The design water surface elevation is the highest elevation which occurs in order to meet the required outflow performance for the pond.

Detention Ponds in Infiltrative Soils

Detention ponds may occasionally be sited on till soils that are sufficiently permeable for a properly functioning infiltration system (see Section 2.2). These detention ponds have a surface discharge and may also utilize infiltration as a second pond outflow. Detention ponds sized with infiltration as a second outflow must meet all the requirements of Section 2.2 for infiltration ponds, including a soils report, testing, groundwater protection, pre-settling, and construction techniques.

Emergency Overflow Spillway Capacity

For impoundments under 10-acre-feet, or ponds not subject to dam safety requirements, the emergency overflow spillway weir section must be designed to pass the 100-year runoff event for developed conditions assuming a broad-crested weir. The **broad-crested weir equation** for the spillway section in Figure III-2-11, for example, would be:

$$Q_{I00} = C\,(2g)^{1/2}\left[\frac{2}{3}LH^{3/2} + \frac{8}{15}(\tan\theta)\,H^{5/2}\right] \qquad \text{(equation 1)}$$

Where Q_{I00} = peak flow for the 100-year runoff event (cfs)
C = discharge coefficient (0.6)
g = gravity (32.2 ft/sec^2)
L = length of weir (ft)

H = height of water over weir (ft)
θ = angle of side slopes (degrees)

NOTE: Q100 is either the peak 10-minute flow computed from the 100-year, 24-hour storm and a Type 1A distribution, or the 100-year, 1-hour flow, indicated by an approved continuous runoff model, multiplied by a factor of 1.6

Assuming C = 0.6 and Tan θ = 3 (for 3:1 slopes), the equation becomes:

$$Q_{I00} = 3.21[LH^{3/2} + 2.4\ H^{5/2}] \qquad \text{(equation 2)}$$

To find width *L* for the weir section, the equation is rearranged to use the computed Q_{I00} and trial values of H (0.2 feet minimum):

$$L = [Q_{I00}/(3.21H^{3/2})] - 2.4\ H \text{ or 6 feet minimum} \qquad \text{(equation 3)}$$

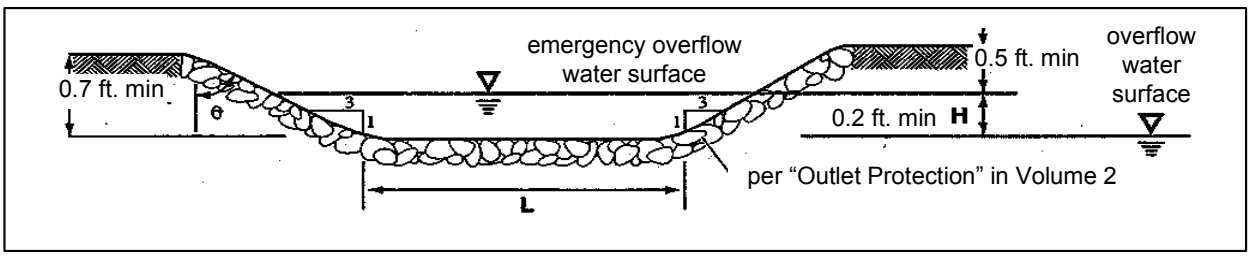

Figure III-2-11. Weir Section for Emergency Overflow Spillway

2.3.2 Detention Tanks

Detention tanks are underground storage facilities typically constructed with large diameter pipe. Standard detention tank details are shown in Figure III-2-12 and Figure III-2-13. Control structure details are shown in Section 2.3.4.

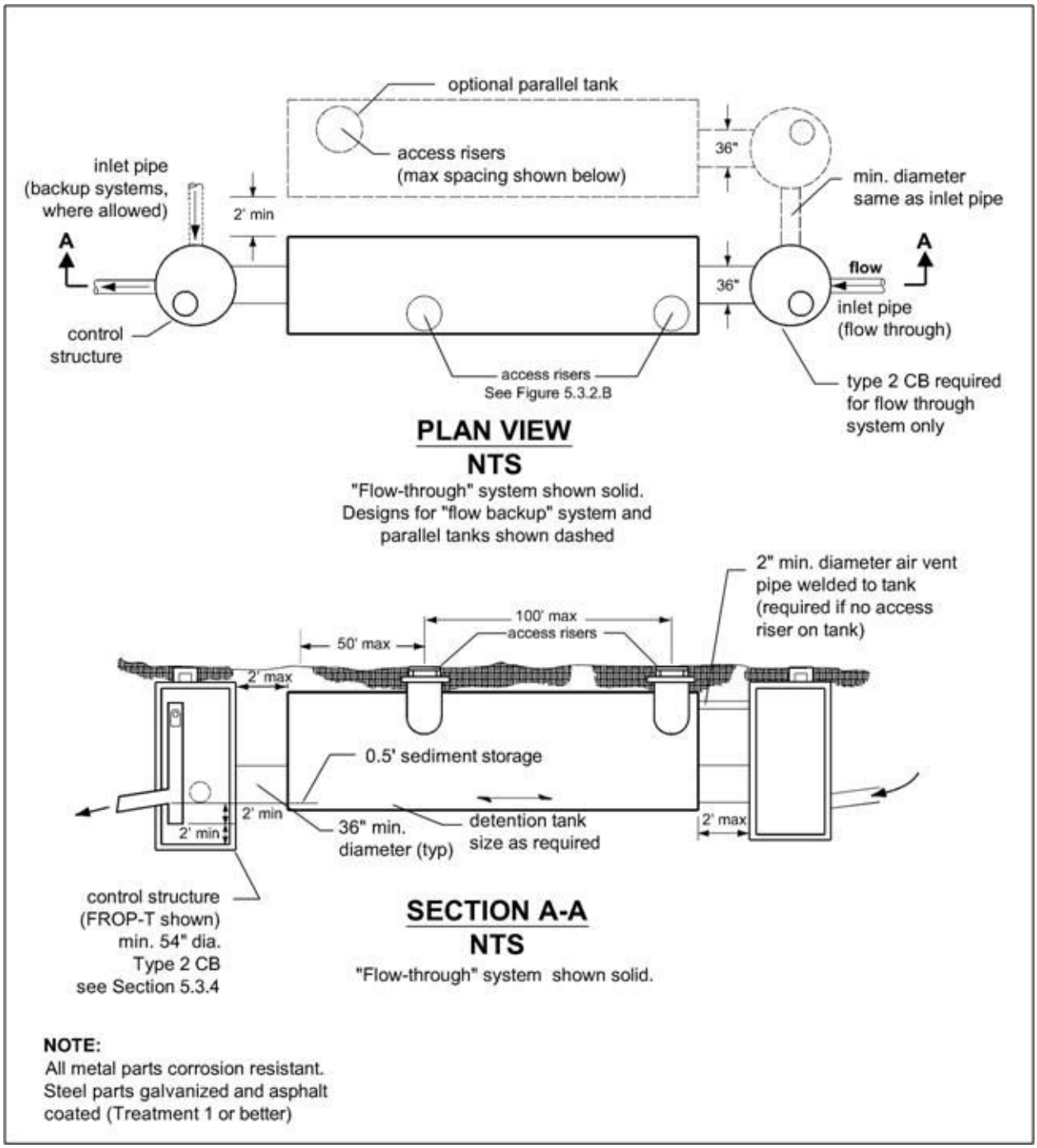

Figure III-2-12. Typical Detention Tank

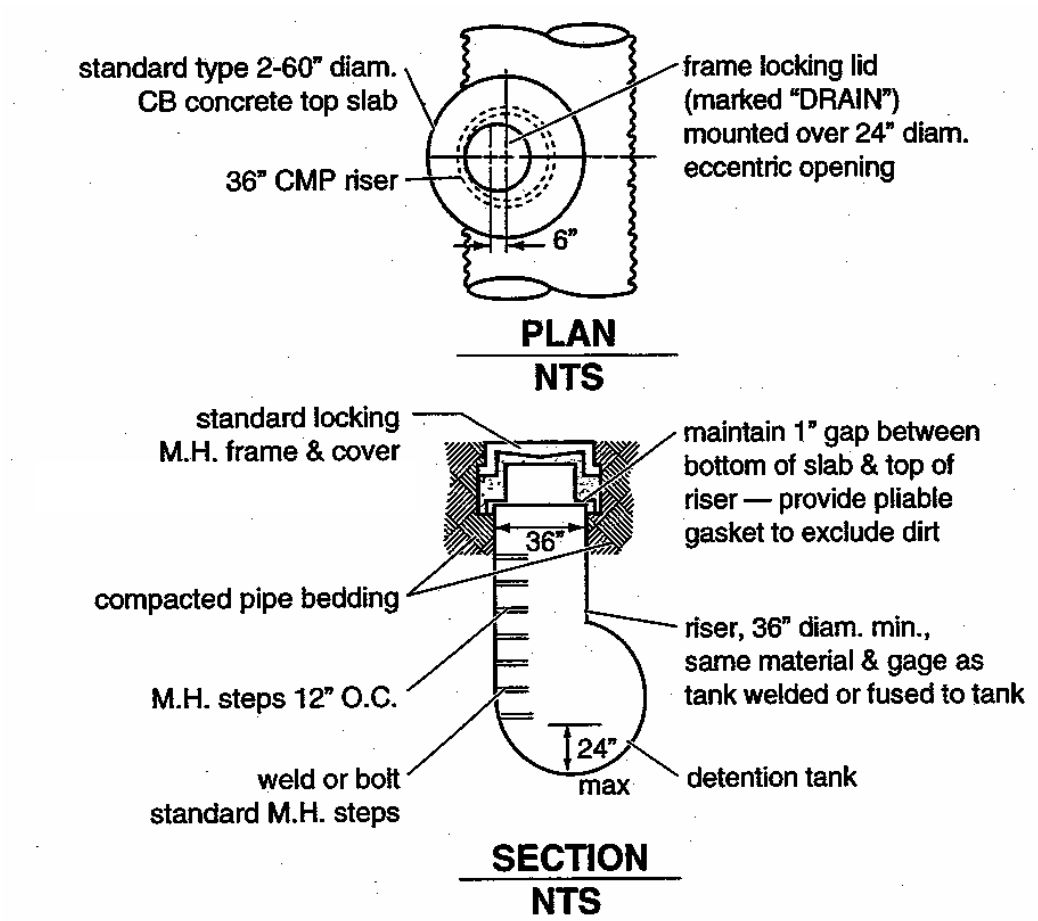

Notes:

1. Use adjusting blocks as required to bring frame to grade.
2. All materials to be aluminum or galvanized and asphalt coated (Treatment 1 or better).
3. Must be located for access by maintenance vehicles.
4. May substitute WSDOT special Type IV manhole (RCP only).

Figure III-2-13. Detention Tank Access Detail

2.3.2.1 Design Criteria

General

- Tanks shall be designed as flow-through systems with manholes in line (see Figure III-2-12) to promote sediment removal and facilitate maintenance. Tanks shall also be designed to allow stormwater to back-up into the system if the tank is preceded by water quality facilities.
- The detention tank bottom shall be located 6 inches below the inlet and outlet to provide dead storage for sediment. If arch pipe is used, the minimum dead storage is 0.5 feet.
- The minimum pipe diameter for a detention tank is 36 inches.
- The minimum thickness for CMP shall be 12-gauge.
- Tanks larger than 36 inches may be connected to each adjoining structure with a short section (2-foot maximum length) of 35-inch minimum diameter pipe. These sections shall not be considered as access when determining required access points.
- Details of outflow control structures are given in Section 2.3.4.

Materials

See City of Auburn Construction Standards Section 9.05.

Structural Stability

Tanks must meet structural requirements for overburden support and traffic loading if appropriate. H-20 live loads shall be accommodated for tanks lying under parking areas and access roads. Metal tank end plates shall be designed for structural stability at maximum hydrostatic loading conditions. Tanks shall not be placed in fill slopes, unless analyzed in a geotechnical report for stability and constructability.

Buoyancy

Buoyancy calculations shall be required where groundwater may induce flotation. Engineers are required to address this issue in project design documentation.

Access

The following requirements for access shall be met along with those stipulated in Section 2.3.1.

- The maximum depth from finished grade to tank invert shall be 20 feet.
- Access openings shall be positioned a maximum of 50 feet from any location within the tank. A minimum of one access opening per tank shall be provided.
- All tank access openings shall have round, solid locking lids (usually 1/2 to 5/8-inch diameter Allen-head cap screws).

- Thirty-six inch minimum diameter CMP riser-type manholes (see Figure III-2-13) of the same gauge as the tank material may be used for access along the length of the tank and at the upstream terminus of the tank in a backup system. The top slab is separated (1-inch minimum gap) from the top of the riser to allow for deflections from vehicle loadings without damaging the riser tank.
- All tank access openings must be readily accessible to maintenance vehicles.
- Tanks must comply with the OSHA confined space requirements, which include clearly marking entrances to confined space areas. This may be accomplished by hanging a removable sign in the access riser(s) just under the access lid.

Access Roads

Access roads are needed to all detention tanks, control structures, and risers. The access roads must be designed and constructed as specified for detention ponds in Section 2.3.1.

Setbacks

For setback requirements see Section 2.3.1.

Maintenance

Provisions to facilitate maintenance operations must be built into the project when it is installed. Maintenance must be a basic consideration in design and in determination of first cost. See Volume I, Appendix D for specific maintenance requirements.

Methods of Analysis

Detention Volume and Outflow

The volume and outflow design for detention tanks must be in accordance with Minimum Requirement # 7 in Volume I and the hydrologic analysis and design methods in Volume III, Chapter 1. Restrictor and orifice design are given in Section 2.3.4.

2.3.3 Detention Vaults

Detention vaults are box-shaped underground storage facilities typically constructed with reinforced concrete. A standard detention vault detail is shown in Figure III-2-14. Control structure details are shown in Section 2.3.4. A detention vault may be used for commercial, industrial, or roadway projects when there are space limitations precluding the use of aboveground storage options. Vaults are box-shaped underground storage facilities typically constructed with reinforced concrete. The use of public vaults for residential development is discouraged. A design of a detention vault may be modified into a wetvault to provide stormwater quality (see Volume V 8.2.2)

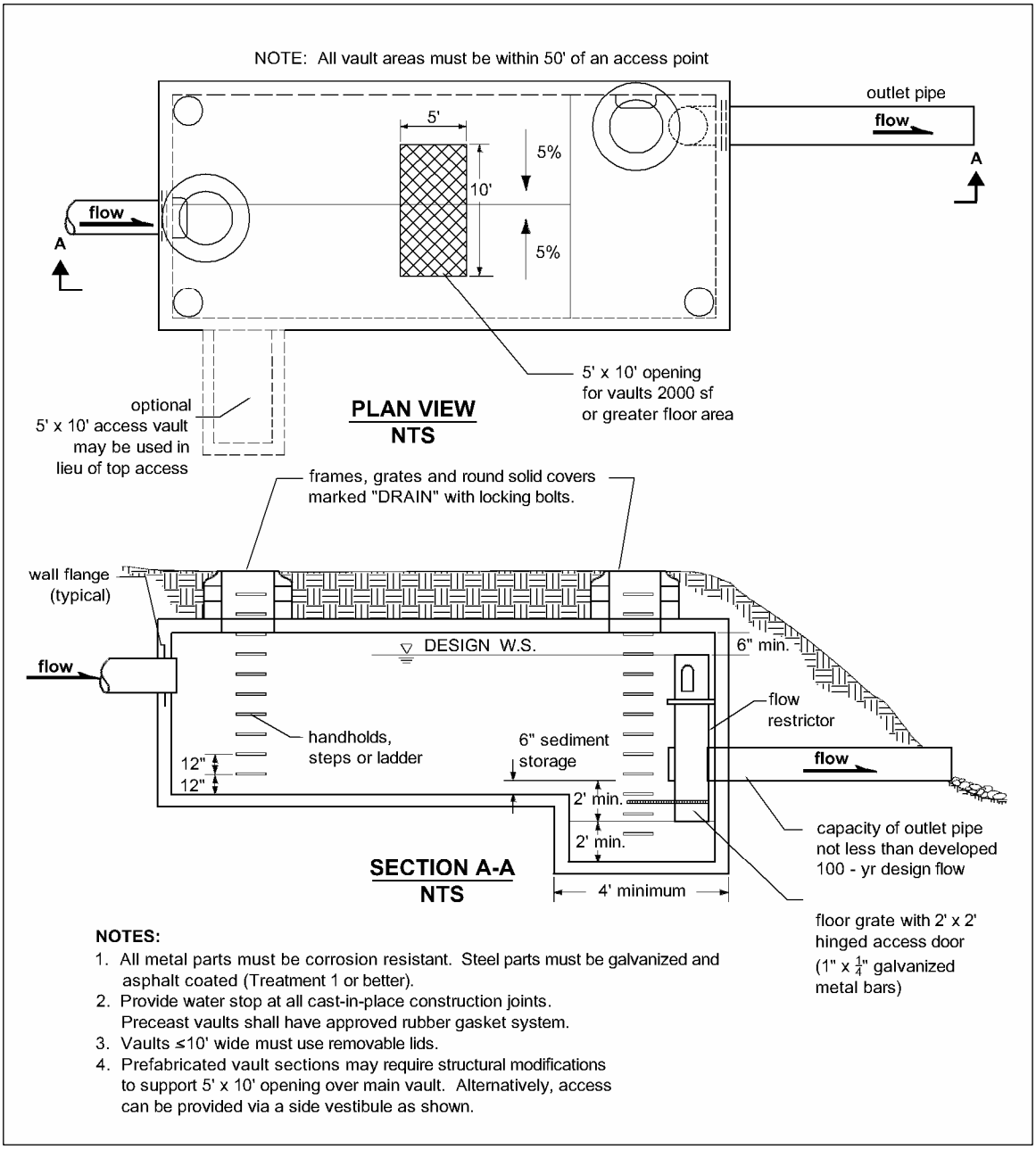

Figure III-2-14. Typical Detention Vault

2.3.3.1 Design Criteria

General

- Detention vaults shall be designed as flow-through systems with bottoms level (longitudinally) or sloped toward the inlet to facilitate sediment removal. Distance between the inlet and outlet should be maximized (as feasible).
- The detention vault bottom shall slope at least 5 percent from each side towards the center, forming a broad "v" to facilitate sediment removal. More than one "v" may be used to minimize vault dept. The vault bottom may be flat with 0.5 – 1 foot of sediment storage if removable panels are provided over the entire vault. It is recommended that the removable panels be at grade, have stainless steel lifting eyes, and weigh no more than 5 tons per panel.
- The invert elevation of the outlet shall be elevated above the bottom of the vault to provide an average 6 inches of sediment storage over the entire bottom. The outlet shall also be elevated a minimum of 2 feet above the orifice to retain oil within the vault.
- Details of outflow control structures are given in Section 2.3.4.

Buoyancy

A buoyancy analysis is required to demonstrate that the vault will not be impacted by ground water.

Materials

Minimum 3,000 psi structural reinforced concrete may be used for detention vaults. All construction joints must be provided with water stops.

Structural Stability

All vaults must meet structural requirements for overburden support and H-20 traffic loading (See Standard Specifications for Highway Bridges, 1998 Interim Revisions, American Association of State Highway and Transportation Officials). Vaults located under roadways must meet live load requirements of the City. Cast-in-place wall sections must be designed as retaining walls. Structural designs for cast-in-place vaults must be stamped by a licensed civil engineer with structural expertise. Vaults must be placed on stable, well-consolidated native material with suitable bedding. Vaults must not be placed in fill slopes, unless analyzed in a geotechnical report for stability and constructability.

Access

Access must be provided over the inlet pipe and outlet structure. The following guidelines for access shall be used.

- Access openings shall be positioned a maximum of 50 feet from any location within the vault. Additional access points may be needed on large vaults.
- An access opening shall be provided directly above the lowest point of each "v" in the vault floor.

- An access opening shall be provided directly above each connection to the vault.
- For vaults with greater than 1,250 square feet of floor area, a 5' x 10' removable panel should be provided over the inlet pipe (instead of a standard frame, grate and solid cover). Alternatively, a separate access vault may be provided, as shown in Figure III-2-14.
- For vaults under roadways, the removable panel must be located outside the travel lanes. Alternatively, multiple standard locking manhole covers may be provided.
- Ladders and hand-holds shall be provided at all access openings, and as needed to meet OSHA confined space requirements.
- All access openings, except those covered by removable panels, may have round, solid locking lids, or 3-foot square, locking diamond plate covers.
- Vaults with widths 10 feet or less must have removable lids.
- The maximum depth from finished grade to the vault invert shall be 15 feet.
- Internal structural walls of large vaults should be provided with openings sufficient for maintenance access between cells. The openings should be sized and situated to allow access to the maintenance "v" in the fault floor.
- A minimum of two access openings shall be provided into each cell.
- The minimum internal height shall be 7 feet from the highest point of the vault floor (not sump), and the minimum width shall be 4 feet. However, concrete vaults may be a minimum 3 feet in height and width if used as a tank with access manholes at each end, and if the width is no larger than the height. Also the minimum internal height requirement may not be needed for any areas covered by removable panels.
- Vaults must comply with the OSHA confined space requirements, which include clearly marking entrances to confined space areas. This may be accomplished by hanging a removable sign in the access riser(s), just under the access lid.
- Ventilation pipes (minimum 12-inch diameter or equivalent) shall be provided in all four corners of vaults to allow for artificial ventilation prior to entry of maintenance personnel into the vault. Alternatively, removable panels over the entire vault, or manhole access at 12-foot spacing, may be provided.

Access Roads

Access shall be designed and constructed as specified for detention ponds in Section 2.3.1.

Setbacks

For setback requirements see Section 2.3.1.

Maintenance

Provisions to facilitate maintenance operations must be built into the project when it is installed. Maintenance must be a basic consideration in design and in determination of first cost. See Volume I, Appendix D for specific maintenance requirements.

2.3.3.2 Methods of Analysis

Detention Volume and Outflow

The volume and outflow design for detention vaults must be in accordance with Minimum Requirement # 7 in Volume I and the hydrologic analysis and design methods in Chapter 1. Restrictor and orifice design are given in Section 2.3.4.

2.3.4 Control Structures

Control structures are catch basins or manholes with a restrictor device for controlling outflow from a facility to meet the desired performance.

The restrictor device usually consists of two or more orifices and/or a weir section sized to meet performance requirements. Standard control structure details are shown in Figure III-2-15 through Figure III-2-17.

2.3.4.1 Design Criteria

Multiple Orifice Restrictor

In most cases, control structures need only two orifices: one at the bottom and one near the top of the riser, although additional orifices may best utilize detention storage volume. Several orifices may be located at the same elevation if necessary to meet performance requirements.

- Minimum orifice diameter is 0.5 inches. In some instances, a 0.5-inch bottom orifice will be too large to meet target release rates, even with minimal head. In these cases, do not reduce the live storage depth to less than 3 feet in an attempt to meet the performance standards. Under such circumstances, flow-throttling devices may be a feasible option. These devices will throttle flows while maintaining a plug-resistant opening.
- Orifices may be constructed on a tee section as shown in Figure III-2-15 or on a baffle as shown in Figure III-2-16.
- In some cases, performance requirements may require the top orifice/elbow to be located too high on the riser to be physically constructed (e.g. a 13-inch diameter orifice positioned 0.5 feet from the top of the riser). In these cases, a notch weir in the riser pipe may be used to meet performance requirements (see Figure III-2-17).
- Backwater effects from water surface elevations in the conveyance system shall be evaluated. High tailwater elevations may affect performance of the restrictor system and reduce live storage volumes. Backwater effects shall also be analyzed for areas that are influenced by tides.

Riser and Weir Restrictor

- Properly designed weirs may be used as flow restrictors (see Figure III-2-17 and Figure III-2-19 through Figure III-2-21). However, they must be designed to provide for primary overflow of the developed 100-year peak flow discharging to the detention facility.

- The combined orifice and riser (or weir) overflow may be used to meet performance requirements. However, the design must still provide for primary overflow of the developed 100-year peak flow assuming all orifices are plugged. Figure III-2-22 can be used to calculate the head in feet above a riser of given diameter and flow.

Access

The following guidelines for access shall be used.

- An access road to the control structure is needed for inspection and maintenance, and must be designed and constructed as specified for detention ponds in Section 2.3.1.
- Manhole and catch basin lids for control structures must be locking, and rim elevations must match proposed finish grade.
- Manholes and catch basins must meet the OSHA confined space requirements, which include clearly marking entrances to confined space areas. This may be accomplished by hanging a removable sign in the access riser, just under the access lid.

Information Plate

A brass or stainless steel plate shall be permanently attached inside each control structure with the following information engraved on the plate:

- Name and file number of project
- Name and company of (1) developer, (2) engineer, and (3) contractor
- Date constructed
- Date of manual used for design
- Outflow performance criteria
- Release mechanism size, type, and invert elevation
- List of stage, discharge, and volume at one-foot increments
- Elevation of overflow
- Recommended frequency of maintenance.

2.3.4.2 Maintenance

Control structures require regular maintenance and cleaning. Maintenance frequency and procedures shall be addressed in the facility maintenance manual.

Volume I, Appendix D provides maintenance recommendations for control structures and catch basins.

2.3.4.3 Methods of Analysis

This section presents the methods and equations for design of **control structure restrictor devices.** Included are details for the design of orifices, rectangular sharp-crested weirs, v-notch weirs, sutro weirs, and overflow risers.

Orifices

Flow-through orifice plates in the standard tee section or turn-down elbow may be approximated by the general equation:

$$Q = C\,A\sqrt{2gh} \qquad \text{(equation 4)}$$

where Q = flow (cfs)
C = coefficient of discharge (0.62 for plate orifice)
A = area of orifice (ft^2)
h = hydraulic head (ft)
g = gravity (32.2 ft/sec^2)

Figure III-2-18 illustrates this simplified application of the orifice equation.

The diameter of the orifice is calculated from the flow. The orifice equation is often useful when expressed as the orifice diameter in inches:

$$d = \sqrt{\frac{36.88Q}{\sqrt{h}}} \qquad \text{(equation 5)}$$

where *d* = orifice diameter (inches)
Q = flow (cfs)
h = hydraulic head (ft)

Rectangular Sharp-Crested Weir

The rectangular sharp-crested weir design shown in Figure III-2-19 may be analyzed using standard weir equations for the fully contracted condition.

$$Q = C\,(L - 0.2H)H^{3/2} \qquad \text{(equation 6)}$$

where Q = flow (cfs)
C = 3.27 + 0.40 H/P (ft)
H, P = as shown in Figure III-2-19
L = length (ft) of the portion of the riser circumference as necessary not to exceed 50 percent of the circumference
D = inside riser diameter (ft)

NOTE: This equation accounts for side contractions by subtracting 0.1H from L for each side of the notch weir.

V-Notch Sharp - Crested Weir

V-notch weirs as shown in Figure III-2-20 may be analyzed using standard equations for the fully contracted condition.

Proportional or Sutro Weir

Sutro weirs are designed so that the discharge is proportional to the total head. This design may be useful in some cases to meet performance requirements.

The sutro weir consists of a rectangular section joined to a curved portion that provides proportionality for all heads above the line A-B (see Figure III-2-21). The weir may be symmetrical or non-symmetrical.

For this type of weir, the curved portion is defined by the following equation (calculated in radians):

$$\frac{x}{b} = 1 - \frac{2}{\pi} Tan^{-1} \sqrt{\frac{Z}{a}} \qquad \text{(equation 7)}$$

Where a, b, x and Z are as shown in Figure III-2-14.

The head-discharge relationship is:

$$Q = C_d\, b \sqrt{2ga}\,(h_1 - \frac{a}{3}) \qquad \text{(equation 8)}$$

where Q = flow (cfs)
g = gravity

Values of *Cd* for both symmetrical and non-symmetrical sutro weirs are summarized in Table III-2-12.

When b > 1.50 or a > 0.30, use Cd=0.6.

Riser Overflow

The nomograph in Figure III-2-22 can be used to determine the head (in feet) above a riser of given diameter and for a given flow (usually the 100-year peak flow for developed conditions).

NOTE: Q100 is either the peak 10-minute flow computed from the 100-year, 24-hour storm and a Type 1A distribution, or the 100-year, 1-hour flow, indicated by an approved continuous runoff model, multiplied by a factor of 1.6

Table III-2-12. Values of Cd for Sutro Weirs

C_d Values, Symmetrical					
a (ft)	**b (ft)**				
	0.50	**0.75**	**1.0**	**1.25**	**1.50**
0.02	0.608	0.613	0.617	0.6185	0.619
0.05	0.606	0.611	0.615	0.617	0.6175
0.10	0.603	0.608	0.612	0.6135	0.614
0.15	0.601	0.6055	0.610	0.6115	0.612
0.20	0.599	0.604	0.608	0.6095	0.610
0.25	0.598	0.6025	0.6065	0.608	0.6085
0.30	0.597	0.602	0.606	0.6075	0.608
***C_d* Values, Non-Symmetrical**					
a (ft)	**b (ft)**				
	0.50	**0.75**	**1.0**	**1.25**	**1.50**
0.02	0.614	0.619	0.623	0.6245	0.625
0.05	0.612	0.617	0.621	0.623	0.6235
0.10	0.609	0.614	0.618	0.6195	0.620
0.15	0.607	0.6115	0.616	0.6175	0.618
0.20	0.605	0.610	0.614	0.6155	0.616
0.25	0.604	0.6085	0.6125	0.614	0.6145
0.30	0.603	0.608	0.612	0.6135	0.614

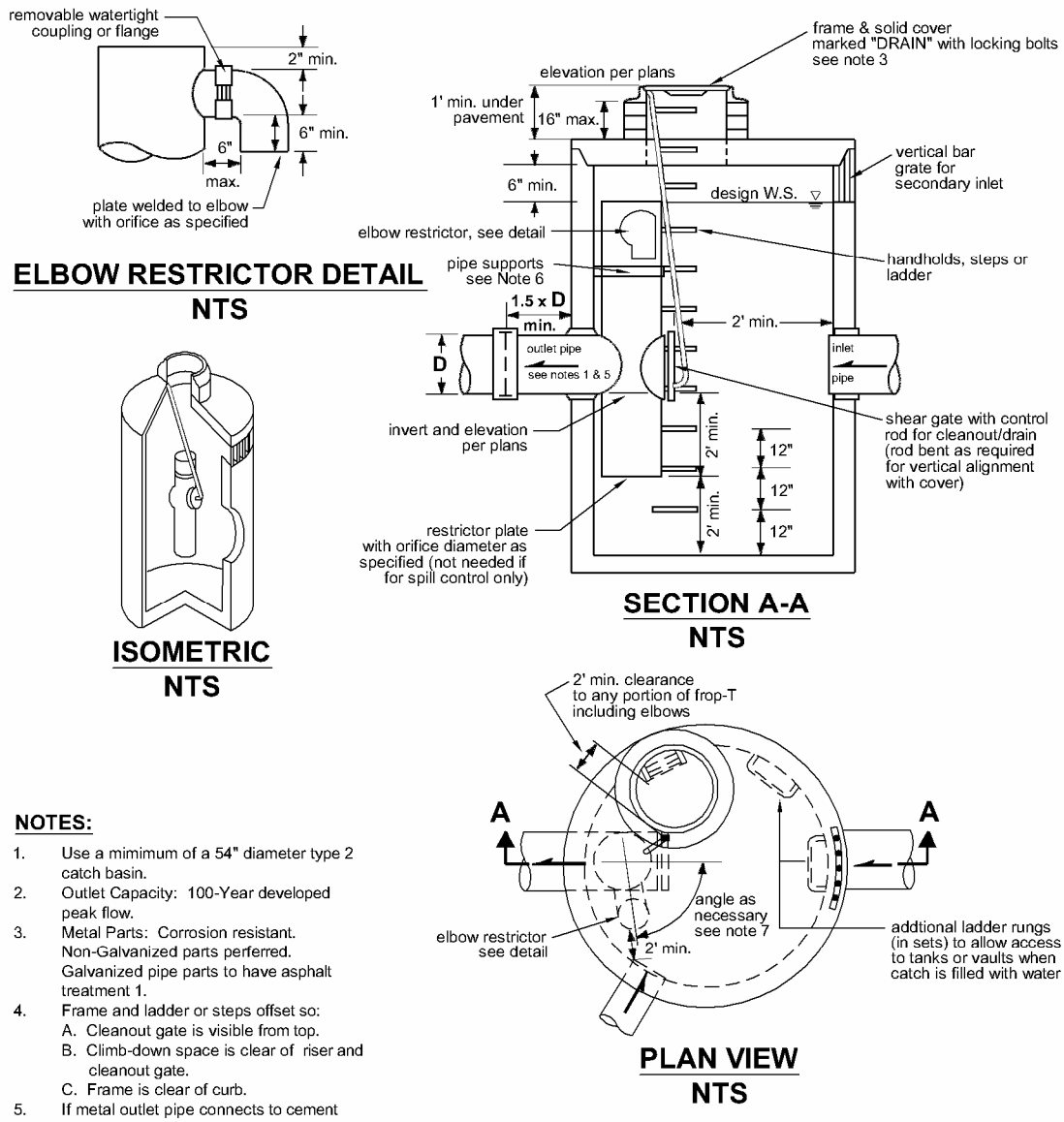

NOTES:

1. Use a mimimum of a 54" diameter type 2 catch basin.
2. Outlet Capacity: 100-Year developed peak flow.
3. Metal Parts: Corrosion resistant. Non-Galvanized parts perferred. Galvanized pipe parts to have asphalt treatment 1.
4. Frame and ladder or steps offset so:
   A. Cleanout gate is visible from top.
   B. Climb-down space is clear of riser and cleanout gate.
   C. Frame is clear of curb.
5. If metal outlet pipe connects to cement concrete pipe: outlet pipe to have smooth O.D. equal to concrete pipe I.D. less $\frac{1}{4}$".
6. Provide at least one 3" X .090 gage support bracket anchored to concrete wall. (maximum 3'-0" vertical spacing)
7. Locate elbow restrictor(s) as necessary to provide minimum clearance as shown.
8. Locate additional ladder rungs in structures used as access to tanks and vaults to allow access when catch basin is filled with water.

Figure III-2-15. Flow Restrictor (TEE)

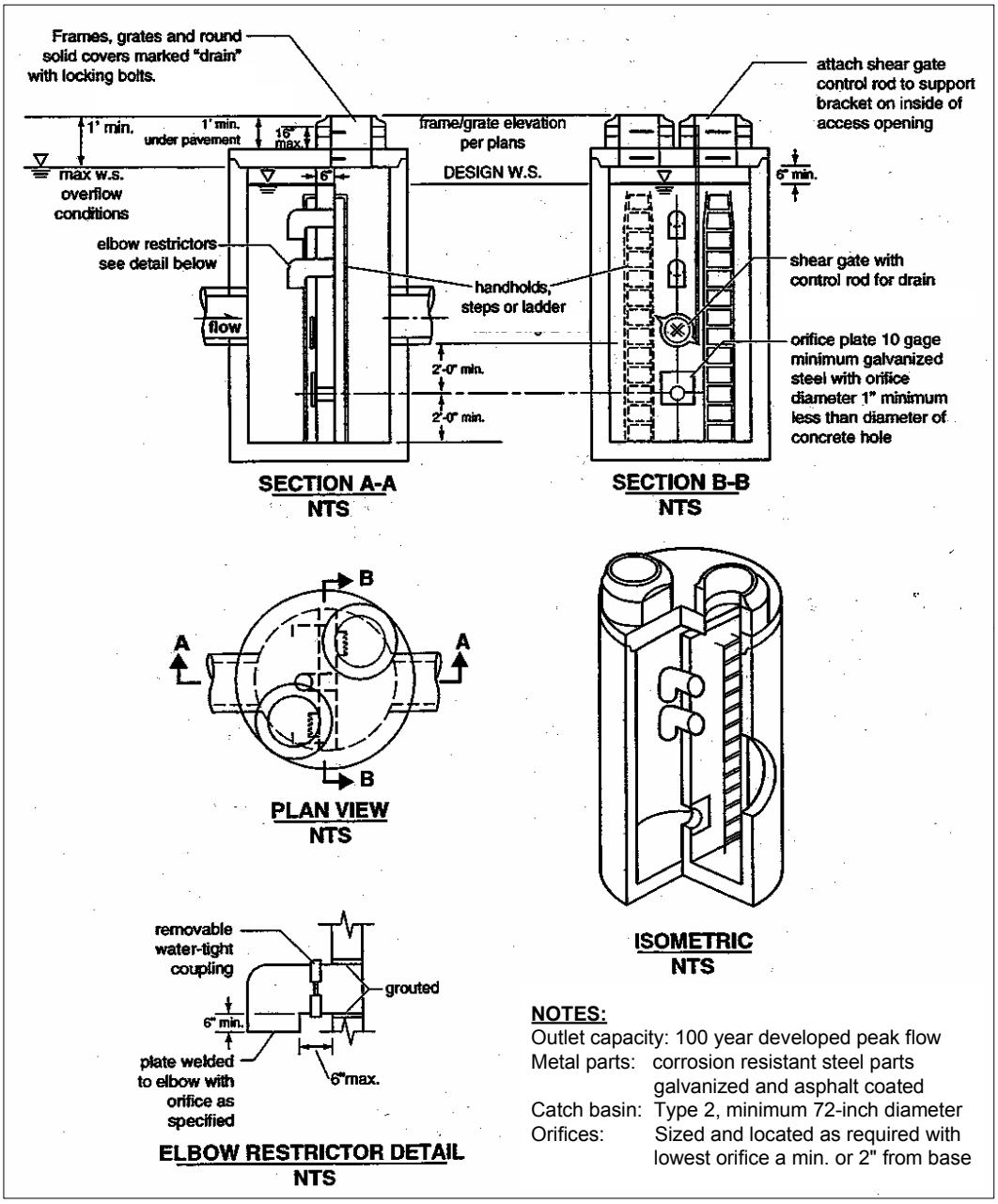

Figure III-2-16. Flow Restrictor (Baffle)

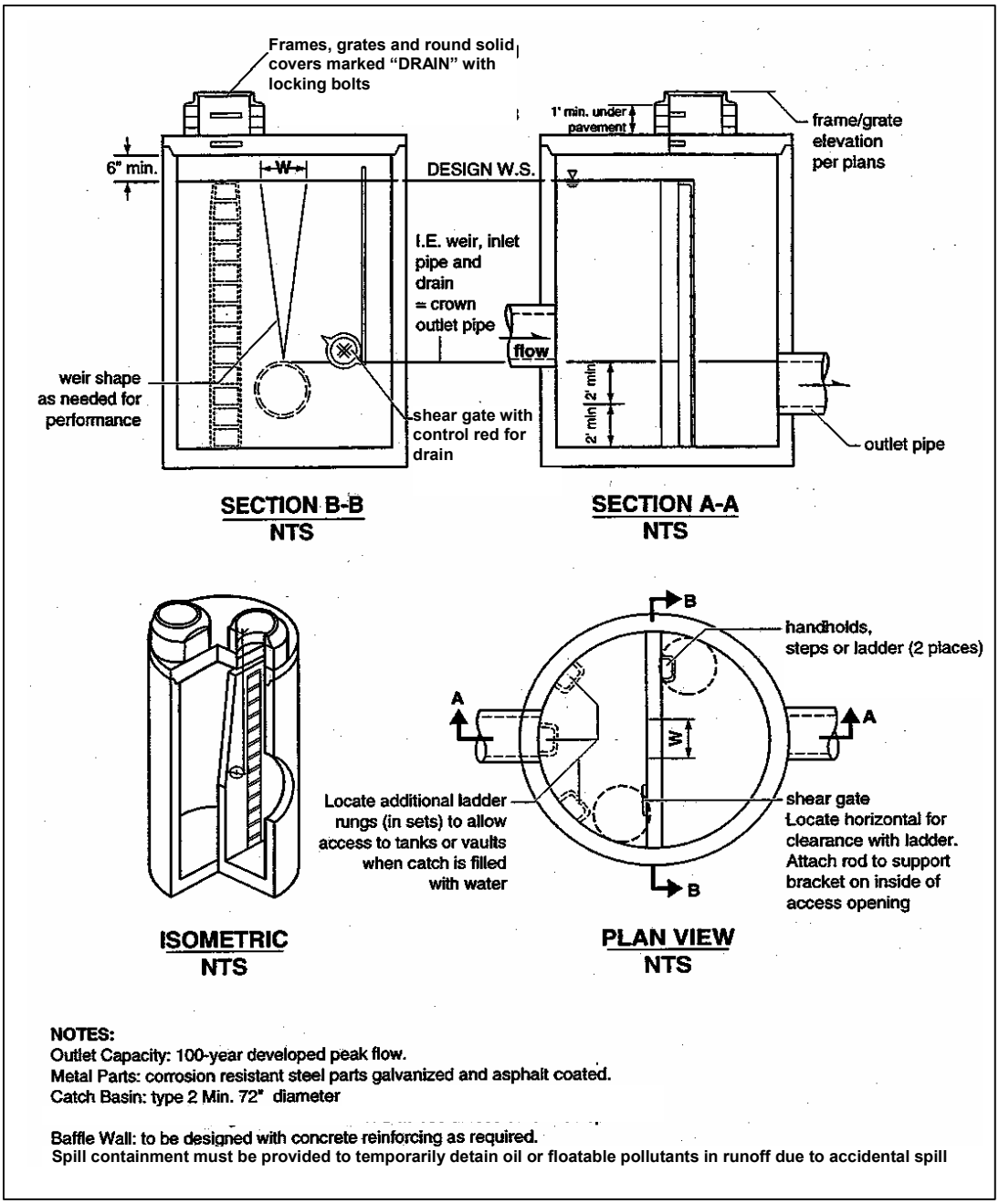

Figure III-2-17. Flow Restrictor (Weir)

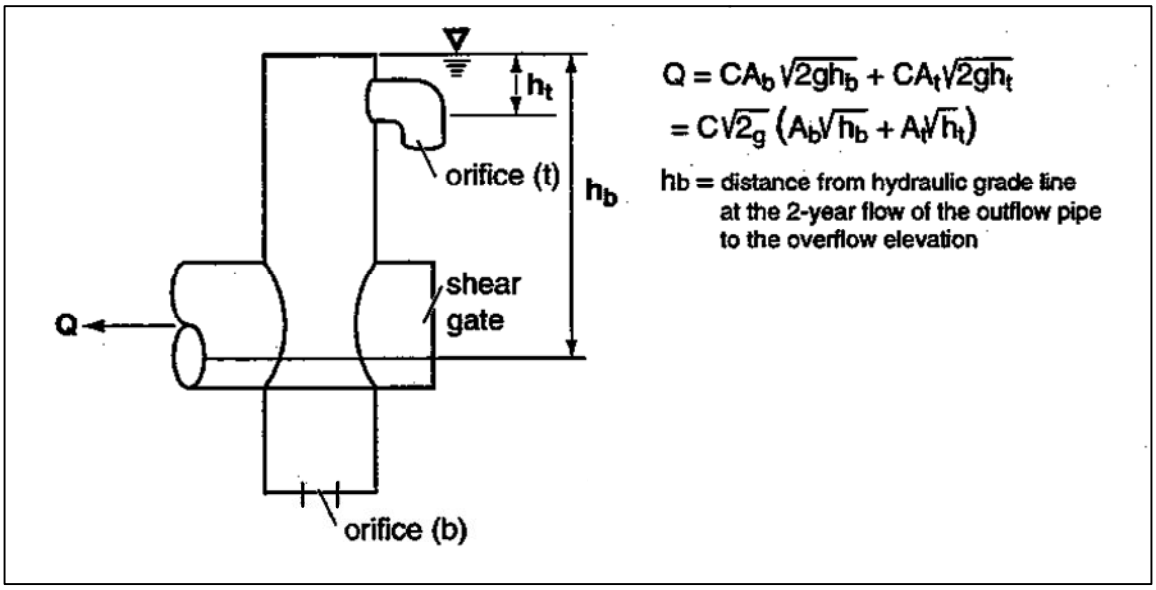

Figure III-2-18. Simple Orifice

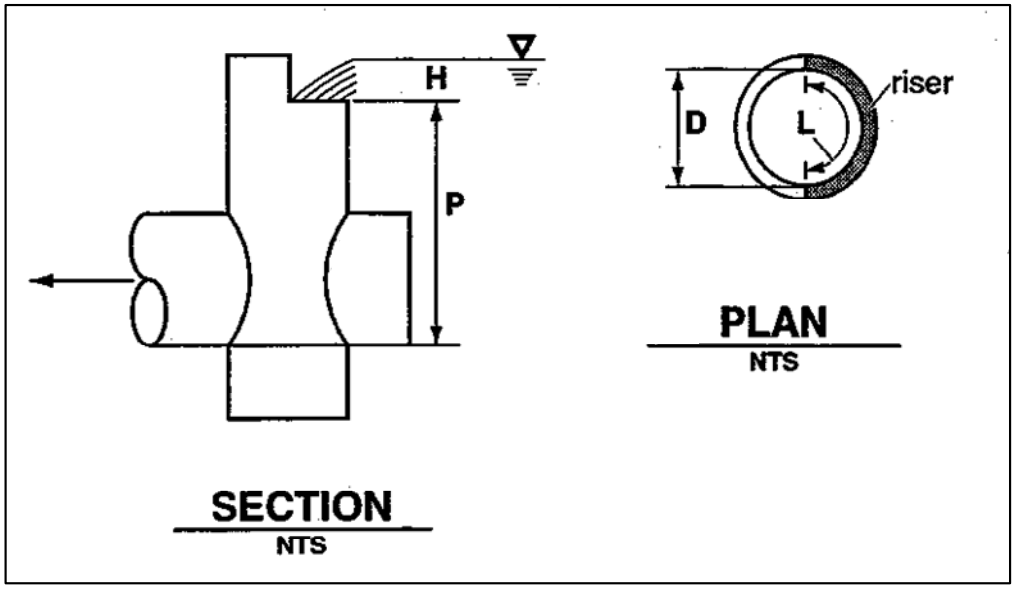

Figure III-2-19. Rectangular, Sharp-Crested Weir

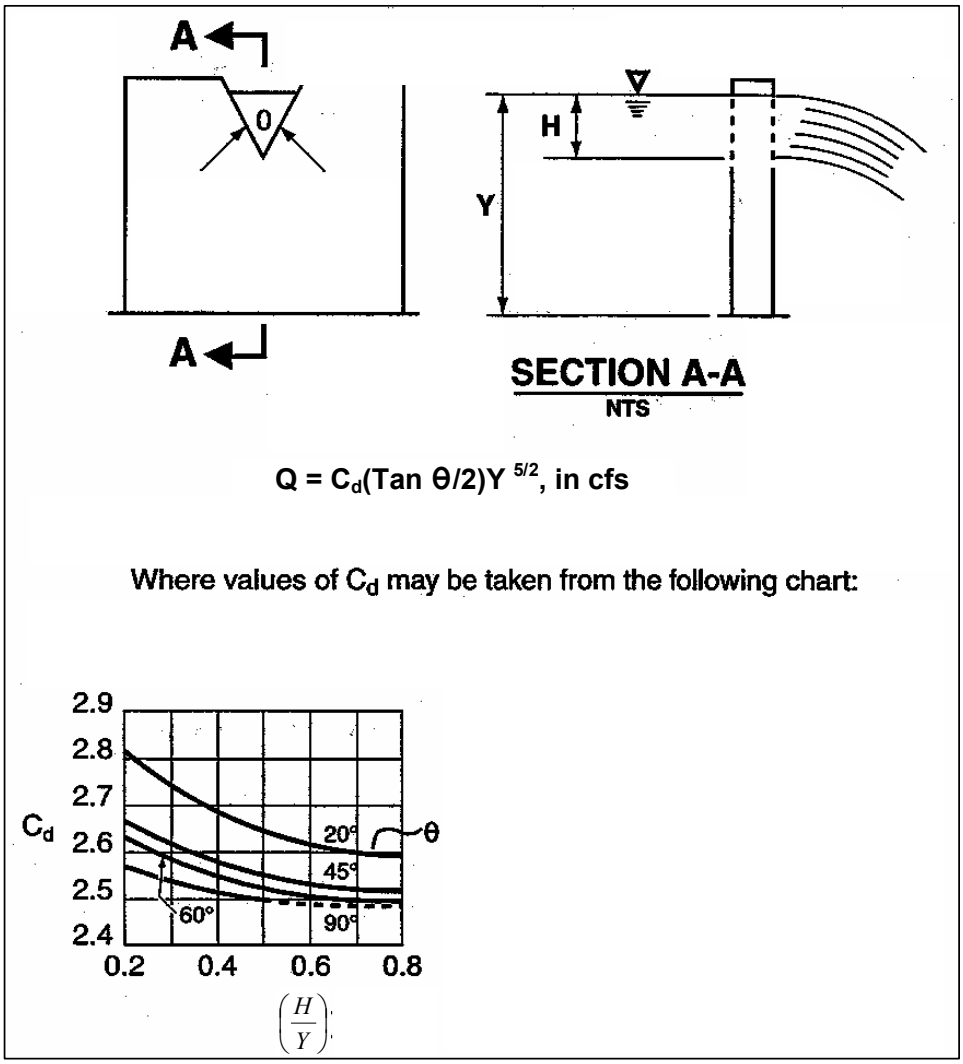

Figure III-2-20. V-Notch, Sharp-Crested Weir

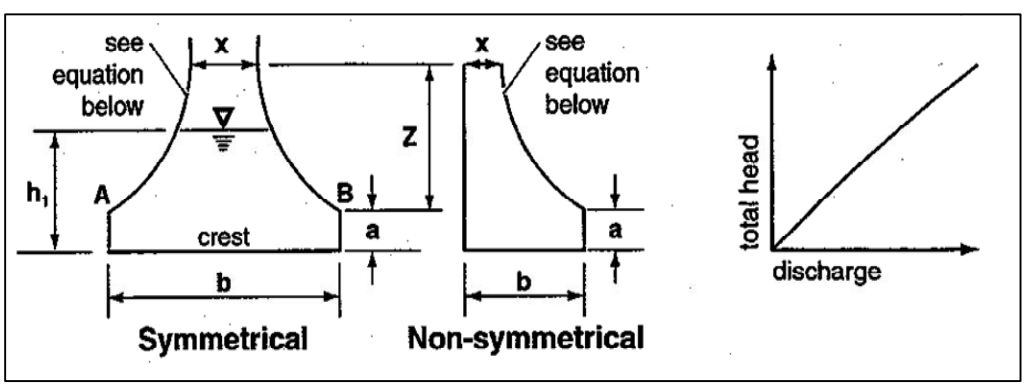

Figure III-2-21. Sutro Weir

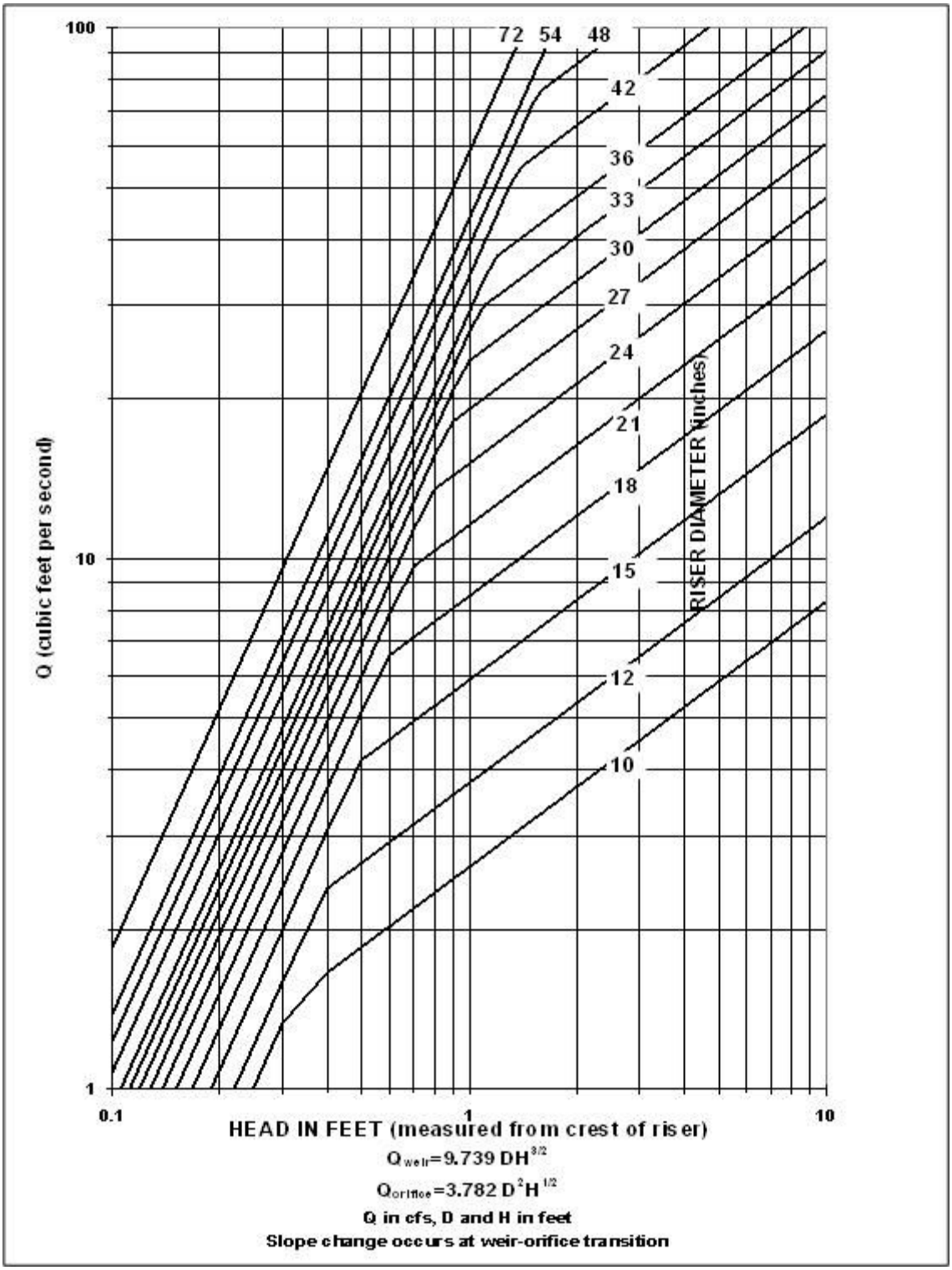

Figure III-2-22. Riser Inflow Curves

2.3.5 Other Detention Options

This section presents other design options for detaining flows to meet flow control facility requirements.

Use of Parking Lots for Additional Detention

Private parking lots may be used to provide additional detention volume for runoff events greater than the 2-year runoff event provided all of the following are met:

- The depth of water detained does not exceed 0.5 feet (6 inches) at any location in the parking lot for runoff events up to and including the 100-year event.
- The gradient of the parking lot area subject to ponding is 1 percent or greater.
- The emergency overflow path is identified and noted on the engineering plan. The overflow must not create a significant adverse impact to downhill properties or drainage system.
- Fire lanes be used for emergency equipment are free of ponding water for all runoff events up to and including the 100-year event.
- The overflow elevation shall be a minimum of one foot (1') below the finish floor elevation of adjacent building, adjacent properties, landscaping and parking stalls.
- At no time shall parking lot ponding encroach on walking paths, sidewalks, or American Disabilities Act (A.D.A) required parking stalls or adjacent A.D.A. access.

Use of Roofs for Detention

Detention ponding on roofs of structures may be used to meet flow control requirements provided all of the following are met:

- The roof support structure is analyzed by a structural engineer to address the weight of ponded water and meets the requirements of the applicable building code.
- The roof area subject to ponding is sufficiently waterproofed to achieve a minimum service life of 30 years.
- The minimum pitch of the roof area subject to ponding is 1/4-inch per foot.
- An overflow system is included in the design to safely convey the 100-year peak flow from the roof.
- A mechanism is included in the design to allow the ponding area to be drained for maintenance purposes, or in the event the restrictor device is plugged.

Chapter 3 Conveyance System Design and Hydraulic Analysis

This chapter presents acceptable methods for the analysis and design of storm and surface water conveyance systems. Conveyance systems can be separated into the following categories:

- Pipe systems
- Culverts
- Open Channels (ditches, swales)
- Outfalls

Pipe systems, culverts, and open channels are addressed in Section 3.4. Outfalls are addressed in Section 3.5.

The purpose of a conveyance system is to drain surface water, up to a specific design flow, from properties so as to provide protection to property and the environment. This chapter contains detailed design criteria, methods of analysis and standard details for all components of a conveyance system. A complete basic understanding of hydrology and hydraulics and the principles on which the methodology of hydrologic analysis is based is essential for the proper and accurate application of methods used in designing conveyance systems.

- A minimum of ten (10') shall be provided between the centerline of the conveyance and any property line or obstruction that would impede maintenance.

- Where storm drainage is directed against a curb, the curb shall be either a concrete curb and gutter or concrete vertical curb. An extruded curb or asphalt wedge section in any form will not be allowed.

3.1 Conveyance System Analysis Requirements

The project engineer shall provide calculations demonstrating the adequacy of all the project's existing and proposed surface water conveyance system components. The project engineer shall provide calculations regarding all off-site flows as required by Volume I. All relevant work/calculations shall be submitted for City review as part of a permit submittal. Small and/or isolated storm system (detention and water quality treatment) designs shall address how they will be incorporated into larger drainage systems likely to be built in the future. For example, site specific frontage and half street improvement designs shall also use a corridor analysis approach to ensure that they can be incorporated into larger future storm systems.

3.1.1 On-site Analysis

All proposed on-site surface water conveyance systems shall be sized to meet the required design event per Section 3.2.

3.1.2 Offsite Analysis (1/4 mile Downstream Analysis)

Refer to Minimum Requirement #10 (Offsite Analysis and Mitigation) in Volume I to determine whether a downstream analysis is required for a specific project. All projects shall complete a qualitative downstream analysis. A quantitative analysis shall be required as described in Minimum Requirement #10.

The engineer must field survey all existing storm drainage systems downstream from the project for a minimum of ¼ mile from the point of connection to the existing public drainage system, unless a City-identified trunk-line is encountered. The goal of the inspection and analysis is to evaluate whether the capacity of the drainage system(s) is adequate to handle the existing flows, flows generated by the proposed project, and any overflow. Adequacy will be evaluated based on conveyance capacity, flooding problems, erosion damage or potential, amount of freeboard in channels and pipes, and storage potential within the system. **All existing and proposed off-site surface water conveyance systems shall be sized to convey flows from the required design storm event per Section 3.2.**

The offsite analysis may be stopped shorter than the required ¼-mile downstream if the analysis reaches a City identified trunk line. Storm drainage pipes greater than or equal to 36 inches in diameter are generally considered trunk lines. However, where minimal grades (less than 0.5%) necessitated the use of a larger pipe to maintain flows, the City may not consider a pipe greater than or equal to 36 inches as a trunk line. Contact the City for final determination of whether a storm drainage pipe is a trunk line.

If a capacity problem or streambank erosion problem is encountered, the flow durations from the project will be restricted per Minimum Requirement #7 – Flow Control. The design shall meet the requirements of Chapter 2 of this volume. For projects that do not meet the thresholds of Minimum Requirement #7, and are therefore not required to provide flow control by the Department of Ecology, the project proponent may be allowed to correct the downstream problem instead of providing on-site flow control.

3.2 Design Event

The design events for all existing and new conveyance systems are as follows:

- All private pipe systems less than 24 inches in diameter shall be designed to convey at minimum the 10-year, 24-hour peak flow rate without surcharging (the water depth in the pipe must not exceed 90% of the pipe diameter).
- All private pipe systems greater than or equal to 24-inches in diameter and all public pipe systems shall be designed to convey the 25-year, 24-hour peak flow rate without surcharging (the water depth in the pipe must not exceed 90% of the pipe diameter).
- Culverts shall convey the 25-year, 24-hour peak flow rate without submerging the culvert inlet (i.e. $HW/D \leq 1$).
- Constructed and natural channels shall contain the 100-year, 24-hour storm event.

3.2.1 Additional Design Criteria

- For the 100-year event, overtopping of the pipe conveyance system may occur. However, the additional flow shall not extend beyond half the lane width of the outside lane of the traveled way and shall not exceed 4 inches in depth at its deepest point.
- All conveyance systems shall be designed for fully developed conditions. The fully developed conditions for the project site shall be derived from the percentages of proposed and existing impervious area. For off-site tributary areas, typical percentages of impervious area for fully developed conditions are provided in Table III-3-13.
- Conveyance systems shall be modeled as if no on-site detention is provided upstream.

Table III-3-13. Percentage Impervious for Fully Developed Conditions Offsite Tributary Areas

Land Use Description	Percentage Impervious
Commercial/Industrial	85%
Residential	65%

3.3 Methods of Analysis

Proponent site surveys shall be used as the basis for determining the capacity of existing systems. For preliminary analyses only, the proponent may use City of Auburn drainage maps and record drawings. For naturally occurring drainage systems, drainage ditches, or undeveloped drainage courses, the engineer must take into account the hydraulic capacity of the existing drainage course and environmental considerations such as erosion, siltation, and increased water velocities or water depths.

Describe capacities, design flows, and velocities in each reach. Describe required materials or specifications for the design (e.g. rock lined for channels when velocity is exceeded; high density polyethylene pipe needed for steep slope). Comprehensive maps showing the flow route and basins for both the on-site and off-site surface water (for the minimum 1/4 mile downstream distance) must be included in the storm drainage calculations.

If hydrologic modeling is required, the Project Engineer shall state methods, assumptions, model parameters, data sources, and all other relevant information to the analysis. If model parameters are used that are outside the standards of practice, or if parameters are different than those standards, justify the parameters. Copies of all calculations for capacity of channels, culverts, drains, gutters and other conveyance systems shall be included with the Stormwater Site Plan. If used, include all standardized graphs and tables and indicate how they were used. Show headwater and tailwater analysis for culverts when necessary. Provide details on references and sources of information used. Single event modeling shall be used for designing conveyance systems, WWHM is not accepted.

For a full description of the information required for preparing a Stormwater Site Plan consult Volume I, Chapter 4.

3.3.1 Rational Method

This method shall only be used for preliminary pipe sizing and capacity analysis. For flow control sizing derivations and water quality treatment sizing and flows see Chapter 2 of this volume and Chapter 3 of Volume V.

The Rational Method is a simple, conservative method for analyzing and sizing conveyance elements serving small drainage sub-basins, subject to the following specific limitations:

- Only for use in predicting peak flow rates for sizing conveyance elements **(not for use in sizing flow control or treatment facilities)**
- Drainage sub-basin area, *A*, cannot exceed 10 acres for a single peak flow calculation
- The time of concentration, T_c, must be computed using the method described below and cannot exceed 100 minutes. A minimum T_c of 6.3 minutes shall be used.
- Unlike other methods of computing times of concentration, the 6.3 minutes is not an initial collection time to be added to the total computed time of concentration.

3.3.1.1 Rational Method Equation

The following is the traditional Rational Method equation:

$$Q_R = CI_RA \qquad \text{(equation 1)}$$

Where Q_R = peak flow (cfs) for a storm of return frequency R

C = estimated runoff coefficient (ratio of rainfall that becomes runoff)

I_R = peak rainfall intensity (inches/hour) for a storm of return frequency R

A = drainage sub-basin area (acres)

When the composite runoff coefficient, C_c (see equation 2) of a drainage basin exceeds 0.60, the T_c and peak flow rate from the impervious area should be computed separately. The computed peak rate of flow for the impervious surface alone may exceed that for the entire drainage basin using the value at T_c for the total drainage basin. The higher of the two peak flow rates shall then be used to size the conveyance element.

"C" Values

The allowable runoff coefficients to be used in this method are shown in Table III-3-14 by type of land cover. These values were selected following a review of the values previously accepted by the City for use in the Rational Method and as described in several engineering handbooks. The value for single family residential areas were computed as composite values (as illustrated in the following equation) based on the estimated percentage of coverage by roads, roofs, yards, and unimproved areas for each density. For drainage basins containing several land cover types, the following formula may be used to compute a composite runoff coefficient, C_c:

$$C_c = (C_1A_1+C_2A_2+\ldots+C_nA_n)/A_t \qquad \text{(equation 2)}$$

Where A_t = total area (acres)

$A_{1,2\ldots n}$ = areas of land cover types (acres)

$C_{1,2\ldots n}$ = runoff coefficients for each area land cover type

Table III-3-14. Runoff Coefficients – "C" Values for the Rational Method

GENERAL LAND COVERS			
LAND COVER	**C**	**LAND COVER**	**C**
Dense forest	0.10	Playgrounds	0.30
Light forest	0.15	Gravel areas	0.80
Pasture	0.20	Pavement and roofs	0.90
Lawns	0.25	Open water (pond, lakes, wetlands)	1.00
SINGLE FAMILY RESIDENTIAL AREAS* ***[Density is in dwelling units per gross acreage (DU/GA)]***			
LAND COVER DENSITY	**C**	**LAND COVER DENSITY**	**C**
0.20 DU/GA (1 unit per 5 ac.)	0.17	3.00 DU/GA	0.42
0.40 DU/GA (1 unit per 2.5 ac.)	0.20	3.50 DU/GA	0.45
0.80 DU/GA (1 unit per 1.25 ac.)	0.27	4.00 DU/GA	0.48
1.00 DU/GA	0.30	4.50 DU/GA	0.51
1.50 DU/GA	0.33	5.00 DU/GA	0.54
2.00 DU/GA	0.36	5.50 DU/GA	0.57
2.50 DU/GA	0.39	6.00 DU/GA	0.60

*Based on average 2,500 square feet per lot of impervious coverage.

For combinations of land covers listed above, an area-weighted "C_c x A_t" sum should be computed based on the equation $C_c \times A_t = (C_1 \times A_1)+(C_2 \times A_2)\ldots(C_n \times A_n)$, where $A_t = (A_1+A_2\ldots A_n)$, the total drainage basin area

"I_R" Peak Rainfall Intensity

The peak rainfall intensity, I_R, for the specified design storm of return frequency *R* is determined using a unit peak rainfall intensity factor, i_R, in the following equation:

$$I_R = (P_R)(i_R) \qquad \text{(equation 3)}$$

Where P_R = the total precipitation at the project site for the 24-hour duration storm event for the given return frequency. Refer to Table III-3-15 for P_R values. Total precipitation can also be found in Chapter 1 of Volume III.

i_R = the unit peak rainfall intensity factor

The unit peak rainfall intensity factor, i_R, is determined by the following equation:

$$i_R = (a_R)(T_c)^{(-bR)} \qquad \text{(equation 4)}$$

Where T_c = time of concentration (minutes), calculated using the method described below and subject to equation limitations ($6.3 < Tc < 100$)

a_R, b_R = coefficients from Table III-3-15 used to adjust the equation for the design storm return frequency R

Table III-3-16 includes a table of rainfall intensity as a function of time of concentration, calculated using the coefficients from Table III-3-15.

Table III-3-15. Coefficients for the Rational Method

Design Storm Frequency	P_R *(inches)*	a_R	b_R
2 years	2.0	1.58	0.58
5 years	2.5	2.33	0.63
10 years	3.0	2.44	0.64
25 years	3.5	2.66	0.65
50 years	3.5	2.75	0.65
100 years	4.0	2.61	0.63

Table III-3-16. Rainfall Intensities for the City of Auburn

	Rainfall Intensity (I_R) (inches per hour)					
	Design storm recurrence interval (probability)					
Time of Concentration (min)	2-year (50%)	5-year (20%)	10-year (10%)	25-year (4%)	50-year (2%)	100-year (1%)
6.3	1.09	1.83	2.25	2.81	2.91	3.27
7	1.02	1.71	2.11	2.63	2.72	3.06
8	0.95	1.57	1.93	2.41	2.49	2.82
9	0.88	1.46	1.79	2.23	2.31	2.62
10	0.83	1.37	1.68	2.08	2.15	2.45
11	0.79	1.29	1.58	1.96	2.03	2.30
12	0.75	1.22	1.49	1.85	1.91	2.18
13	0.71	1.16	1.42	1.76	1.82	2.07
14	0.68	1.10	1.35	1.67	1.73	1.98
15	0.66	1.06	1.29	1.60	1.66	1.90
16	0.63	1.02	1.24	1.54	1.59	1.82
17	0.61	0.98	1.19	1.48	1.53	1.75
18	0.59	0.94	1.15	1.42	1.47	1.69
19	0.57	0.91	1.11	1.37	1.42	1.63
20	0.56	0.88	1.08	1.33	1.37	1.58
25	0.49	0.77	0.93	1.15	1.19	1.37
30	0.44	0.68	0.83	1.02	1.06	1.22
35	0.40	0.62	0.75	0.92	0.95	1.11
40	0.37	0.57	0.69	0.85	0.88	1.02
45	0.35	0.53	0.64	0.78	0.81	0.95
50	0.33	0.50	0.60	0.73	0.76	0.89
55	0.31	0.47	0.56	0.69	0.71	0.84
60	0.29	0.44	0.53	0.65	0.67	0.79
70	0.27	0.40	0.48	0.59	0.61	0.72
80	0.25	0.37	0.44	0.54	0.56	0.66
90	0.23	0.34	0.41	0.50	0.52	0.61
100	0.22	0.32	0.38	0.47	0.48	0.57

"T_c" Time of Concentration

The time of concentration is defined as the time it takes runoff to travel overland (from the onset of precipitation) from the most hydraulically distant location in the drainage basin to the point of discharge.

Due to the mathematical limits of the equation coefficients, values of T_c less than 6.3 minutes or greater than 100 minutes cannot be used. Therefore, real values of T_c less than 6.3 minutes must be assumed to be equal to 6.3 minutes, and values greater than 100 minutes must be assumed to be equal to 100 minutes.

T_c is computed by summation of the travel times T_t of overland flow across separate flowpath segments. The equation for time of concentration is:

$$T_c = T_1 + T_2 + \ldots + T_n \qquad \text{(equation 5)}$$

Where $T_{1,2\ldots n}$ = travel time for consecutive flowpath segments with different categories or flowpath slope

Travel time for each segment, *t*, is computed using the following equation:

$$T_t = L/60V \qquad \text{(equation 6)}$$

where T_t = travel time (minutes)

T_t through an open water body (such as a pond) shall be assumed to be zero with this method.

T_t = Travel time for each segment (ft)

L = the distance of flow across a given segment (feet)

V = average velocity (ft/s) across the land cover = $k_R\sqrt{s_o}$

Where k_R = time of concentration velocity factor; see Table III-3-17.

s_0 = slope of flowpath (feet/feet)

Table III-3-17. "n" and "k" Values Used in Time Calculations for Hydrographs

"n_s" Sheet Flow Equation Manning's Values (for the initial 300 ft. of travel)	
Manning values for sheet flow only, from Overton and Meadows 1976[1]	**n_s**
Smooth surfaces (concrete, asphalt, gravel, or bare hand packed soil)	0.011
Fallow fields or loose soil surface (no residue)	0.05
Cultivated soil with residue cover ≤20%	0.06
Cultivated soil with residue cover >20%	0.17
Short prairie grass and lawns	0.15
Dense grasses	0.24
Bermuda grass	0.41
Range (natural)	0.13
Woods or forest with light underbrush	0.40
Woods or forest with dense underbrush	0.80
"k" Values Used in Travel Time/Time of Concentration Calculations[2]	
Sheet Flow	**k_R**
Forest with heavy ground litter and meadow	2.5
Fallow or minimum tillage cultivation	4.7
Short grass pasture and lawns	7.0
Nearly bare ground	10.1
Grasses waterway	15.0
Paved area (sheet flow) and shallow gutter flow	20.0
Shallow Concentrated Flow (After the initial 300 ft. of sheet flow, R = 0.1)	**k_s**
1. Forest with heavy ground litter and meadows (n = 0.10)	3
2. Brushy ground with some trees (n= 0.060)	5
3. Fallow or minimum tillage cultivation (n = 0.040)	8
4. High grass (n = 0.035)	9
5. Short grass, pasture and lawns (n = 0.030)	11
6. Nearly bare ground (n = 0.025)	13
7. Paved and gravel areas (n = 0.012)	27
Channel Flow (intermittent) (At the beginning of visible channels R = 0.2)	**k_c**
1. Forested swale with heavy ground litter (n = 0.10)	5
2. Forested drainage course/ravine with defined channel bed (n = 0.050)	10
3. Rock-lined waterway (n = 0.035)	15
4. Grassed waterway (n = 0.030)	17
5. Earth-lined waterway (n = 0.025)	20
6. CMP pipe, uniform flow (n = 0.024)	21
7. Concrete pipe, uniform flow (0.012)	42
8. Other waterways and pipe	0.508/n
Channel Flow (Continuous stream, R = 0.4)	**k_c**
9. Meandering stream with some pools (n = 0.040)	20
10. Rock-lined stream (n = 0.035)	23
11. Grass-lined stream (n = 0.030)	27
12. Other streams, man-made channels and pipe	0.807/n

[1] See TR-55, 1986
[2] 210-VI-TR-55, Second Ed., June 1986

3.4 Pipes, Culverts and Open Channels

This section presents the methods, criteria and details for analysis and design of pipe systems, culverts, and open channel conveyance systems.

Storm drainage conveyance for public street requirements are as follows:

- Maximum surface run without considering curve super elevation (gutter flow) between catch basins on paved roadway surfaces shall be as follows:

Pavement Slope, %	Maximum Flow Length, ft
0.5 – 1	200
1 to 6	300
6 to 12	200

- The minimum longitudinal street gutter slope shall be one/half percent (0.5%).V
- Vaned catch basin grates and through-curb inlets may be required for roadway grades in excess of six percent (6%).
- Storm manholes or catch basins shall not be designed within the vehicular wheel paths.
- The design of street drainage conveyance should seek to minimize the number of structures and redundant pipes.

3.4.1 Pipe Systems

Pipe systems are networks of storm drain pipes, catch basins, manholes, inlets, and outfalls, designed and constructed to convey surface water. The hydraulic analysis of flow in storm drainage pipes typically is limited to gravity flow; however in analyzing existing systems it may be necessary to address pressurized conditions. A properly designed pipe system will maximize hydraulic efficiency by utilizing proper material, slope, and pipe size.

3.4.1.1 Design Flows

Design flows for sizing or assessing the capacity of pipe systems shall be determined using the hydrologic analysis methods described in this chapter. Approved single event models described in Chapter 1 of this volume may also be used to determine design flows. The design event is described in Section 3.2. Pipe systems shall be designed to convey the design event without surcharging (water depth in pipe shall not exceed 90% of the pipe diameter).

3.4.1.2 Conveyance Capacity

Two methods of hydraulic analysis using Manning's Equation are required by the City of Auburn for the analysis of pipe systems. First, the **Uniform Flow Analysis** method is used for preliminary design and analysis of pipe systems. Second, the **Backwater Analysis** method is used to analyze both proposed and existing pipe systems to verify adequate capacity. See Section 3.2 for the required design events for pipe systems.

Uniform Flow Analysis

This method is typically used for preliminary sizing of new pipe systems to convey the design flow as calculated from the required design event from Section 3.2.

Assumptions:

- Flow is uniform in each pipe (i.e., depth and velocity remain constant throughout the pipe for a given flow).
- Friction head loss in the pipe barrel alone controls capacity. Other head losses (e.g., entrance, exit, junction, etc.) and any backwater effects or inlet control conditions are not specifically addressed.
- All pipes shall be designed for fully developed conditions. The fully developed conditions shall be derived from the percentages of impervious area provided in Table III-3-18.

Table III-3-18. Percentage Impervious for Modeling Fully Developed Conditions

Land Use Description[1]	% Impervious
Commercial/Industrial	85
Residential	65

[1] For the land use descriptions, roads are included in the percentage impervious.

- All pipes shall be modeled as if no on-site detention is provided up-stream.

Each pipe within the system shall be sized and sloped such that **its barrel capacity at normal full flow** is equal to or greater than the design flow calculated from the appropriate design storm as identified in Section 3.2. The nomographs in Figure III-3-23 can be used for approximate sizing of the pipes or Manning's Equation can be solved for pipe size directly:

$$V = \frac{1.49}{n} R^{2/3} S^{1/2} \qquad \text{(equation 7)}$$

or use the continuity equation, $Q = A \cdot V$, such that

$$Q = \frac{1.49}{n} A R^{2/3} S^{1/2} \qquad \text{(equation 8)}$$

Where Q = discharge (cfs)

V = velocity (fps)
A = area (sf)
n = Manning's roughness coefficient; see Table III-3-19
R = hydraulic radius = area/wetted perimeter
S = slope of the energy grade line (ft/ft)

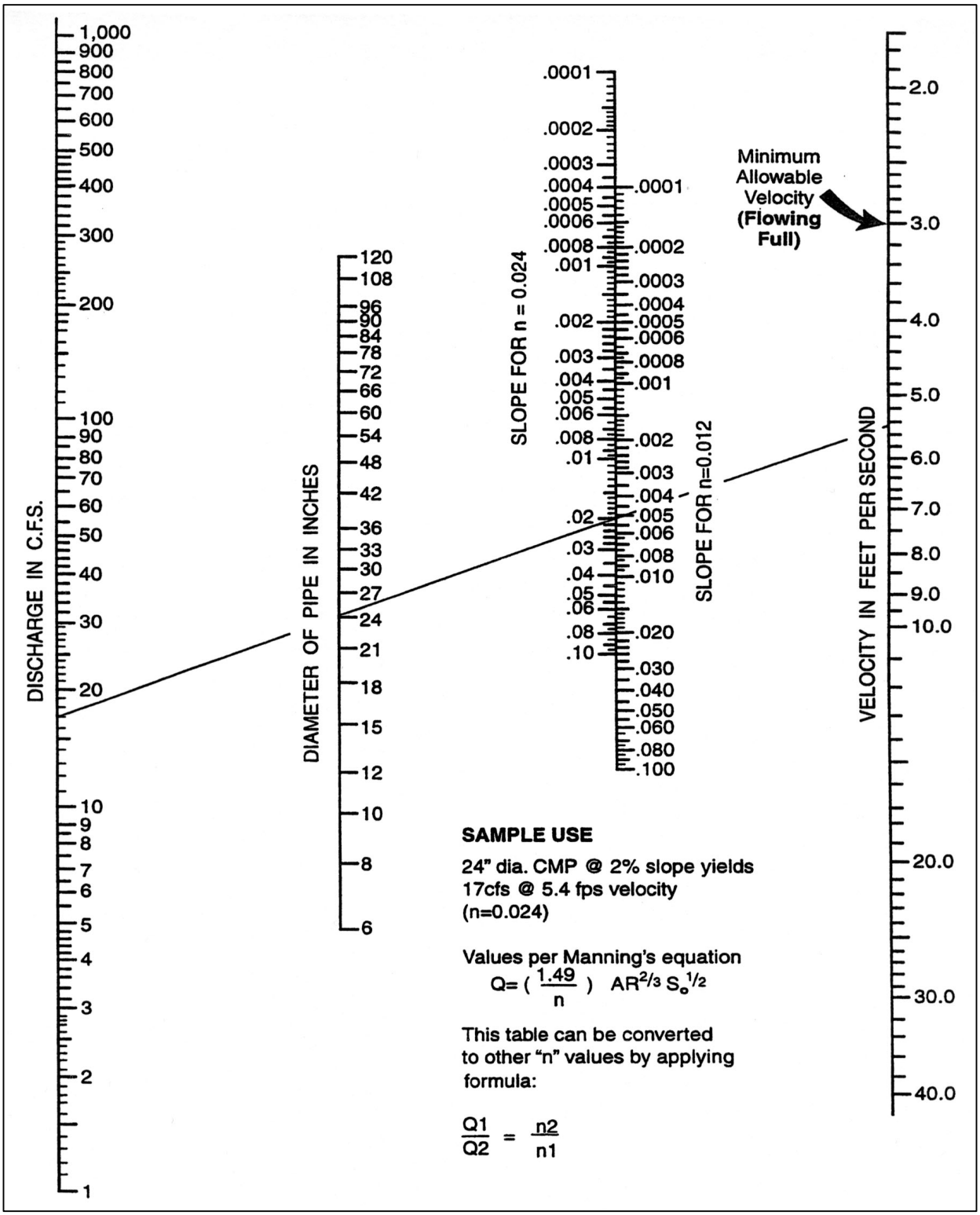

Figure III-3-23. Nomograph for Sizing Circular Drains Flowing Full

Table III-3-19. Manning's "n" Values for Pipes

Type of Pipe Material		Analysis Method	
		Backwater Flow	**Manning's Equation Flow**
A.	Concrete pipe and CPEP-smooth interior pipe	0.012	0.014
B.	Annular Corrugated Metal Pipe or Pipe Arch:		
	1. 2-2/3" x 1/2" corrugation (riveted)		
	a. plain or fully coated	0.024	0.028
	b. paved invert (40% of circumference paved):		
	(1) flow full depth	0.018	0.021
	(2) flow 0.8 depth	0.016	0.018
	(3) flow 0.6 depth	0.013	0.015
	c. treatment	0.013	0.015
	2. 3" x 1" corrugation	0.027	0.031
	3.6" x 2" corrugation (field bolted)	0.030	0.035
C.	Helical 2-2/3" x 1/2" corrugation and CPEP-single wall	0.024	0.028
D.	Spiral rib metal pipe and PVC pipe	0.011	0.013
E.	Ductile iron pipe cement lined	0.012	0.014
F.	High density polyethylene pipe (butt fused only)	0.009	0.009

For **pipes flowing partially full**, the actual velocity may be estimated from the hydraulic properties shown in Figure III-3-24 by calculating Q_{full} and V_{full} and using the ratio of Q_{design}/Q_{full} to find V and d (depth of flow).

Table III-3-19 provides the recommended Manning's "n" values for preliminary design for pipe systems. The "n" values for this method are 15% higher in order to account for entrance, exit, junction, and bend head losses.

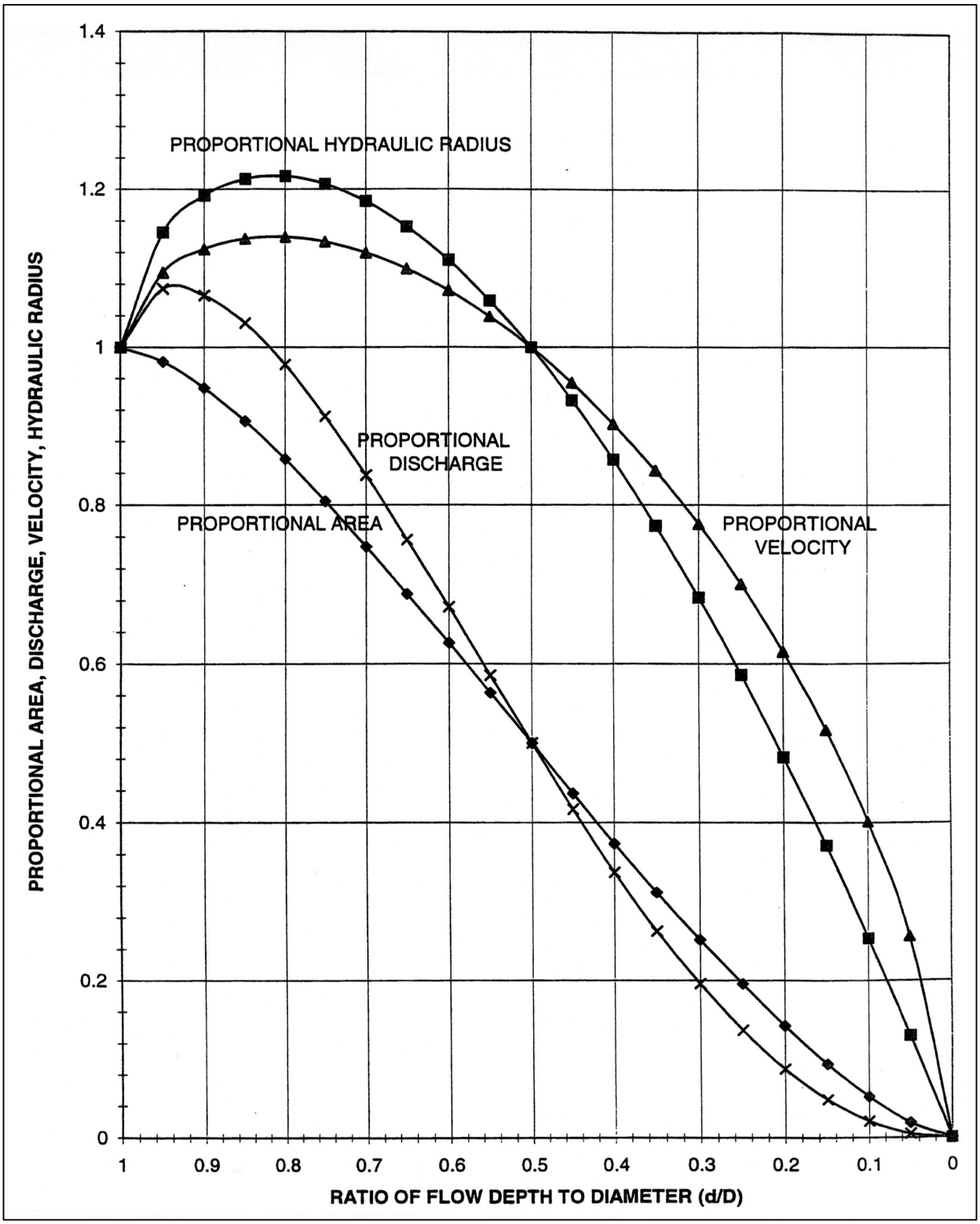

Figure III-3-24. Circular Channel Ratios

3.4.1.3 Backwater Analysis

A backwater analysis shall be required when the design depth of flow is greater than 90% of the pipe inside diameter or as directed by the City. The backwater analysis method described in this section is used to analyze the capacity of both proposed and existing pipe systems to convey the required design flow (i.e., either the 10-year or 25-year peak flow as required in Section 3.2). The backwater analysis shall verify that the pipe system meets the following conditions:

- For the 25-year event, there shall be a minimum of 0.5 feet of freeboard between the water surface and the top of any manhole or catch basin.
- For the 100-year event, overtopping of the pipe conveyance system may occur, however, the additional flow shall not extend beyond half the lane width of the outside lane of the traveled way and shall not exceed 4 inches in depth at its deepest point. Refer to the Washington State Department of Transportation (WSDOT) Hydraulics Manual for pavement drainage calculations. Off-channel storage on private property is allowed with recording of the proper easements. When this occurs, the additional flow over the ground surface is analyzed using the methods for open channels described in Sections 3.2 and 3.4.3 and added to the flow capacity of the pipe system.

This method is used to compute a simple backwater profile (hydraulic grade line) through a proposed or existing pipe system for the purposes of verifying adequate capacity. It incorporates a re-arranged form of Manning's equation expressed in terms of friction slope (slope of the energy grade line in ft/ft). The friction slope is used to determine the head loss in each pipe segment due to barrel friction, which can then be combined with other head losses to obtain water surface elevation at all structures along the pipe system.

The backwater analysis begins at the downstream end of the pipe system and is computed back through each pipe segment and structure upstream. The friction, entrance, and exit head losses computed for each pipe segment are added to that segment's tailwater elevation (the water surface elevation at the pipes' outlet) to obtain its outlet control headwater elevation. This elevation is then compared with the inlet control headwater elevation, computed assuming the pipe's inlet alone is controlling capacity using the methods for inlet control presented in Section 3.4.2. The condition that creates the highest headwater elevation determines the pipe's capacity. The approach velocity head is then subtracted from controlling headwater elevation, and the junction and bend head losses are added to compute the total headwater elevation, which is then used as the tailwater elevation for the upstream pipe segment.

The Backwater Calculation Sheet in Figure III-3-25 can be used to compile the head losses and headwater elevations for each pipe segment. The numbered columns on this sheet are described in Table III-3-20. An example calculation is performed in Figure III-3-26.

This method should not be used to compute stage/discharge curves for level pool routing purposes. See Volume III, Chapter 2 for level pool routing.

Pipe Segment CB to CB	(1) Q (cfs)	(2) Lngth (ft)	(3) Pipe Size	(4) "n" Value	(5) Outlet Elev (ft)	(6) Inlet Elev (ft)	(7) Barrel Area (sq. ft)	(8) Barrel Vel (fps)	(9) Barrel Vel Head (ft)	(10) TW Elev (ft)	(11) Fric-tion Loss (ft)	(12) Entr HGL Elev (ft)	(13) Entr Head Loss (ft)	(14) Exit Head Loss (ft)	(15) Outlt Cntrl Elev (ft)	(16) Inlet Cntrl Elev (ft)	(17) Appr Vel Head (ft)	(18) Bend Head Loss (ft)	(19) Junc Head Loss (ft)	(20) HW Elev (ft)

Figure III-3-25. Backwater Calculation Sheet

Table III-3-20. Backwater Calculation Sheet Notes

Column	Description
(1)	Design flow to be conveyed by pipe segment.
(2)	Length of pipe segment.
(3)	Pipe size: indicate pipe diameter or span % rise.
(4)	Manning's *"n"* value.
(5)	Outlet Elevation of pipe segment.
(6)	Inlet Elevation of pipe segment.
(7)	Barrel Area: this is the full cross-sectional area of the pipe.
(8)	Barrel Velocity: this is the full velocity in the pipe as determined by: $V = Q/A$ or Col. (8) = Col. (1)/Col. (7)
(9)	Barrel Velocity Head = $V^3/2g$ or $(\text{Col. (8)})^2/2g$; Where g = 32.2 ft./sec.^{2} (acceleration due to gravity)
(10)	Tailwater (*TW*) Elevation: this is the water surface elevation at the outlet of the pipe segment. If the pipe's outlet is not submerged by the TW and the TW depth is less than $D+d_c)/2$, set TW equal to $D+d_c)/2$ to keep the analysis simple and still obtain reasonable results (D=pipe barrel height and d_c=critical depth, both in feet. See Figure III-3-33 for determination of d_c.
(11)	Friction Loss = $S_f \times L$ (or S_f X Col (2)); Where S_f is the friction slope or head loss per linear foot of pipe as determined by Manning's equation expressed in the form: $S_f = (nV)^2/2.22R^{1.33}$
(12)	Hydraulic Grade Line (HGL) Elevation just inside the entrance of the pipe barrel; this is determined by adding the friction loss to the TW elevation: Col. (12) = Col. (11) + (Col. (10) If this elevation falls below the pipe's inlet crown, it no longer represents the true HGL when computed in this manner. The true HGL will fall somewhere between the pipe's crown and either normal flow depth or critical flow depth, whichever is greater. To keep the analysis simple and still obtain reasonable results (i.e. erring on the conservative side), set the HGL elevation equal to the crown elevation.
(13)	Entrance Head Loss = $K_e/2g$ (or K_e x Col (9)) Where K_e = Entrance Loss Coefficient from Table III-3-24. This is the head lost due to flow contractions at the pipe entrance.
(14)	Exit Head Loss = 1.0 x $V^2/2g$ or 1.0 x Col. (9); This is the velocity head lost or transferred downstream.
(15)	Outdoor Control Elevation = Col. (12) + Col. (13) + Col. (14) This is the maximum headwater elevation assuming the pipe's barrel and inlet/outlet characteristics are controlling capacity. It does not include structure losses or approach velocity considerations.
(16)	Inlet Control Elevation (see Section 3.4.2.5 for computation of inlet control on culverts); this is the maximum headwater elevation assuming the pipe's inlet is controlling capacity. It does not include structure losses or approach velocity considerations.
(17)	Approach Velocity Head: This is the amount of head/energy being supplied by the discharge from an upstream pipe or channel section, which serves to reduce the headwater elevation. If the discharge is from a pipe, the approach velocity head is equal to the barrel velocity head computed for the upstream pipe. If the upstream pipe outlet is significantly higher in elevation (as in a drop manhole) or lower in elevation such that its discharge energy would be dissipated, an approach velocity head of zero should be assumed.
(18)	Bend Head Loss = $K_b \times V^2/2g$ (or K_b x Col. (17)); Where K_b = Bend Loss Coefficient (from Figure III-3-32). This is due to loss of head/energy required to change direction of flow in an access structure.
(19)	Junction Head Loss: This is the loss in head/energy which results from the turbulence created when two or more streams are merged into one within the access structure. Figure III-3-30 can be used to determine this loss, or it an be computed using the following equations derived from Figure III-3-30: Junction Head Loss = $K_j \times V^2/2g$ (or K_j x Col. (17) where K_j is the Junction Loss Coefficient determined by: $K_j = (Q^3/Q^1)/(1.18 + 0.63(Q^3/Q^1))$
(20)	Headwater (HW) Elevation: This is determined by combining the energy heads in Columns 17, 18, and 19 with the highest control elevation in either Column 15 or 16, as follows: Col. (20) = Col. (15 or 16) – Col. (17) + Col. (18) + Col. (19)

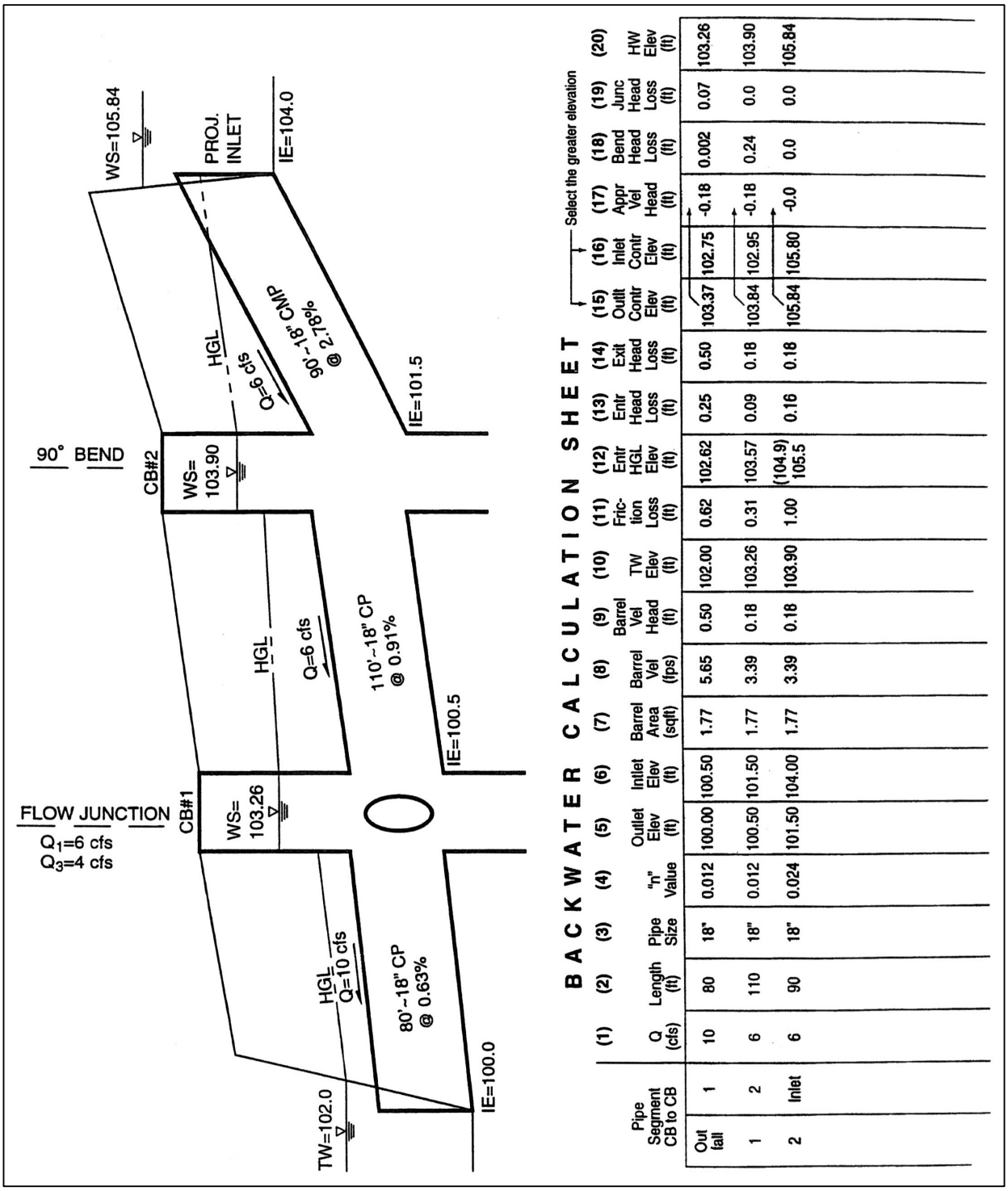

BACKWATER CALCULATION SHEET

Select the greater elevation

Pipe Segment CB to CB		(1) Q (cfs)	(2) Length (ft)	(3) Pipe Size	(4) "n" Value	(5) Outlet Elev (ft)	(6) Inlet Elev (ft)	(7) Barrel Area (sqft)	(8) Barrel Vel (fps)	(9) Barrel Vel Head (ft)	(10) TW Elev (ft)	(11) Fric-tion Loss (ft)	(12) Entr HGL Elev (ft)	(13) Entr Head Loss (ft)	(14) Exit Head Loss (ft)	(15) Outlt Contr Elev (ft)	(16) Inlet Contr Elev (ft)	(17) Appr Vel Head (ft)	(18) Bend Head Loss (ft)	(19) Junc Head Loss (ft)	(20) HW Elev (ft)
Out fall	1	10	80	18"	0.012	100.00	100.50	1.77	5.65	0.50	102.00	0.62	102.62	0.25	0.50	103.37	102.75	-0.18	0.002	0.07	103.26
1	2	6	110	18"	0.012	100.50	101.50	1.77	3.39	0.18	103.26	0.31	103.57	0.09	0.18	103.84	102.95	-0.18	0.24	0.0	103.90
2	Inlet	6	90	18"	0.024	101.50	104.00	1.77	3.39	0.18	103.90	1.00	(104.9) 105.5	0.16	0.18	105.84	105.80	-0.0	0.0	0.0	105.84

Figure III-3-26. Backwater Pipe Calculation Example

3.4.1.4 Inlet Grate Capacity

The *Washington State Department of Transportation (WSDOT) Hydraulics Manual* can be used in determining the capacity of inlet grates when capacity is of concern. When verifying capacity, assume:

- Grate areas on slopes are 80 percent free of debris, and "vaned" grates are 95 percent free.
- Grate areas in sags or low spots are 50 percent free of debris, and "vaned" grates, 75 percent free.

3.4.1.5 Pipe Materials

See City of Auburn Construction Standards Division 7 for pipe specifications.

3.4.1.6 Pipe Sizes

- The following pipe sizes shall be used for pipe systems to be maintained by the City of Auburn: 12-inch, 15-inch, 18-inch, 21-inch, 24-inch, 30-inch, 36-inch and 42-inch.
- Pipes smaller than 12-inch may only be used for privately maintained systems, or to match the diameter of existing downstream mains, or as approved in writing by the City.
- Catch basin leads shall be a minimum of 12-inch.
- Single-family home site roof, foundation and driveway drains may use pipe as small as 4 inch.
- Non-single family roof, foundation and small driveway drains may use pipe as small as 6-inch. Pipes under 10-inch may require capacity analysis if requested by the City.
- For pipes larger than 30-inch increasing increments of 6-inch intervals shall be used (36-inch, 42-inch, 48-inch, etc.).

3.4.1.7 Changes in Pipe Sizes

- Pipe direction changes or size increases or decreases are only allowed at manholes and catch basins.
- Where a minimal fall is necessary between inlet and outlet pipes in a structure, pipes must be aligned vertically by one of the following in order of preference:
  a. Match pipe crowns
  b. Match 80% diameters of pipes
  c. Match pipe inverts or use City approved drop inlet connection

3.4.1.8 Pipe Alignment and Depth

- Pipes must be laid true to line and grade with no curves, bends, or deflections in any direction.

Exception: *Vertical deflections in HDPE and ductile iron pipe with flanged restrained mechanical joint bends (not greater than 30%) on steep slopes are allowed provided the pipe adequately drains, with a minimum velocity of 2 feet per second (fps).*

- A break in grade or alignment or changes in pipe material shall occur only at catch basins or manholes.
- For the standard main alignment refer to the City's Engineering Design and Construction Standards.
- The standard depth for new mains measures six (6) feet from the center of the pipe to the main street surface.
- The project engineer shall consult with the City for the potential of a future extension of the storm system. In this case, the City may require modifications to the depth or alignment.
- Connections to the main shall be at 90°. Slight variations may be allowed.
- Pipes shall be allowed to cross under retaining walls as specifically approved in writing by the City when no other reasonable alternatives exist.

3.4.1.9 Pipe Slopes and Velocities

- The slope of the pipe shall be set so that a minimum velocity of 2 feet per second can be maintained at full flow.
- A minimum slope for all pipes shall be 0.5% (under certain circumstances, a minimum slope of 0.3% may be allowed with prior approval in writing from The City).
- Maximum slopes, velocities, and anchor spacings are shown in Table III-3-21. If velocities exceed 15 feet per second for the conveyance system design event described in Section 3.2, provide anchors and/or restrained joints at bends and junctions.

3.4.1.10 Pipes on Steep Slopes

- Slopes 20% or greater shall require all drainage to be piped from the top to the bottom in High Density Polyethylene (HDPE) pipe (butt-fused) or ductile iron pipe welded or mechanically restrained. Additional anchoring design is required for these pipes.
- Above-ground installation is required on slopes greater than 40% to minimize disturbance to steep slopes, unless otherwise approved in writing by The City.
- HDPE pipe systems longer than 100 feet must be anchored at the upstream end if the slope exceeds 20% or as required by The City.
- Above ground installations of HDPE shall address the high thermal expansion/contraction coefficient of the pipe material. An analysis shall be completed to demonstrate that the system as designed will tolerate the thermal expansion of the pipe material.

Table III-3-21. Maximum Pipe Slopes, Velocities and Anchor Requirements

Pipe Material	Pipe Slope Above Which Pipe Anchors Required and Minimum Anchor Spacing	Max. Slope Allowed	Max. Velocity @ Full Flow
Spiral Rib[1], PVC[1]	20% (1 anchor per 100 L.F. of pipe)	30%(3)	30 fps
Concrete[1]	10% (1 anchor per 50 L.F. of pipe)	20%(3)	30 fps
Ductile Iron[4]	40% (1 anchor per pipe section)	None	None
HDPE[2]	50% (1 anchor per 100 L.F. of pipe – cross slope installations may be allowed with additional anchoring and analysis)	None	None

[1] Not allowed in landslide hazard areas.

[2] Butt-fused pipe joints required. Above-ground installation is required on slopes greater than 40% to minimize disturbance to steep slopes.

[3] Maximum slope of 20% allowed for these pipe materials with no joints (one section) if structures are provided at each end and the pipes are property grouted or otherwise restrained to the structures.

[4] Restrained joints required on slopes greater than 25%. Above-ground installation is required on slopes greater than 40% to minimize disturbance to steep slopes.

3.4.1.11 Structures

For the purposes of this Manual, all catch basins and manholes shall meet WSDOT standards such as Type 1L, Type 1, and Type 2. Table III-3-22 presents the structures and pipe sizes allowed by size of structure.

Table III-3-22. Allowable Structures and Pipe Sizes

Catch Basin Type[1]	Maximum Inside Pipe Diameter	
	CMP)(5), Spiral Rib)[5], CPEP (single wall)[5], HDPP, Ductile Iron, PVC [2] (Inches)	Concrete, CPEP (smooth interior), (Inches)
Inlet [4]	12	12
Type 1 [3]	15	12
Type IL [3]	21	18
Type 2 - 48-inch dia.	30	24
Type 2 - 54-inch dia.	36	30
Type 2 – 60-inch dia.	42	36
Type 2 - 72-inch dia.	54	42
Type 2 - 96-inch dia.	72	60

[1] Catch basins (including manhole steps, ladder, and handholds) shall conform to the W.S.D.O.T. Standard Plans or an approved equal based upon submittal for approval.

[2] Maintain the minimum sidewall thickness per this Section.

[3] Maximum 5 vertical feet allowed between grate and invert elevation.

[4] Normally allowed only for use in privately maintained drainage systems and must discharge to a catch basin immediately downstream.

[5] Allowed for private system installations only.

The following criteria shall be used when designing a conveyance system that utilizes catch basins or manholes:

- Catch basin (or manhole) diameter shall be determined by pipe diameter and orientation at the junction structure. A plan view of the junction structure, drawn to scale, will be required when more than four pipes enter the structure on the same plane, or if angles of approach and clearance between pipes is of concern. The plan view (and sections if necessary) must insure a minimum distance (of solid concrete wall) between pipe openings of 8 inches for 48-inch and 54-inch diameter catch basins and 12 inches for 72-inch and 96-inch diameter catch basins
- Type 1 catch basins should be used when overall catch basin height does not exceed eight (8) feet or when the invert depth does not exceed five (5) feet below rim.
- Type 1L catch basins should be used for the following situations:
  - When overall catch basin height does not exceed eight (8) feet or when invert depth does not exceed five (5) feet below rim.
  - When any pipes tying into the structure exceed 21 inches connecting to the long side, or 18 inches connecting to the short side at or very near to right angles.
- Type 2 (48-inch minimum diameter) catch basins or manholes shall be used at the following locations or for the following situations:
  - When overall structure height exceed 8 feet.
  - When all pipes tying into the structure exceed the limits set for Type 1 structures. Type 2 catch basins or manholes over 4 feet in height shall have standard ladders.
  - All Type 2 catch basins shall be specifically approved by the City. Type 2 catch basins shall not be substituted for manholes unless specifically approved by The City.
- The maximum slope of ground surface for a radius of 5 feet around a catch basin grate shall be 3:1. The preferred slope is 5:1 to facilitate maintenance access.
- Catch basin (or manhole) evaluation of structural integrity for H-20 loading will be required for multiple junction catch basins and other structures that exceed the recommendations of the manufacturers. The City may require further review for determining structural integrity.
- Catch basins leads shall be no longer than 50 feet.
- Catch basins shall not be installed in graveled areas or sediment generating areas.

- Catch basins shall be located:
  - At the low point of any sag vertical curve or grade break where the grade of roadway transitions from a negative to a positive grade.
  - Prior to any intersection such that a minimal amount of water flows across the intersection, through a curb ramp, or around a street return.
  - Prior to transitions from a typical crown to a full warp through a down hill grade.
- Catch basins shall not be placed in areas of expected pedestrian traffic. The engineer shall avoid placing a catch basin in crosswalks, adjacent to curb ramps, or in the gutter of a driveway. Care shall be taken on the part of the engineer to assure that the catch basin will not be in conflict with any existing or proposed utilities.
- All catch basins, inlets, etc. shall be marked as directed by the City.
- Connections to structures and mains shall be at 90°. Slight variations may be allowed.
- The maximum surface run between structures shall not exceed 400 linear feet.
- Changes in pipe direction, or increases or decreases in size, shall only be allowed at structures.
- For pipe slope less than the required minimum, distance between structures shall be decreased to 200 linear feet.
- For Type 1and 1L, catch basin to catch basin connections shall not be allowed.
- Bubble up systems shall not be allowed.

3.4.1.12 Pipe Clearances

Horizontal

A minimum of 5 feet horizontal separation shall be maintained between the storm main and all water or sanitary sewer mains. This shall also apply to laterals.

Vertical

Where crossing an existing or proposed utility or sanitary sewer main, the alignment of the storm system shall be such that the two systems cross as close to perpendicular as possible. Where crossing a sanitary sewer main, provide a minimum 18 inches of vertical separation. For crossings of water mains refer to the City Engineering Design and Construction Standards. The minimum vertical separation for a storm main crossing any other utility shall be 6 inches. *Note: Where the vertical separation of two parallel systems exceeds the horizontal separation, additional horizontal separation may be required to provide future access to the deeper system.*

3.4.1.13 Pipe Cover

- Suitable pipe cover over storm pipes in road rights-of-way shall be calculated for H-20 loading by the Project Engineer. Pipe cover is measured from the finished grade elevation down to the top of the outside surface of the pipe. Pipe manufacturer's recommendations are acceptable if verified by the Project Engineer.
- PVC (ASTM D3034 - SDR 35) minimum cover shall be three feet in areas subject to vehicular traffic; maximum cover shall be 30 feet or per the manufacturer's recommendations and as verified with calculations from the Project Engineer.
- Cover for ductile iron pipe may be reduced to a 1-foot minimum. Use of reinforced concrete pipe or AWWA C900 PVC pipe in this situation requires the engineer to provide verifying calculations to confirm the adequacy of the selected pipe's strength for the burial condition.
- Pipe cover in areas not subject to vehicular loads, such as landscape planters and yards, may be reduced to a 1-foot minimum.
- Catch basin evaluation of structural integrity for H-20 loading will be required for multiple junction catch basins and other structures that exceed the recommendations of the manufacturers.

3.4.1.14 System Connections

Connections to a pipe system shall be made only at catch basins or manholes. No wyes or tees are allowed except on private roof/footing/yard drain systems on pipes 8 inches in diameter, or less. Where wyes and tees are utilized, clean-outs shall be required upstream of each wye and tee.

Connections to structures and mains shall be at 90°. Slight variations may be allowed.

Minimum fall through manhole structures shall be 0. 1 foot. Pipes of different diameters shall be aligned vertically in manholes by one of the following methods, listed in order of preference:

1. Match pipe crowns
2. Match 80% diameters of pipes.
3. Match pipe inverts or use City approved drop inlet connection.

Drop connections shall be considered on a case by case basis.

Private connections to the City storm system shall be at a drainage structure (i.e. catch basin or manhole) and only if sufficient capacity exists. Tee connections into the side of a pipe shall not be permitted.

Roof downspouts may be infiltrated or dispersed in accordance with the provisions of Chapter 2. Infiltration and dispersion shall be evaluated first. If infiltration and dispersion are not feasible, roof drains may be discharged through the curb per Section 2.1.5 into the roadway gutter or connected into a drainage structure. Roof downspouts may **not** be connected directly into the side of a storm drainage pipe.

3.4.1.15 Debris Barriers

Access barriers are required on all pipes 12 inches and larger exiting a closed pipe system. Debris barriers (trash racks) are required on all pipes entering a pipe system. See Figure III-3-27 for required debris barriers on pipe ends outside of roadways and for requirements on pipe ends (culverts) projecting from driveways or roadway side slopes.

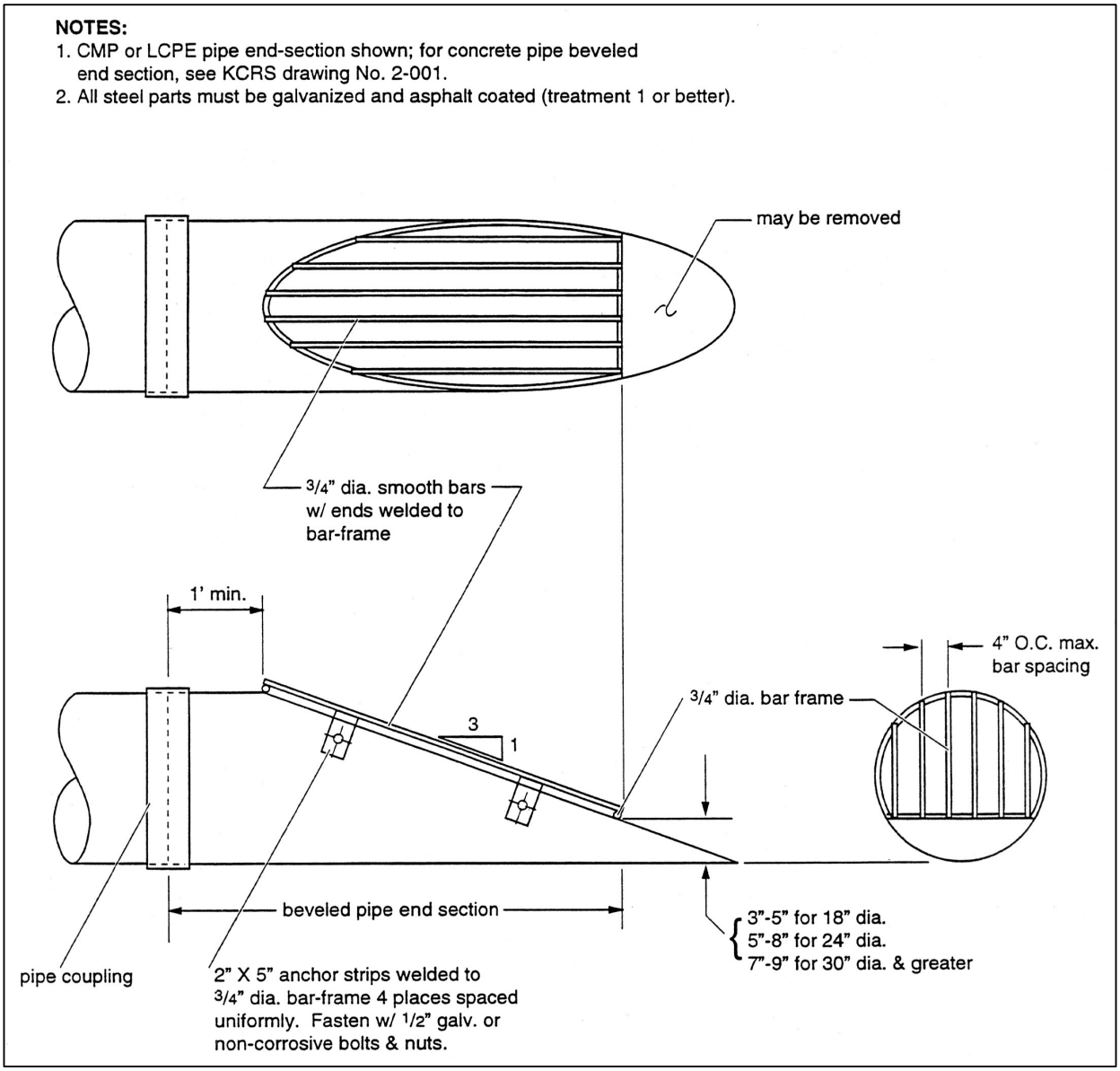

Figure III-3-27. Debris Barrier

3.4.2 Culverts

Culverts are relatively short segments of pipe of circular, elliptical, rectangular, or arch cross section and typically convey flow under road embankments or driveways. Culverts installed in streams and natural drainages shall meet the City's Critical Areas Code and *any fish passage requirements of the Washington State Department of Fish and Wildlife.*

3.4.2.1 Design Event

The design event for culverts is given in Section 3.2.

3.4.2.2 Design Flows

Design flows for sizing or assessing the capacity of culverts shall be determined using the hydrologic analysis methods described in this chapter.

Other single event models as described in Chapter 2 of this volume may be used to determine design flows. In addition, culverts shall not exceed the headwater requirements as established below:

3.4.2.3 Headwater

- For culverts 18-inch diameter or less, the maximum allowable headwater elevation for the 100-year, 24-hour design storm (measured from the inlet invert) shall not exceed 2 times the pipe diameter or arch-culvert-rise.
- For culverts larger than 18-inch diameter, the maximum allowable headwater elevation for the 100-year, 24-hour design storm (measured from the inlet invert) shall not exceed 1.5 times the pipe diameter or arch-culvert-rise.
- The maximum headwater elevation at the 100-year, 24-hour design flow shall be below any road or parking lot subgrade.

3.4.2.4 Conveyance Capacity

Use the procedures presented in this section to analyze both inlet and outlet control conditions to determine which governs. Culvert capacity is then determined using graphical methods.

3.4.2.5 Inlet Control Analysis

Nomographs such as those provided in Figure III-3-28 and Figure III-3-29 can be used to determine the inlet control headwater depth at design flow for various types of culverts and inlet configurations. These and other nomographs can be found in the FHWA publication *Hydraulic Design of Highway Culverts, HDS No. #5 (Report No. FHWA-NHI-01-020),* September 2001; or the WSDOT *Hydraulic Manual.*

Also available in the FHWA publication are the design equations used to develop the inlet control nomographs. These equations are presented below.

For **unsubmerged** inlet conditions (defined by $Q/AD^{0.5} \leq 3.5$);

Form 1*: $HW/D = H_c/D + K(Q/AD^{0.5})^M - 0.5S^{**}$ (equation 9)

Form 2*: $HW/D = K(Q/AD^{0.5})^M$ (equation 10)

For **submerged** inlet conditions (defined by $Q/AD^{0.5} \geq 4.0$);

$HW/D = c(Q/AD^{0.5})^2 + Y - 0.5S^{**}$ (equation 11)

Where HW = headwater depth above inlet invert (ft)

D = interior height of culvert barrel (ft)

H_c = specific head (ft) at critical depth ($d_c + V_c^2/2g$)

Q = flow (cfs)

A = full cross-sectional area of culvert barrel (sf)

S = culvert barrel slope (ft/ft)

K,M,c,Y = constants from Table III-3-23

The specified head H_c is determined by the following equation:

$H_c = d_c + V_c^2/2g$ (equation 12)

where d_c = critical depth (ft); see Figure III-3-33

V_c = flow velocity at critical depth (fps)

g = acceleration due to gravity (32.2 ft/sec2)

* The appropriate equation form for various inlet types is specified in Table III-3-23

** For mitered inlets, use +0.7S instead of –0.5S.

NOTE: Between the unsubmerged and submerged conditions, there is a transition zone ($3.5 < Q/AD^{0.5} < 4.0$) for which there is only limited hydraulic study information. The transition zone is defined empirically by drawing a curve between and tangent to the curves defined by the unsubmerged and submerged equations. In most cases, the transition zone is short and the curve is easily constructed.

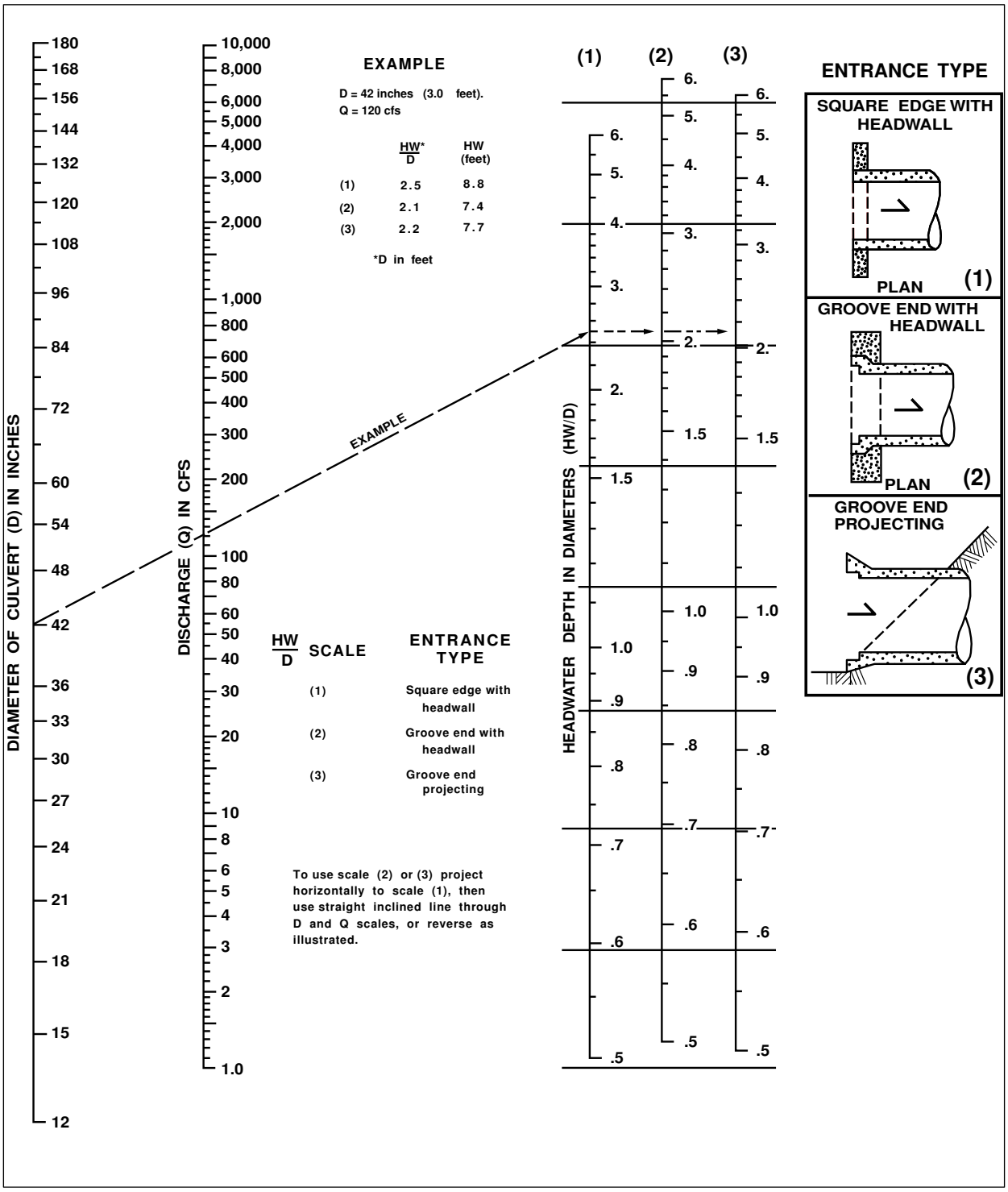

Figure III-3-28. Headwater Depth for Smooth Interior Pipe Culverts with Inlet Control

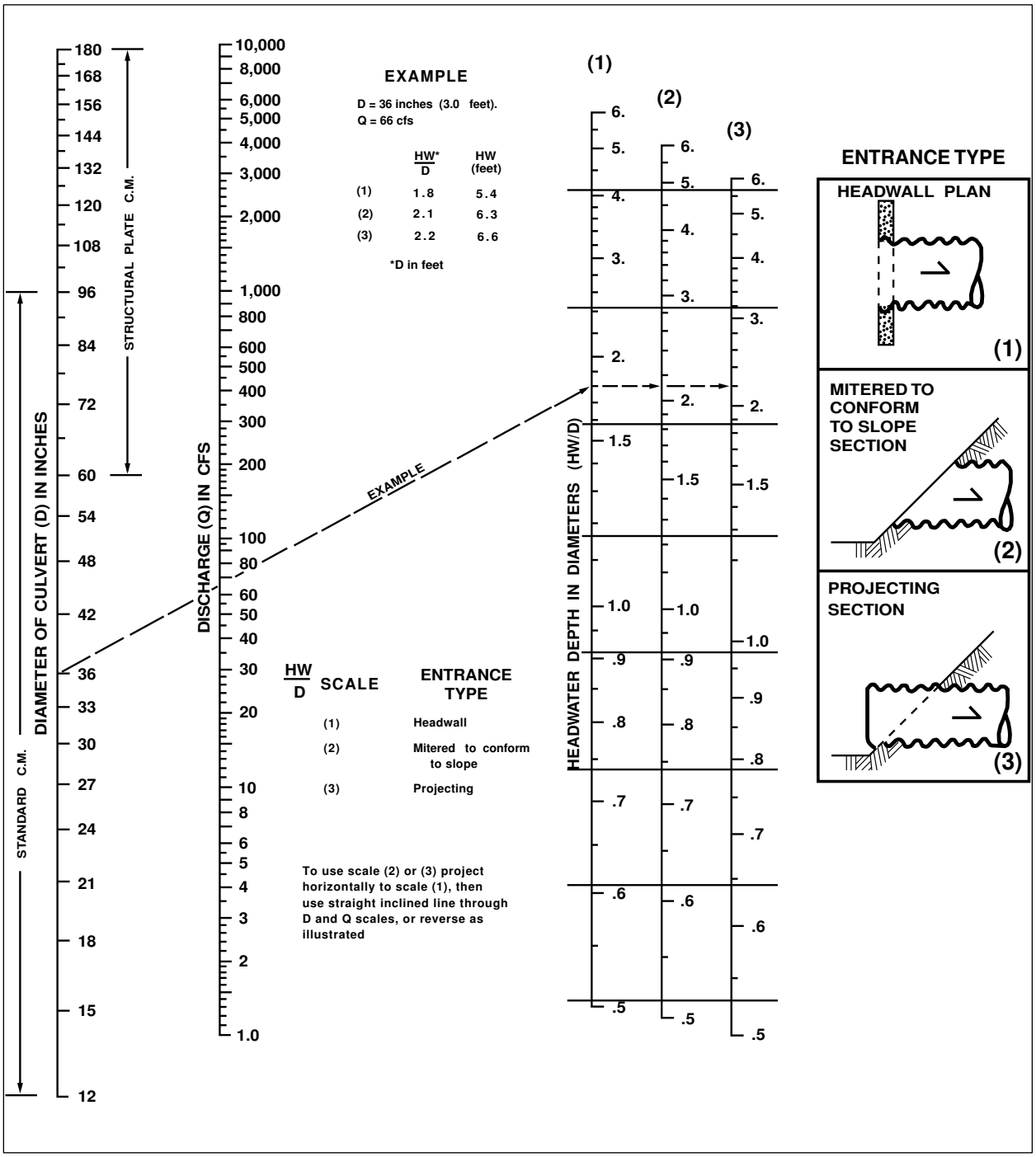

Figure III-3-29. Headwater Depth for Corrugated Pipe Culverts with Inlet Control

Table III-3-23. Constants for Inlet Control Equations*

Shape and Material	Inlet Edge Description	Unsubmerged			Submerged	
		Equation Form	*K*	*M*	*c*	*Y*
Circular Concrete	Square edge with headwall	1	0.0098	2.0	0.0398	0.67
	Groove end with headwall		0.0078	2.0	0.0292	0.74
	Groove end projecting		0.0045	2.0	0.0317	0.69
Circular CMP	Headwall	1	0.0078	2.0	0.0379	0.69
	Mitered to slope		0.0210	1.33	0.0463	0.75
	Projecting		0.0340	1.50	0.0553	0.54
Rectangular Box	30° to 75° wingwall flares	1	0.026	1.0	0.0385	0.81
	90° and 15° wingwall flares		0.061	0.75	0.0400	0.80
	0° wingwall flares		0.061	0.75	0.0423	0.82
CM Boxes	90° headwall	1	0.0083	2.0	0.0379	0.69
	Thick wall projecting		0.0145	1.75	0.0419	0.64
	Thin wall projecting		0.0340	1.5	0.0496	0.57
Arch CMP	90° headwall	1	0.0083	2.0	0.0496	0.57
	Mitered to slope		0.0300	1.0	0.0463	0.75
	Projecting		0.0340	1.5	0.0496	0.53
Bottomless Arch CMP	90° headwall	1	0.0083	2.0	0.0379	0.69
	Mitered to slope		0.0300	2.0	0.0463	0.75
	Thin wall projecting		0.0340	1.5	0.0496	0.57

*Source: FHWA HDS No. 5

3.4.2.6 Outlet Control Analysis

Nomographs such as those provided in Figure III-3-31 and Figure III-3-32 can be used to determine the **outlet control headwater depth** at design flow for various types of culverts and inlets. Outlet control nomographs other than those provided can be found in *FHWA HDS No. 5* or the *WSDOT Hydraulic Manual.*

The outlet control headwater depth can also be determined using the simple Backwater Analysis method presented in Section 3.4 for analyzing pipe system capacity. This procedure is summarized as follows for culverts:

$$HW = H + TW - LS \qquad \text{(equation 13)}$$

where $H = H_f + H_e + H_{ex}$

H_f = friction loss (ft) = $(V^2n^2L)/(2.22R^{1.33})$

NOTE: If $(H_f+TW-LS) < D$, adjust H_f such that $(H_f+TW-LS) = D$. This will keep the analysis simple and still yield reasonable results (erring on the conservative side).

H_e = entrance head loss (ft) = $K_e(V^2/2g)$

H_{ex} = exit head loss (ft) = $V^{2/}2g$

TW = tailwater depth above invert of culvert outlet (ft)

NOTE: If $TW < (D+d_c)/2$, set $TW = (D+d_c)/2$. This will keep the analysis simple and still yield reasonable results.

L = length of culvert (ft)
S = slope of culvert barrel (ft/ft)
D = interior height of culvert barrel (ft)
V = barrel velocity (fps)
n = Manning's roughness coefficient from Table III-3-19
R = hydraulic radius (ft)
K_e = entrance loss coefficient (from Table III-3-24)
G = acceleration due to gravity (32.2 ft/sec^2)
d_c = critical depth (ft); see Figure III-3-33

NOTE: The above procedure should not be used to develop stage/discharge curves for level pool routing purposes because its results are not precise for flow conditions where the hydraulic grade line falls significantly below the culvert crown (i.e., less than full flow conditions).

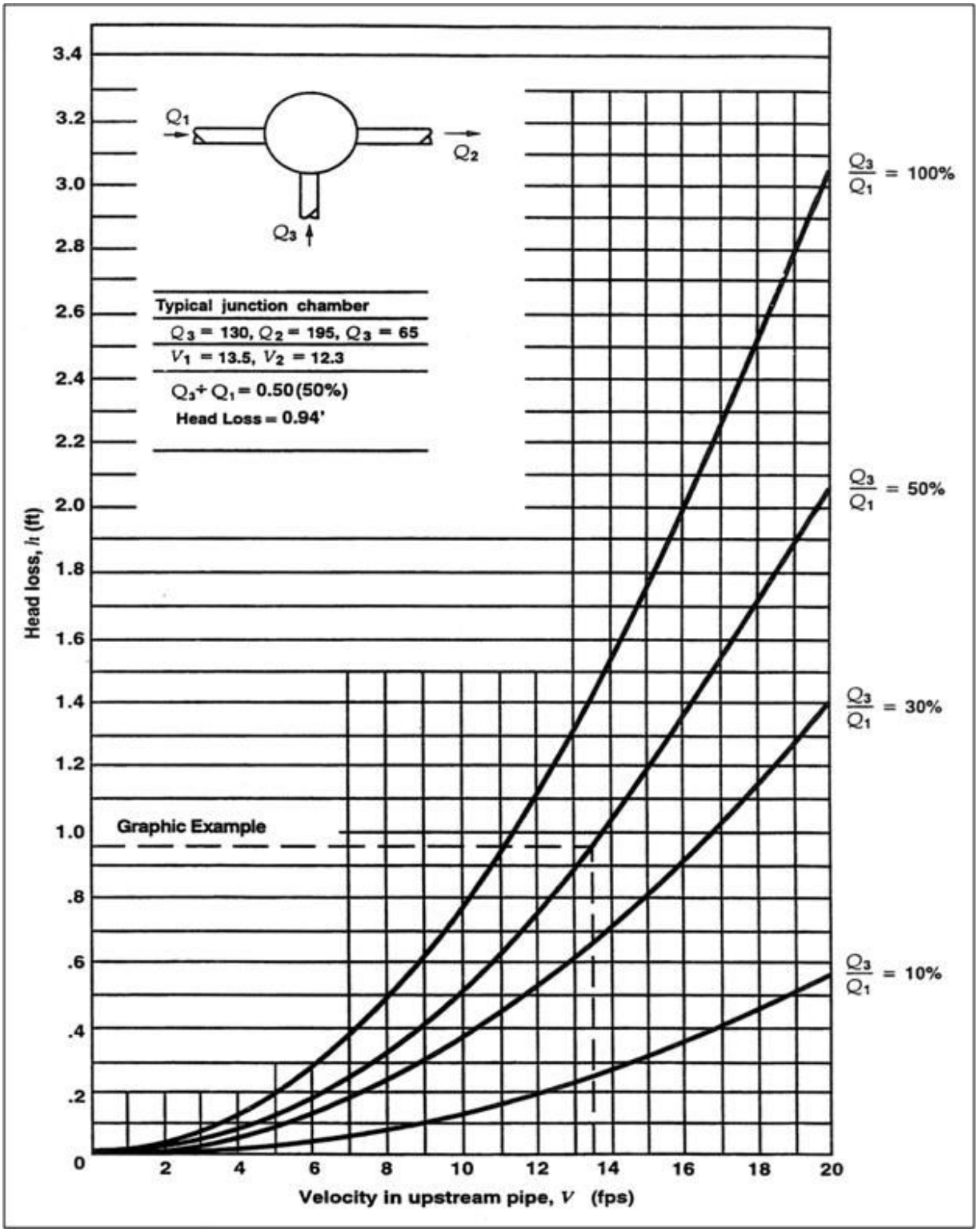

Figure III-3-30. Junction Head Loss in Structures

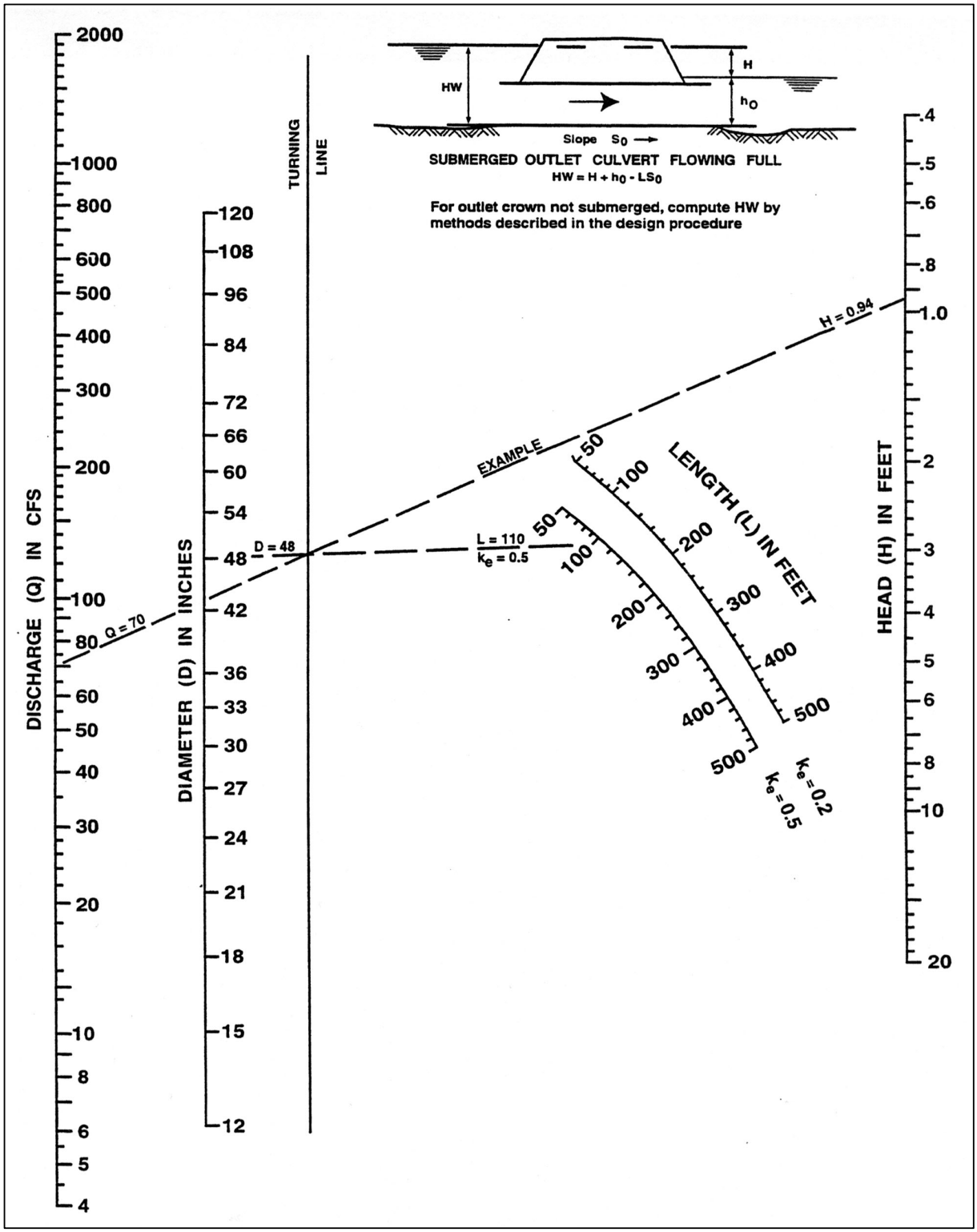

Figure III-3-31. Head for Culverts (Pipe W/"N"=0.012) Flowing Full with Outlet Control

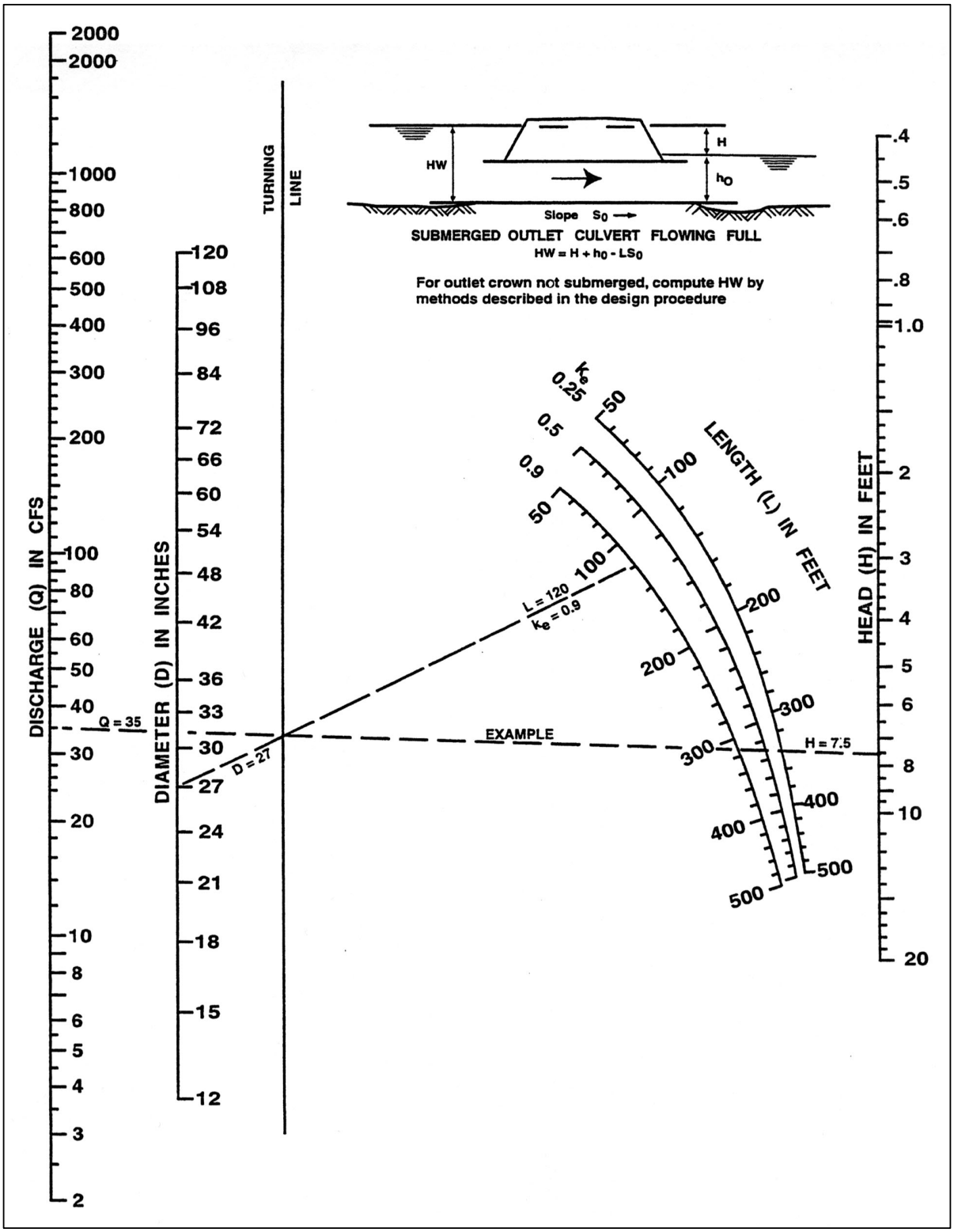

Figure III-3-32. Head for Culverts (Pipe W/"N"=0.024) Flowing Full with Outlet Control

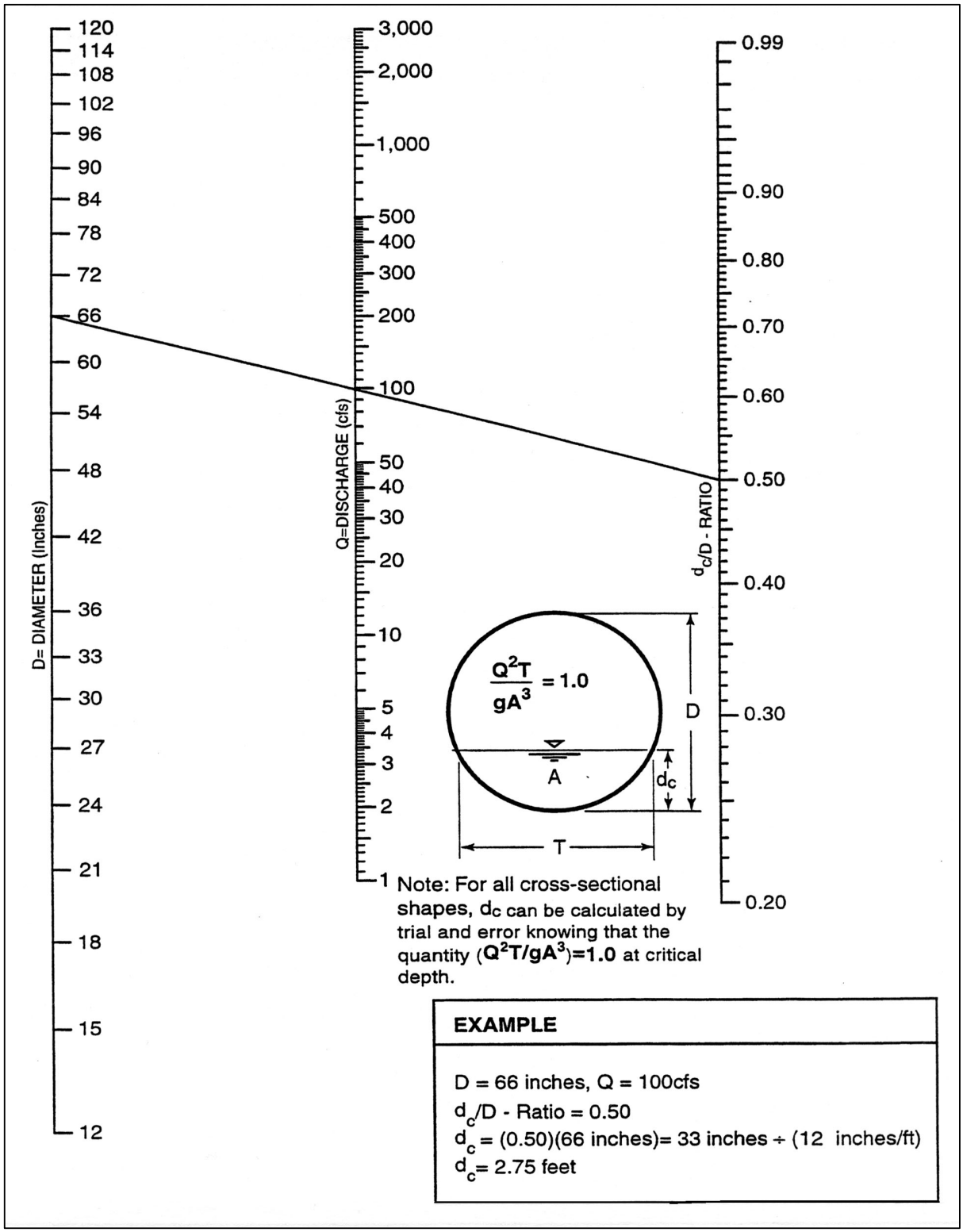

Figure III-3-33. Critical Depth of Flow for Circular Culverts

Table III-3-24. Entrance Loss Coefficients

Type of Structure and Design Entrance	Coefficient, K_e
Pipe, Concrete, PVC, Spiral Rib, DI, and LCPE	
Projecting from fill, socket (bell) end	0.2
Projecting from fill, square cut end	0.5
Headwall, headwall and wingwalls	
Socket end of pipe (groove-end)	0.2
Square-edge	0.5
Rounded (radius = 1/12D)	0.2
Mitered to conform to fill slope	0.7
End section conforming to fill slope*	0.5
Beveled edges, 33.7° or 45° bevels	0.2
Side- or slope-tapered inlet	0.2
Pipe, Pipe-Arch, Corrugated Metal and Other Non-Concrete or D.I.	
Projecting from fill (no headwall)	0.9
Headwall, or headwall and wingwalls (square-edge)	0.5
Mitered to conform to fill slope (paved or unpaved slope)	0.7
End section conforming to fill slope*	0.5
Beveled edges, 33.7° or 45° bevels	0.2
Side- or slope-tapered inlet	0.2
Box, Reinforced Concrete	
Headwall parallel to embankment (no wingwalls)	
Square-edged on 3 edges	0.5
Rounded on 3 edges to radius of 1/12 barrel dimension or beveled edges on 3 sides	0.2
Wingwalls at 30° to 75° to barrel	
Square-edged at crown	0.4
Crown edge rounded to radius of 1/12 barrel dimension or beveled top edge	0.2
Wingwall at 10° to 25° to barrel	
Square-edged at crown	0.5
Wingwalls parallel (extension of sides)	
Square-edged at crown	0.7
Side- or slope-tapered inlet	0.2

NOTE: "End section conforming to fill slope" are the sections commonly available from manufacturers. From limited hydraulic tests they are equivalent in operation to a headwall in both **inlet and outlet control**. Some end sections incorporating a **closed taper** in their design have a superior hydraulic performance.

3.4.2.7 Inlets and Outlets

All inlets and outlets in or near roadway embankments must be flush with and conforming to the slope of the embankments.

- For culverts 18-inch diameter and larger, the embankment around the culvert inlet shall be protected from erosion by **rock lining or riprap** as specified in Table III-3-27, except the length shall extend at least 5 feet upstream of the culvert, and the height shall be at or above the design headwater elevation.
- **Inlet structures**, such as concrete headwalls, may provide a more economical design by allowing the use of smaller entrance coefficients and, hence, smaller diameter culverts. When properly designed, they will also protect the embankment from erosion and eliminate the need for rock lining.
- In order to maintain the stability of roadway embankments, concrete headwalls, wingwalls, or tapered inlets and outlets may be required if **right-of-way or easement constraints** prohibit the culvert from extending to the toe of the embankment slopes. All inlet structures or headwalls installed in or near roadway embankments must be flush with and conforming to the slope of the embankment.
- **Debris barriers (trash racks)** are required on the inlets of all culverts that are over 60 feet in length and are 12 to 36 inches in diameter. This requirement also applies to the inlets of pipe systems. See Figure III-3-27 for a debris barrier detail. Exceptions are culverts on Type 1 or 2 streams.
- For culverts 18-inch diameter and larger, the receiving channel of the outlet shall be protected from erosion by **rock lining** specified in Table III-3-27, except the height shall be one foot above maximum tailwater elevation or one foot above the crown per Figure III-3-41, whichever is higher.

3.4.3 Open Channels

This section presents the methods, criteria, and details for hydraulic analysis and design of open channels.

3.4.3.1 Natural Channels

Natural channels are defined as those that have occurred naturally due to the flow of surface waters, or those that, although originally constructed by human activity, have taken on the appearance of a natural channel including a stable route and biological community. They may vary hydraulically along each channel reach and should be left in their natural condition, wherever feasible or required, in order to maintain natural hydrologic functions and wildlife habitat benefits from established vegetation.

3.4.3.2 Constructed Channels

Constructed channels are those constructed or maintained by human activity and include bank stabilization of natural channels. Constructed channels shall be either vegetation-lined, rock lined, or lined with appropriately bioengineered vegetation.

- **Vegetation-lined channels** are the most desirable of the constructed channels when properly designed and constructed. The vegetation stabilizes the slopes of the channel, controls erosion of the channel surface, and removes pollutants. The channel storage, low velocities, water quality benefits, and greenbelt multiple-use benefits create significant advantages over other constructed channels. The presence of vegetation in channels creates turbulence, which results in loss of energy and increased flow retardation; therefore, the design engineer must consider sediment deposition and scour, as well as flow capacity, when designing the channel.
- **Rock-lined channels** are necessary where a vegetative lining will not provide adequate protection from erosive velocities they may be constructed with riprap, gabions, or slope mattress linings. The rock lining increases the turbulence, resulting in a loss of energy and increased flow retardation. Rock lining also permits a higher design velocity and therefore a steeper design slope than in grass-lined channels. Rock linings are also used for erosion control at culvert and storm drain outlets, sharp channel bends, channel confluences, and locally steepened channel sections.
- **Bioengineered vegetation lining** is a desirable alternative to the conventional methods of rock armoring. *Soil bioengineering* is a highly specialized science that uses living plants and plant parts to stabilize eroded or damaged land. Properly bioengineering systems are capable of providing a measure of immediate soil protection and mechanical reinforcement. As the plants grow they produce vegetative protective cover and a root reinforcing matrix in the soil mantle. This root reinforcement serves several purposes:

    a. The developed anchor roots provide both shear and tensile strength to the soil, thereby providing protection from the frictional shear and tensile velocity components to the soil mantle during the time when flows are receding and pore pressure is high in the saturated bank.

    b. The root mat provides a living filter in the soil mantle that allows for the natural release of water after the high flows have receded.

    c. The combined root system exhibits active friction transfer along the length of the living roots. This consolidates soil particles in the bank and serves to protect the soil structure from collapsing and the stabilization measures from failing.

3.4.3.3 Design Flows

Design flows for sizing or assessing the capacity of open channels shall be determined using the hydrologic analysis methods described in this chapter. Single event models as described in Chapter 2 of this volume may be used to determine design flows. In addition, open channel shall meet the following:

- **Open channels** shall be designed to provide required conveyance capacity while minimizing erosion and allowing for aesthetics, habitat preservation, and enhancement.
- **An access easement for maintenance** is required along all constructed channels located on private property. Required easement widths and building setback lines vary with channel top width.
- **The maximum distance** from the edge of the adjacent access to the farthest point shall be eighteen feet (18').
- **Channel cross-section geometry** shall be trapezoidal, triangular, parabolic, or segmental as shown in Figure III-3-34 through Figure III-3-36. Side slopes shall be no steeper than 3:1 for vegetation-lined channels and 2:1 for rock-lined channels.
- **Vegetation-lined channels** shall have bottom slope gradients of 6% or less and a maximum velocity at design flow of 5 fps (see Table III-3-26).
- **Rock-lined channels or bank stabilization of natural channels** shall be used when design flow velocities exceed 5 feet per second. Rock stabilization shall be in accordance with Table III-3-26 or stabilized with bioengineering methods as described above in "Constructed Channels."

PROPERTIES OF DITCHES

NO.	DIMENSIONS				HYDRAULICS			
	Side Slopes	B	H	W	A	WP	R	$R^{(2/3)}$
D-1	--	--	6.5"	5'-0"	1.84	5.16	0.356	0.502
D-1C	--	--	6"	25'-0"	6.25	25.50	0.245	0.392
D-2A	1.5:1	2'-0"	1'-0"	5'-0"	3.50	5.61	0.624	0.731
B	2:1	2'-0"	1'-0"	6'-0"	4.00	6.47	0.618	0.726
C	3:1	2'-0"	1'-0"	8'-0"	5.00	8.32	0.601	0.712
D-3A	1.5:1	3'-0"	1'-6"	7'-6"	7.88	8.41	0.937	0.957
B	2:1	3'-0"	1'-6"	9'-0"	9.00	9.71	0.927	0.951
C	3:1	3'-0"	1'-6"	12'-0"	11.25	12.49	0.901	0.933
D-4A	1.5:1	3'-0"	2'-0"	9'-0"	12.00	10.21	1.175	1.114
B	2:1	3'-0"	2'-0"	11'-0"	14.00	11.94	1.172	1.112
C	3:1	3'-0"	2'-0"	15'-0"	18.00	15.65	1.150	1.098
D-5A	1.5:1	4'-0"	3'-0"	13'-0"	25.50	13.82	1.846	1.505
B	2:1	4'-0"	3'-0"	16'-0"	30.00	16.42	1.827	1.495
C	3:1	4'-0"	3'-0"	22'-0"	39.00	21.97	1.775	1.466
D-6A	2:1	--	1'-0"	4'-0"	2.00	4.47	0.447	0.585
B	3:1	--	1'-0"	6'-0"	3.00	6.32	0.474	0.608
D-7A	2:1	--	2'-0"	8'-0"	8.00	8.94	0.894	0.928
B	3:1	--	2'-0"	12'-0"	12.00	12.65	0.949	0.965
D-8A	2:1	--	3'-0"	12'-0"	18.00	13.42	1.342	1.216
B	3:1	--	3'-0"	18'-0"	27.00	18.97	1.423	1.265
D-9	7:1	--	1'-0"	14'-0"	7.00	14.14	0.495	0.626
D-10	7:1	--	2'-0"	28'-0"	28.00	28.28	0.990	0.993
D-11	7:1	--	3'-0"	42'-0"	63.00	42.43	1.485	1.302

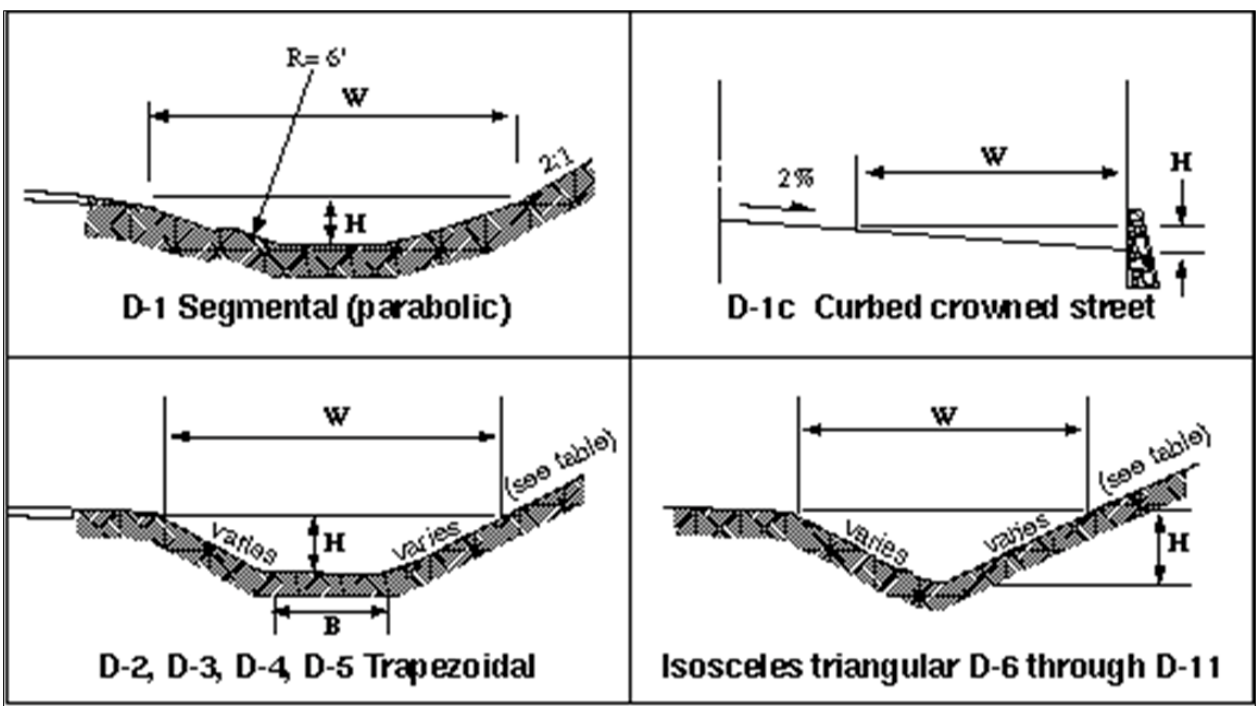

Figure III-3-34. Ditches – Common Section

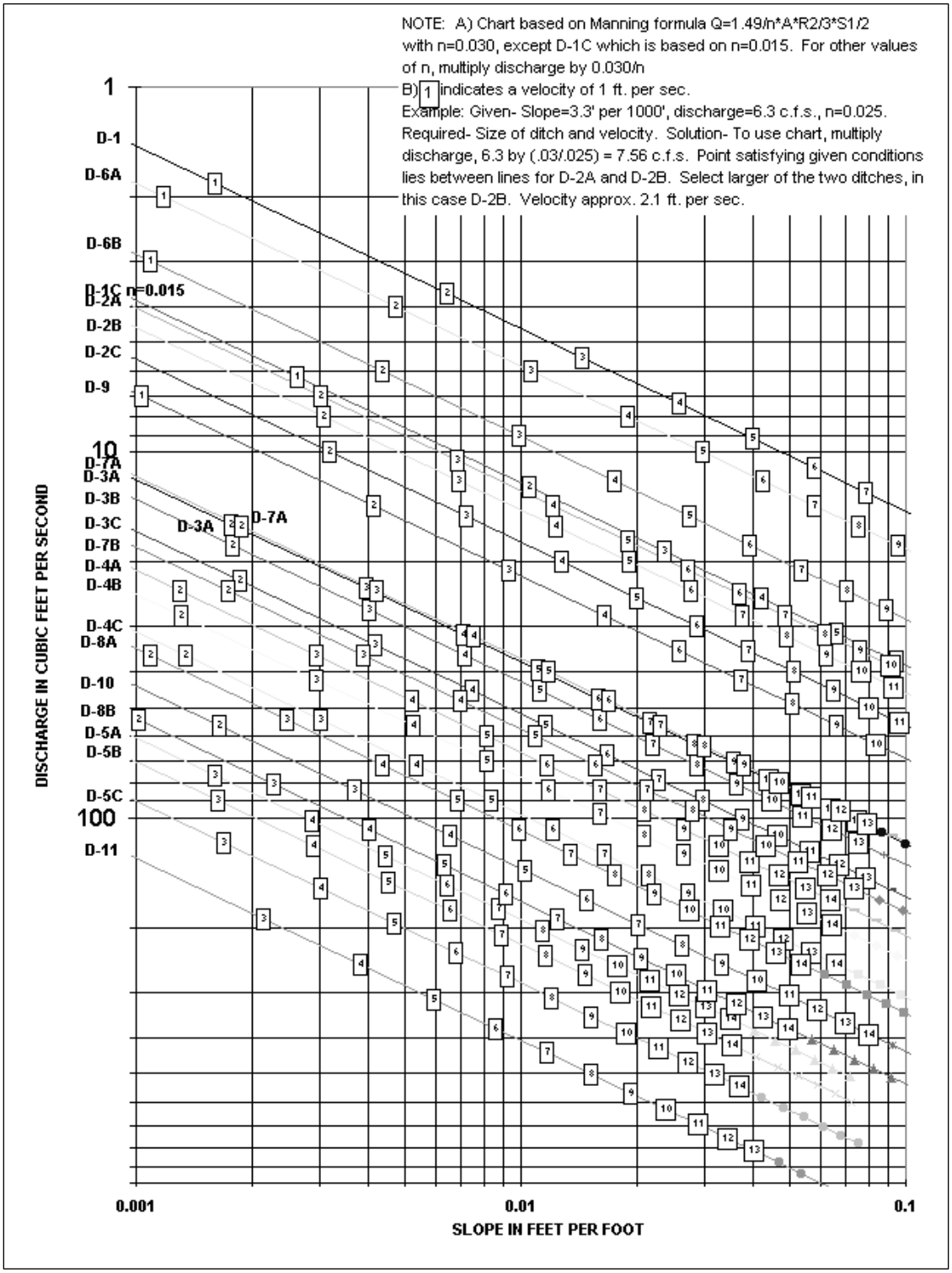

Figure III-3-35. Drainage Ditches – Common Sections

Section	Area A	Wetted perimeter P	Hydraulic radius R	Top width W	Hydraulic depth D	Section factor Z
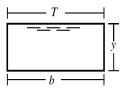 Rectangle	by	$b + 2y$	$\frac{by}{b + 2y}$	b	y	$by^{1.5}$
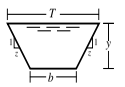 Trapezoid	$(b + zy)y$	$b + 2y\sqrt{1 + z^2}$	$\frac{(b + zy)y}{b + 2y\sqrt{1 + z^2}}$	$b + 2zy$	$\frac{(b + zy)y}{b + 2zy}$	$\frac{[(b + zy)y]^{1.5}}{\sqrt{b + 2zy}}$
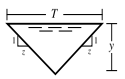 Triangle	zy^2	$2y\sqrt{1 + z^2}$	$\frac{zy}{2\sqrt{1 + z^2}}$	$2zy$	$^1/_2 y$	$\frac{\sqrt{2}}{2} zy^{2.5}$
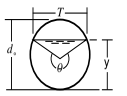 Circle	$^1/_8(\theta - \sin\theta)d_\circ^2$	$^1/_2\theta d_\circ$	$^1/_4(1 - \frac{\sin\theta}{\theta})d_\circ$	$(\sin(^1/_2\theta)d_\circ)$ or $2\sqrt{y(d_\circ - y)}$	$^1/_8\left(\frac{\theta - \sin\theta}{\sin {}^1/_2\theta}\right)d_\circ$	$\frac{\sqrt{2}}{32}\frac{(\theta - \sin\theta)^{1.5}}{(\sin {}^1/_2\theta)^{0.5}} d_\circ^{2.5}$
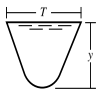 Parabola	$^2/_3 Ty$	$T + \frac{8y^2}{3T}$ *	$\frac{2T^2 y}{3T^2 + 8y^2}$ *	$\frac{3A}{2y}$	$^2/_3 y$	$^2/_9\sqrt{6}Ty^{1.5}$
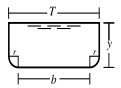 Round-cornered Rectangle ($y>r$)	$(\frac{\pi}{2} - 2)r^2 + (b + 2r)y$	$(\pi - 2)r + b + 2y$	$\frac{(\frac{\pi}{2} - 2)r^2 + (b + 2r)y}{(\pi - 2)r + b + 2y}$	$b + 2r$	$\frac{(\frac{\pi}{2} - 2)r^2}{(b + 2r)} + y$	$\frac{[(\frac{\pi}{2} - 2)r^2 + (b + 2r)y]^{1.5}}{\sqrt{b + 2y}}$
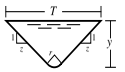 Round-bottomed Triangle	$\frac{T^2}{4z} - \frac{r^2}{z}(1 - z\cot^{-1}z)$	$\frac{T}{z}\sqrt{1 + z^2} - \frac{2r}{z}(1 - z\cot^{-1} z)$	$\frac{A}{P}$	$2[z(y - r) + r\sqrt{1 + z^2}]$	$\frac{A}{T}$	$A\sqrt{\frac{A}{T}}$

*Satisfactory approximation for the interval 0<x≤1, where x=4y/T. When x>1, use the exact expression $P = (^T/_2)\left[\sqrt{1 + x^2} + {}^1/_x \ln\left(x + \sqrt{1 + x^2}\right)\right]$

Figure III-3-36. Geometric Elements of Common Sections

Table III-3-25. Values of the Roughness Coefficient "n"

Type of Channel and Description	Manning's "*n*"* (Normal)
I. Constructed Channels	
a. Earth, straight and uniform	
1. Clean, recently completed	0.018
2. Gravel, uniform section, clean	0.025
3. With short grass, few weeds	0.027
b. Earth, winding and sluggish	
1. No vegetation	0.025
2. Grass, some weeds	0.030
3. Dense weeds or aquatic plants in deep channels	0.035
4. Earth bottom and rubble sides	0.030
5. Stony bottom and weedy banks	0.035
6. Cobble bottom and clean sides	0.040
c. Rock lined	
1. Smooth and uniform	0.035
2. Jagged and irregular	0.040
d. Channels not maintained, weeds and brush uncut	
1. Dense weeds, high as flow depth	0.080
2. Clean bottom, brush on sides	0.050
3. Same as #2, highest stage of flow	0.070
4. Dense brush, high stage	0.100

Type of Channel and Description	Manning's "*n*"* (Normal)
II. Natural Streams	
II-1 Minor Streams (top width at flood stage <100 ft)	
a. Streams on plain	
1. Clean, straight, full stage no rifts or deep pools	0.030
2. Same as #1, but more stones and weeds	0.035
3. Clean, winding, some pools and shoals	0.040
4. Same as #3, but some weeds	0.040
5. Same as #4, but more stones	0.070
6. Sluggish reaches, weedy deep pools	0.100
7. Very weedy reaches, deep pools, or floodways with heavy stand of timber and underbrush	0.050
b. Mountain streams, no vegetation in channel, banks usually steep, trees and brush along banks submerged at high stages	
1. Bottom: gravel, cobbles, and few boulders	0.040
2. Bottom: cobbles with large boulders	0.050
II-2 Floodplains	
a. Pasture, no brush	
1. Short grass	0.030
2. High grass	0.035
b. Cultivated areas	
1. No crop	0.030
2. Mature row crops	0.035
3. Mature field crops	0.040
c. Brush	
1. Scattered brush, heavy weeds	0.050
2. Light brush and trees	0.060
3. Medium to dense brush	0.070
4. Heavy, dense brush	0.100
d. Trees	
1. Dense willows, straight	0.150
2. Cleared land with tree stumps, no sprouts	0.040
3. Same as #2, but with heavy growth of sprouts	0.060
4. Heavy stand of timber, a few down trees, little undergrowth, flood stage below branches	0.100
5. Same as #4, but with flood stage reaching branches	0.120

***Note:** These "n" values are "normal" values for use in analysis of channels. For conservative design for channel capacity, the maximum values listed in other references should be considered. For channel bank stability, the minimum values should be considered.*

Table III-3-26. Channel Protection

Velocity at Design Flow (fps)		REQUIRED PROTECTION		
Greater than	**Less than or equal to**	**Type of Protection**	**Thickness**	**Minimum Height Above Design Water Surface**
0	5	Grass lining or bioengineered lining	N/A	0.5 foot
5	8	Rock lining(1) or bioengineered lining	1 foot	1 foot
8	12	Riprap(2)	2 feet	2 feet
12	20	Slope mattress gabion, etc.	Varies	2 feet

(1) Rock Lining shall be reasonable well graded as follows:
Maximum stone size: 12 inches
Median stone size: 8 inches
Minimum stone size: 2 inches

(2) Riprap shall be reasonably well graded as follows:
Maximum stone size: 24 inches
Median stone size: 16 inches
Minimum stone size: 4 inches

Note: *Riprap sizing is governed by side slopes on channel, assumed to be approximately 3:1.*

3.4.3.4 Conveyance Capacity

There are three acceptable methods of analysis for sizing and analyzing the capacity of open channels:

- Manning's equation for preliminary sizing
- Direct Step backwater method
- Standard Step backwater method

3.4.3.5 Manning's Equation for Preliminary Sizing

Manning's equation is used for preliminary sizing of open channel reaches of uniform cross section and slope (i.e., prismatic channels) and uniform roughness. This method assumes the flow depth (or normal depth) and flow velocity remain constant throughout the channel reach for a given flow.

The charts in Figure III-3-34 and Figure III-3-35 can be used to obtain graphic solutions of Manning's equation for common ditch sections. For conditions outside the range of these charts or for more precise results, Manning's equation can be solved directly from its classic forms shown in Equations 7 and 8 Section 3.4.1.2.

Table III-3-25 provides a reference for selecting the appropriate "*n*" values for open channels. A number of engineering reference books, such as *Open-Channel Hydraulics* by V.T. Chow, may also be used as guides to select "*n*" values. Figure III-3-36 contains the geometric elements of common channel sections useful in determining area A, wetted perimeter WP, and hydraulic radius (R=A/WP).

If flow restrictions raise the water level above normal depth within a given channel reach, a *backwater condition* (or non-uniform flow) is said to exist. This condition can result from flow restrictions created by a downstream culvert, bridge, dam, pond, lake, etc., and even a downstream channel reach having a higher normal flow depth. If backwater conditions are found to exist for the design flow, a backwater profile must be computed to verify that the channel's capacity is still adequate as designed. The Direct Step or Standard Step backwater methods presented in this section can be used for this purpose.

3.4.3.6 Direct Step Backwater Method

The Direct Step Backwater Method can be used to compute backwater profiles on prismatic channel reaches (i.e. reaches having uniform cross section and slope) where a backwater condition or restriction to normal flow is known to exist. The method can be applied to a series of prismatic channel reaches in succession beginning at the downstream end of the channel and computing the profile upstream.

Calculating the coordinates of the water surface profile using the method is an iterative process achieved by choosing a range of flow depths, beginning at the downstream end, and proceeding incrementally up to the point of interest or to the point of normal flow depth. This is best accomplished by the use of a table (see Figure III-3-38) or computer programs.

$Q =$ _____			$n =$ _____			$S_o =$ _____			$\alpha =$ _____		$Y_n^{`} =$ _____	
y (1)	A (2)	R (3)	$R^{4/3}$ (4)	V (5)	$\alpha V^2/2g$ (6)	E (7)	ΔE (8)	S_f (9)	$\bar{S}_f$ (10)	$S_o - \bar{S}_f$ (11)	Δx (12)	x (13)

Figure III-3-37. Open Channel Flow Profile Computation

y (1)	A (2)	R (3)	$R^{4/3}$ (4)	V (5)	$\alpha V^2/2g$ (6)	E (7)	ΔE (8)	S_f (9)	$\bar{S}_f$ (10)	$S_o - \bar{S}_f$ (11)	Δx (12)	x (13)
6.0	72.0	2.68	3.72	0.42	0.0031	6.0031	-	0.00002	-	-	-	-
5.5	60.5	2.46	3.31	0.50	0.0040	5.5040	0.4990	0.00003	0.000025	0.00698	71.50	71.5
5.0	50.0	2.24	2.92	0.60	0.0064	5.0064	0.4976	0.00005	0.000040	0.00696	71.49	142.99
4.5	40.5	2.01	2.54	0.74	0.0098	4.5098	0.4966	0.00009	0.000070	0.00693	71.64	214.63
4.0	32.0	1.79	2.17	0.94	0.0157	4.0157	0.4941	0.00016	0.000127	0.00687	71.89	286.52
3.5	24.5	1.57	1.82	1.22	0.0268	3.5268	0.4889	0.00033	0.000246	0.00675	72.38	358.90
3.0	18.0	1.34	1.48	1.67	0.0496	3.0496	0.4772	0.00076	0.000547	0.00645	73.95	432.85
2.5	12.5	1.12	1.16	2.40	0.1029	2.6029	0.4467	0.00201	0.001387	0.00561	79.58	512.43
2.0	8.0	0.89	0.86	3.75	0.2511	2.2511	0.3518	0.00663	0.004320	0.00268	131.27	643.70

The step computations are carried out as shown in the above table. The values in each column of the table are explained as follows:

Col. 1. Depth of flow (ft) assigned from 6 to 2 feet

Col. 2. Water area (ft^2) corresponding to depth y in Col. 1

Col. 3 Hydraulic radius (ft) corresponding to y in Col. 1

Col. 4. Four-thirds power of the hydraulic radius

Col. 5. Mean velocity (fps) obtained by dividing Q (30 cfs) by the water area in Col. 2

Col. 6. Velocity head (ft)

Col. 7. Specific energy (ft) obtained by adding the velocity head in Col. 6 to depth of flow in Col. 1

Col. 8. Change of specific energy (ft) equal to the difference between the E value in Col. 7 and that of the previous step.

Col. 9. Friction slope S_f, computed from V as given in Col. 5 and $R^{4/3}$ in Col. 4

Col.10. Average friction slope between the steps, equal to the arithmetic mean of the friction slope just computed in Col. 9 and that of the previous step

Col.11. Difference between the bottom slope, S_o, and the average friction slope, S_f

Col.12. Length of the reach (ft) between the consecutive steps;
Computed by $\Delta x = \Delta E/(S_o - S_f)$ or by dividing the value in Col. 8 by the value in Col. 11

Col.13. Distance from the beginning point to the section under consideration. This is equal to the cumulative sum of the values in Col. 12 computed for previous steps.

There are a number of commercial software programs for use on personal computers that use variations of the Standard Step backwater method for determining water surface profiles. The most common and widely accepted program is called HEC-2, published and supported by the United States Army Corps of Engineers Hydraulic Engineering Center. It is the model required by FEMA for use in performing flood hazard studies for preparing flood insurance maps. Other programs include WSP-2, published by the SCS, and WSPRO or E-431, published by USGS.

Figure III-3-38. Direct Step Backwater Method – Example

Equating the total head at cross section 1 and 2, the following equation may be written:

$$S_0 \Delta x + y_1 + \alpha_1 \frac{V_1^2}{2g} = y_2 + \alpha_2 \frac{V_2^2}{2g} + S_f \Delta x \qquad \text{(equation 14)}$$

where, Δx = distance between cross sections (ft)

y_1, y_2 = depth of flow (ft at cross sections 1 and 2

V_1, V_2 = velocity (fps) at cross sections 1 and 2

α_1, α_2 = energy coefficient at cross sections 1 and 2

S_0 = bottom slope (ft/ft)

S_f = friction slope = $(n_2V_2)/2.21R^{1.33})$

g = acceleration due to gravity, (32.2 ft/sec^2)

If the specific energy E at any one cross-section is defined as follows:

$$E = y + \alpha \frac{V^2}{2g} \qquad \text{(equation 15)}$$

Assuming $\alpha = \alpha_1 = \alpha_2$ where α is the energy coefficient which corrects for the non-uniform distribution of velocity over the channel cross section, equations 14 and 15 can be combined and rearranged to solve for Δx as follows:

$$\Delta x = \frac{(E_2 - E_1)}{(S_0 - S_f)} = \frac{\Delta E}{(S_0 - S_f)} \qquad \text{(equation 16)}$$

Typically values of the energy coefficient α are as follows:

Channels, regular section	1.15
Natural streams	1.3
Shallow vegetated flood fringes (includes channel)	1.75

For a given flow, channel slope, Manning's "*n*," and energy coefficient α, together with a beginning water surface elevation y_2, the values of Δx may be calculated for arbitrarily chosen values of y_1. The coordinates defining the water surface profile are obtained from the cumulative sum of Δx and corresponding values of y.

The **normal flow depth y_n** should first be calculated from Manning's equation to establish the upper limit of the backwater effect.

3.4.3.7 Standard Step Backwater Method

The Standard Step Backwater Method is a variation of the Direct Step Backwater Method and can be used to compute backwater profiles on both prismatic and non-prismatic channels. In this method, stations are established along the channel where cross section data is known or has been determined through field survey. The computation is carried out in steps from station to station rather than throughout a given channel reach as is done in the Direct Step method. As a result, the analysis involves significantly more trial-and-error calculation in order to determine the flow depth at each station.

3.4.3.8 Computer Applications

There are several different computer programs capable of the iterative calculations involved for these analyses. The project engineer is responsible for providing information describing how the program was used, assumptions the program makes and descriptions of all variables, columns, rows, summary tables, and graphs. The most current version of any software program shall be used for analysis. Auburn may find specific programs not acceptable for use in design. Please check with Public Works, to confirm the applicability of a particular program prior to starting design.

3.4.3.9 Riprap Design[3]

Proper riprap design requires the determination of the median size of stone, the thickness of the riprap layer, the gradation of stone sizes, and the selection of angular stones, which will interlock when placed. Research by the U.S. Army Corps of Engineers has provided criteria for selecting the **median stone weight, W_{50}** (Figure III-3-39). If the riprap is to be used in a highly turbulent zone (such as at a culvert outfall, downstream of a stilling basin, at sharp changes in channel geometry, etc.), the median stone W_{50} should be increased from 200% to 600% depending on the severity of the locally high turbulence. The thickness of the riprap layer should generally be twice the **median stone diameter (D_{50})** or at least equivalent to the diameter of the maximum stone. The riprap should have a reasonably well-graded assortment of stone sizes within the following gradation:

$$1.25 \leq D_{max}/D_{50} \leq 1.50$$

$$D_{15}/D_{50} = 0.50$$

$$D_{min}/D_{50} = 0.25$$

Riprap Filter Design

Riprap should be underlain by a sand and gravel filter (or filter fabric) to keep the fine materials in the underlying channel bed from being washed through the voids in the riprap. Likewise, the filter material must be selected so that it is not washed through the voids in the riprap. Adequate filters can usually be provided by a reasonably well graded sand and gravel material where:

$$D_{15} < 5d_{85}$$

[3] From a paper prepared by M. Schaefer, Dam Safety Section, Washington State Department of Ecology.

The variable d_{85} refers to the sieve opening through which 85% of the material being protected will pass, and D_{15} has the same interpretation for the filter material. A filter material with a D_{50} of 0.5 mm will protect any finer material including clay. Where very large riprap is used, it is sometimes necessary to use two filter layers between the material being protected and the riprap.

Example:

What embedded riprap design should be used to protect a streambank at a level culvert outfall where the outfall velocities in the vicinity of the downstream toe are expected to be about 8 fps.

From Figure III-3-39, W_{50} = 6.5 lbs, but since the downstream area below the outfall will be subjected to severe turbulence, increase W_{50} by 400% so that:

$$W_{50} = 26 \text{ lbs}, D_{50} = 8.0 \text{ inches}$$

The gradation of the riprap is shown in Figure III-3-40, and the minimum thickness would be 1 foot (from Table III-3-26); however, 16 inches to 24 inches of riprap thickness would provide some additional insurance that the riprap will function properly in this highly turbulent area.

Figure III-3-40 shows that the gradation curve for ASTM C33, size number 57 coarse aggregate (used in concrete mixes), would meet the filter criteria. Applying the filter criteria to the coarse aggregate demonstrates that any underlying material whose gradation was coarser than that of concrete sand would be protected.

For additional information and procedures for specifying filters for riprap, refer to *the Army Corps of Engineers Manual EM 1110-2-1601 (1970), Hydraulic Design of Flood Control Channels*, Paragraph 14, “Riprap Protection.”

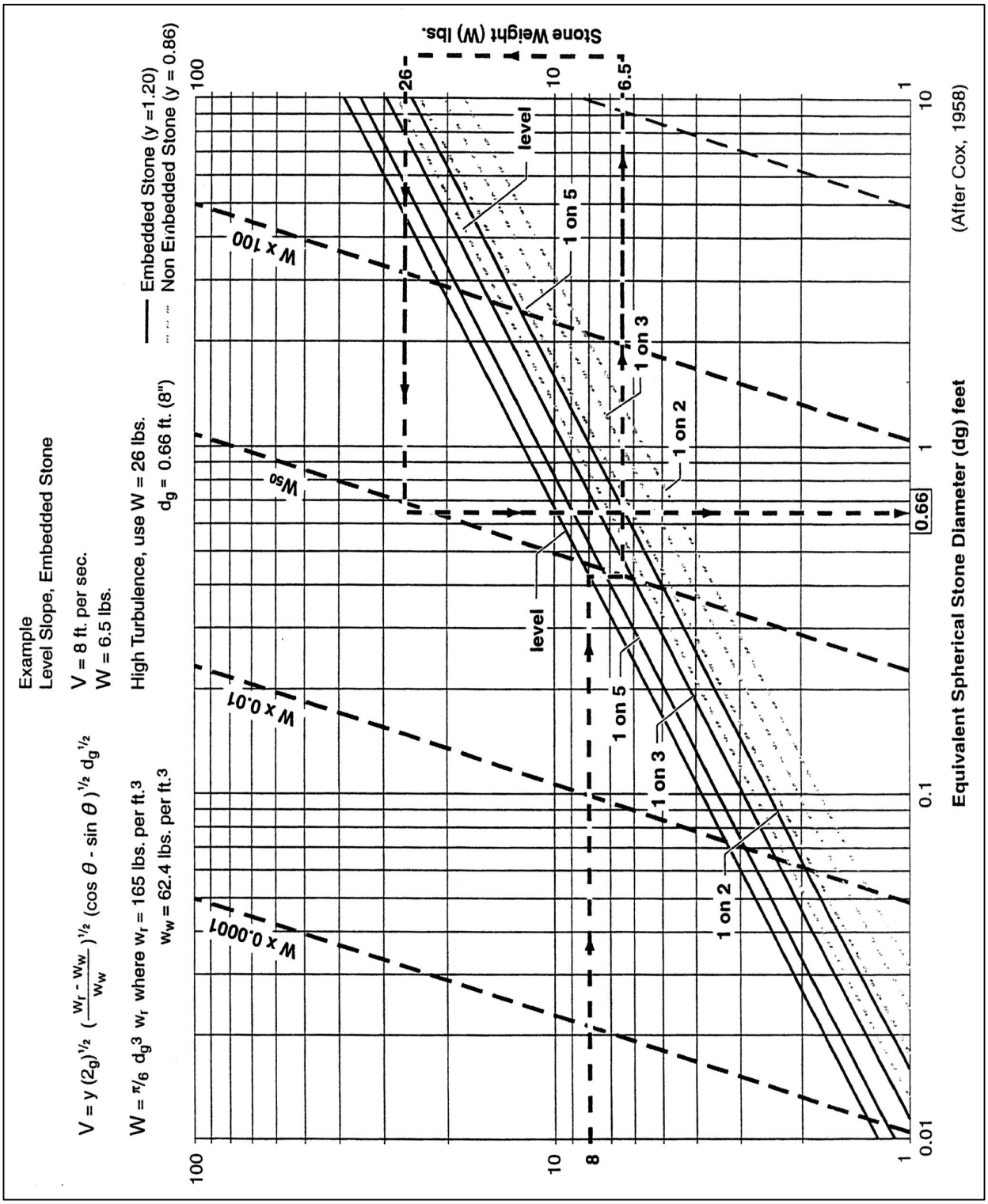

Figure III-3-39. Mean Channel Velocity vs Medium Stone Weight (W50) and Equivalent Stone Diameter

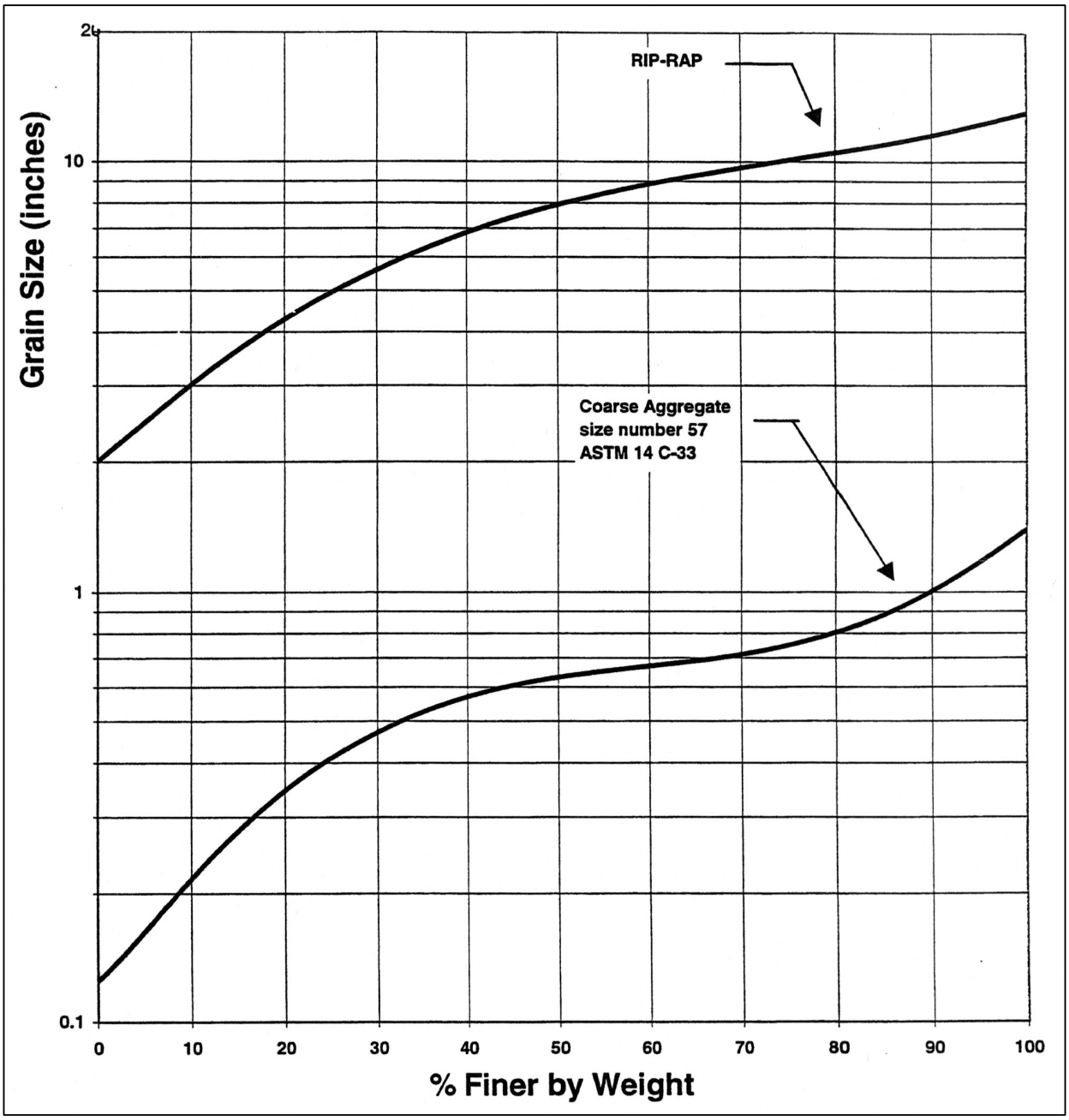

Figure III-3-40. Riprap Gradation Curve

3.5 Outfalls Systems

This section presents the methods, criteria and details for analysis and design of outfall systems. Properly designed outfalls are critical to reducing the chance of adverse impacts as the result of concentrated discharges from pipe systems and culverts, both onsite and downstream. Outfall systems include rock splash pads, flow dispersal trenches, gabion or other energy dissipaters, and tightline systems. A tightline system is typically a continuous length of pipe used to convey flows down a steep or sensitive slope with appropriate energy dissipation at the discharge end.

3.5.1 Outfall Design Criteria

All outfalls must be provided with an appropriate outlet / energy dissipation structure such as a dispersal trench, gabion outfall, or rock splash pad (see Figure III-3-41) as specified below and in Table III-3-27.

No erosion or flooding of downstream properties shall result from discharge from an outfall.

Table III-3-27. Rock Protection at Outfalls

Discharge Velocity at Design Flow in feet per second (fps)	Required Protection				
	Minimum Dimensions				
	Type	**Thickness**	**Width**	**Length**	**Height**
0 – 5	Rock lining[1]	1 foot	Diameter + 6 feet	8 feet *or* 4 x diameter, whichever is greater	Crown + 1 foot
>5 - 10	Riprap[2]	2 feet	Diameter + 6 feet *or* 3 x diameter, whichever is greater	12 feet *or* 4 x diameter, whichever is greater	Crown + 1 foot
>10 - 20	Gabion outfall	As required	As required	As required	Crown + 1 foot
>20	Engineered energy dissipater required				

[1] **Rock lining** shall be quarry spalls with gradation as follows:

Passing 8-inch square sieve:	100%
Passing 3-inch square sieve:	40 to 60% maximum
Passing ¾-inch square sieve:	0 to 10% maximum

[2] **Riprap** shall be reasonably well graded with gradation as follows:

Maximum stone size:	24 inches (nominal diameter)
Median stone size:	16 inches
Minimum stone size:	4 inches

Riprap sizing is based on outlet channel side slopes of approximately 3:1.

3.5.1.1 Energy dissipation

- For freshwater outfalls with a design velocity greater than 10 fps, a gabion dissipater or engineered energy dissipater may be required. The gabion outfall detail shown in Figure III-3-44 is illustrative only. A design engineered to specific site conditions must be developed.
- Engineered energy dissipaters, including stilling basins, drop pools, hydraulic jump basins, baffled aprons, and bucket aprons, are required for outfalls with design velocity greater than 20 fps. These should be designed using published or commonly known techniques found in such references as Hydraulic Design of Energy Dissipaters for Culverts and Channels, published by the Federal Highway Administration of the United States Department of Transportation; Open Channel Flow, by V.T. Chow; Hydraulic Design of Stilling Basins and Energy Dissipaters, EM 25, Bureau of Reclamation (1978); and other publications, such as those prepared by the Soil Conservation Service (now Natural Resource Conservation Service).
- Alternate mechanisms may be allowed with written approval of The City. Alternate mechanisms shall be designed using sound hydraulic principles with consideration of ease of construction and maintenance.
- Mechanisms that reduce velocity prior to discharge from an outfall are encouraged. Some of these are drop manholes and rapid expansion into pipes of much larger size. Other discharge end features may be used to dissipate the discharge energy. An example of an end feature is the use of a Diffuser Tee with holes in the front half, as shown in Figure III-3-45.

The in-stream sample gabion mattress energy dissipater may not be acceptable within the ordinary high water mark of fish-bearing waters or where gabions will be subject to abrasion from upstream channel sediments. A gabion basket located outside the ordinary high water mark should be considered for these applications.

3.5.1.2 Flow dispersion

- The flow dispersal trenches shown in Figure III-3-42 and Figure III-3-43 shall not be used unless both criteria below are met:
  - An outfall is necessary to disperse concentrated flows across uplands where no conveyance system exists and the natural (existing) discharge is unconcentrated; and
  - The 100-year peak discharge rate is less than or equal to 0.5 cfs.
- Flow dispersion may be allowed for discharges greater than 0.5 cfs, providing that adequate design details and calculations for the dispersal trench to demonstrate that discharge will be sheet flow are submitted and approved by The City.

- For the dispersion trenches shown in Figure III-3-42 and Figure III-3-43, a vegetated flowpath of at least 25 feet in length must be maintained between the outlet of the trench and any property line, structure, stream, wetland, or impervious surface. A vegetated flowpath of at least 50 feet in length must be maintained between the outlet of the trench and any steep slope. Sensitive area buffers may count towards flowpath lengths. For dispersion trenches discharging more than 0.5 cfs, additional vegetated flow path may be required.
- All dispersions systems shall be at least 10 feet from any structure or property line. If necessary, setbacks shall be increased from the minimum 10 feet in order to maintain a 1H:1V side slope for future excavation and maintenance.
- Dispersion systems shall be setback from sensitive areas, steep slopes, slopes 20% or greater, landslide hazard areas, and erosion hazard areas as governed by the Auburn City Code or as outlined in this manual, whichever is more restrictive.
- For sites with multiple dispersion trenches, a minimum separation of 10 feet is required between flowpaths. The City may require a larger separation based upon site conditions such as slope, soil type and total contributing area.
- Runoff discharged towards landslide hazard areas must be evaluated by a geotechnical engineer or a licensed geologist, hydrogeologist, or engineering geologist. The discharge point shall not be placed on or above slopes 20% (5H:1V) or greater or above erosion hazard areas without evaluation by a geotechnical engineer or qualified geologist and City approval.

Please refer to the Auburn City Code for additional requirements. ACC 16.10 Critical Areas may contain additional requirements depending upon the project proposal. A Hydraulic Project Approval (Chapter 77.55 RCW) and an Army Corps of Engineers permit may be required for any work within the ordinary high water mark.

Other provisions of that RCW or the Hydraulics Code - Chapter 220-110 WAC may also apply.

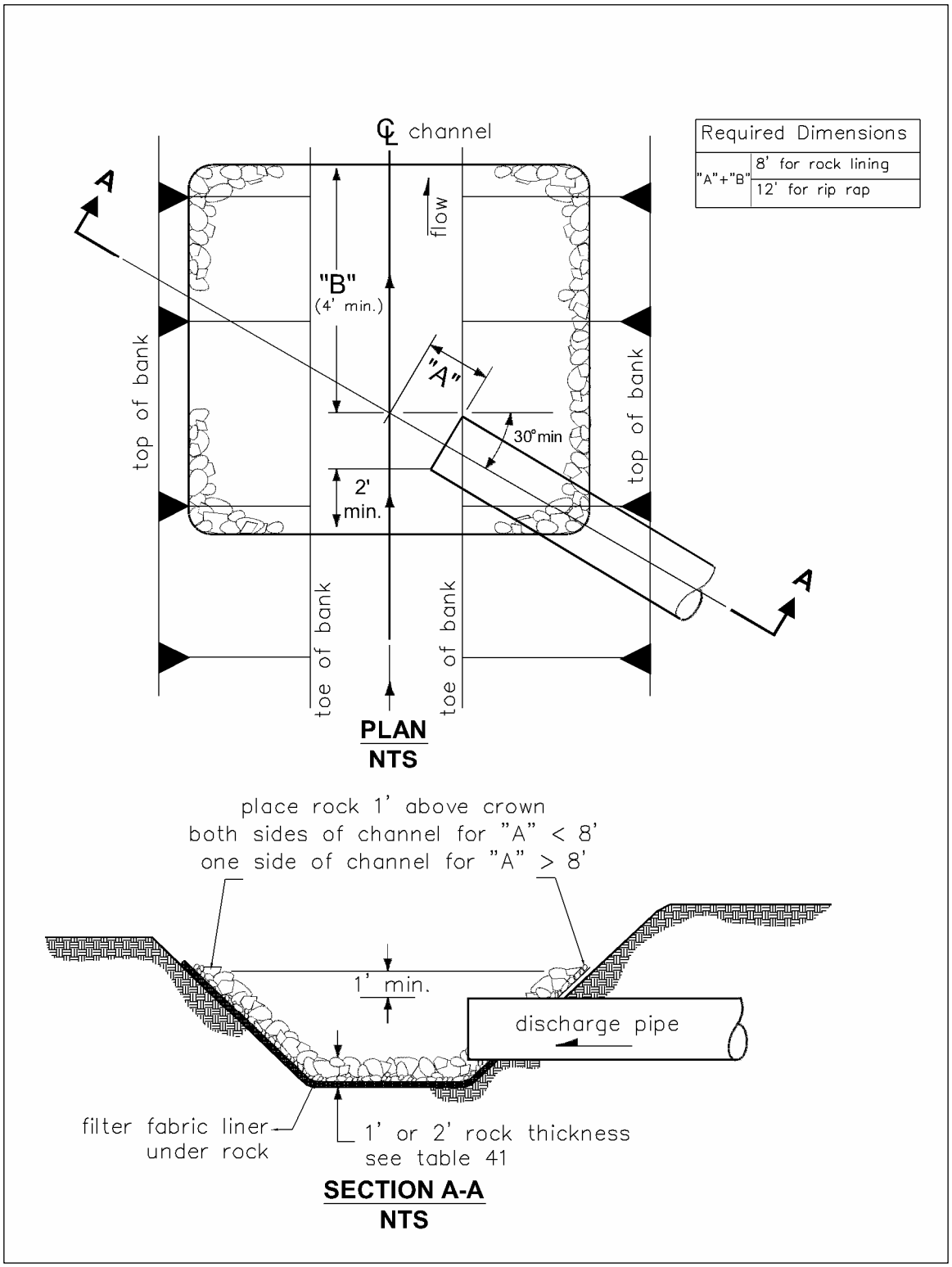

Figure III-3-41. Pipe/Culvert Outfall Discharge Protection

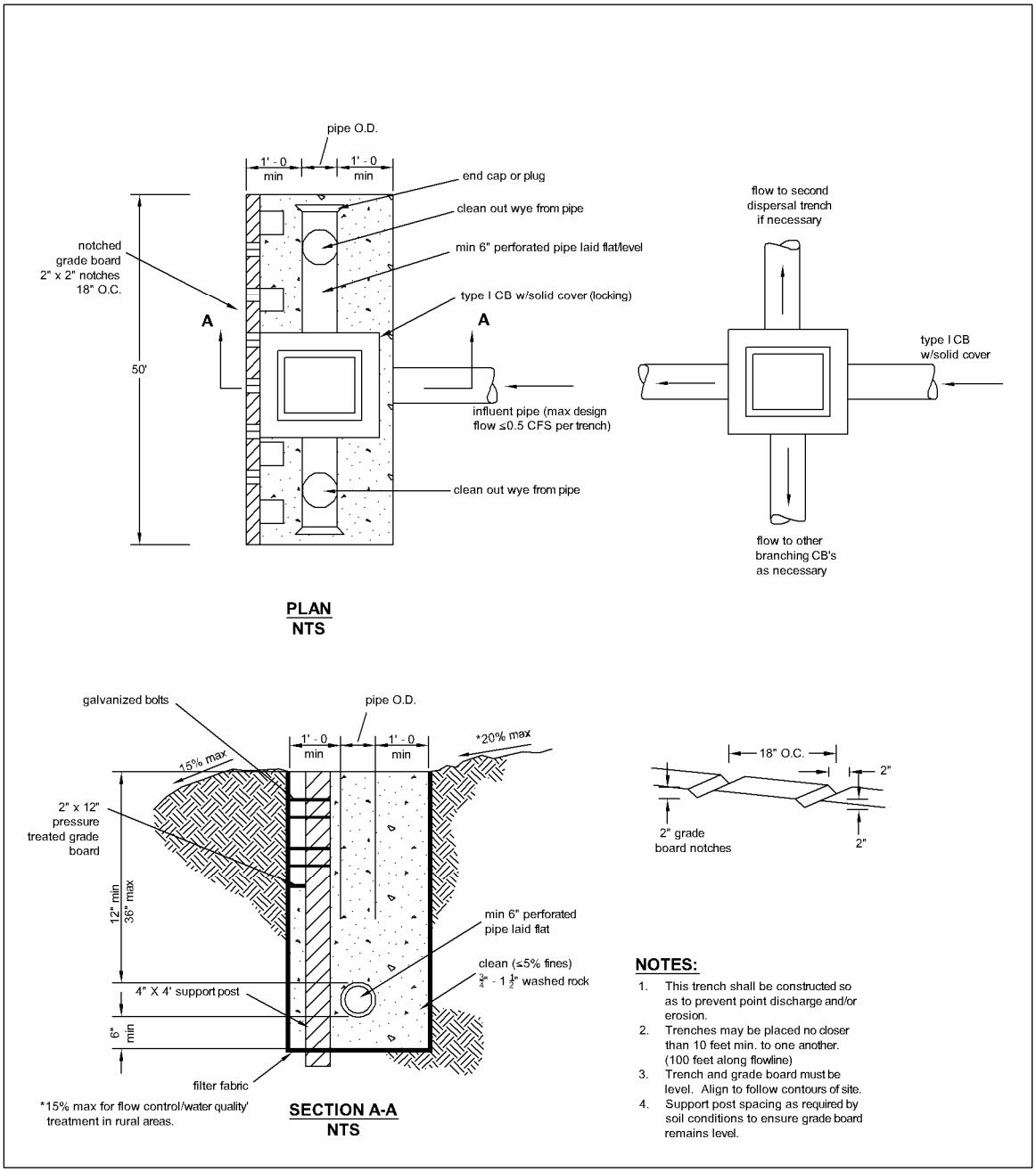

Figure III-3-42. Flow Dispersal Trench

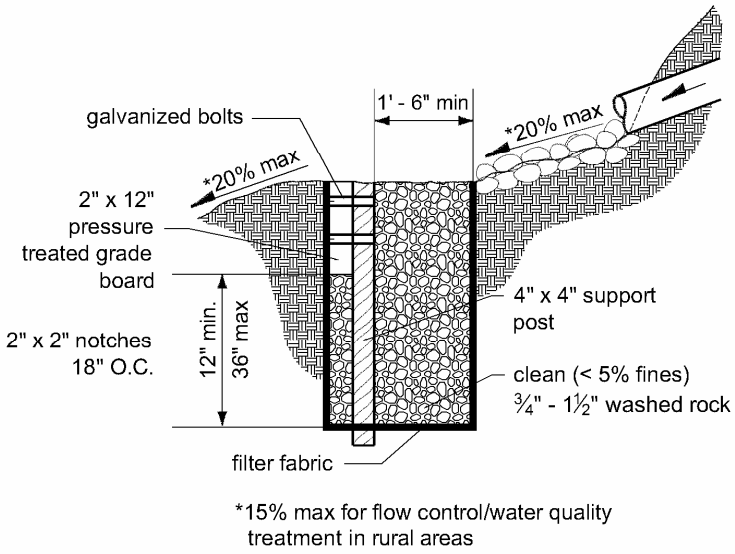

SECTION A-A
NTS

NOTES:

1. This trench shall be constructed so as to prevent point discharge and /or erosion.
2. Trenches may be placed no closer than 10 feet min. to one another. (100 feet along flowline)
3. Trench and grade board must be level. Align to follow contours of site.
4. Support post spacing as required by soil conditions to ensure grade board remains level.

Figure III-3-43. Alternative Flow Dispersal Trench

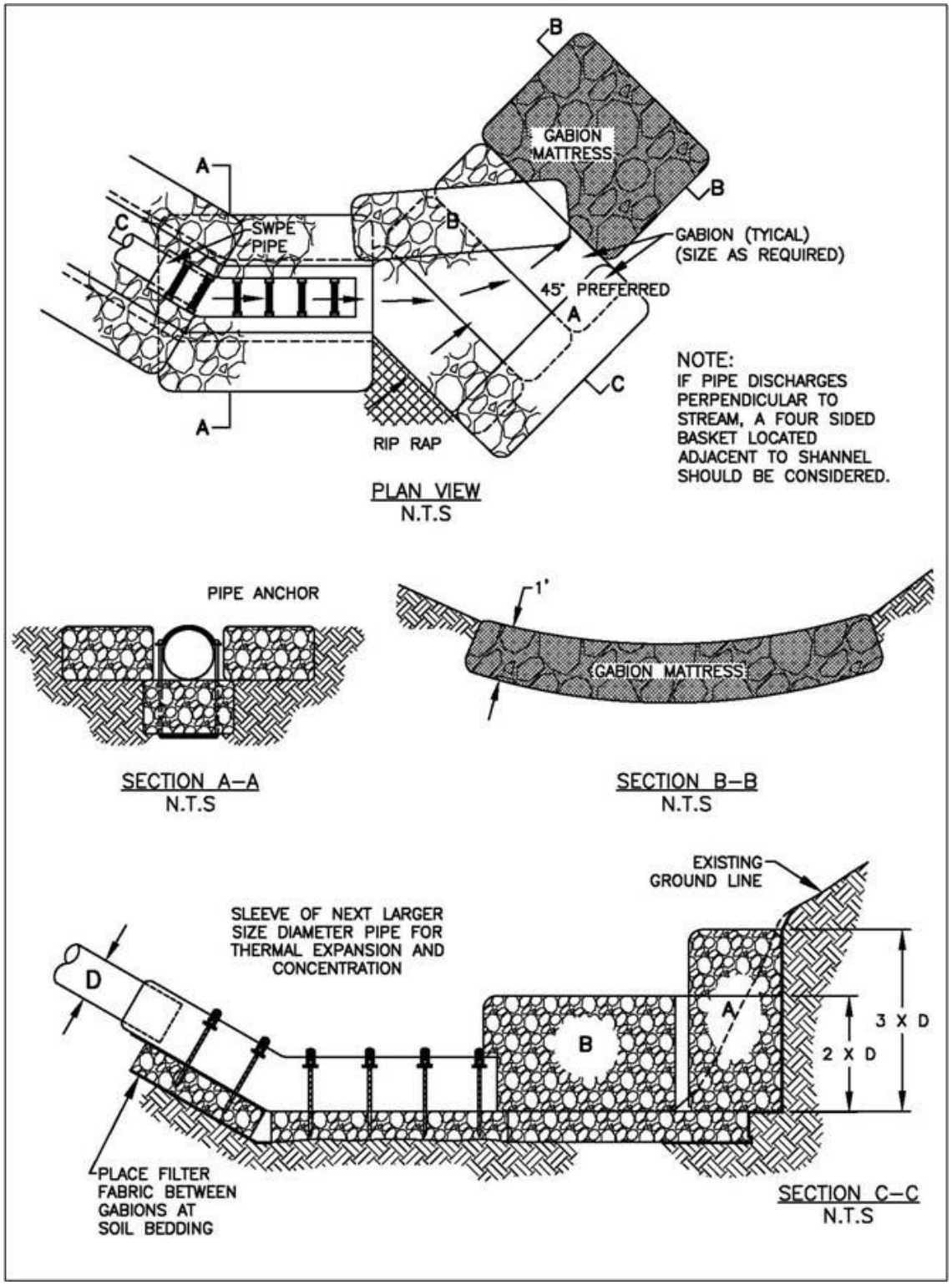

Figure III-3-44. Gabion Outfall Detail

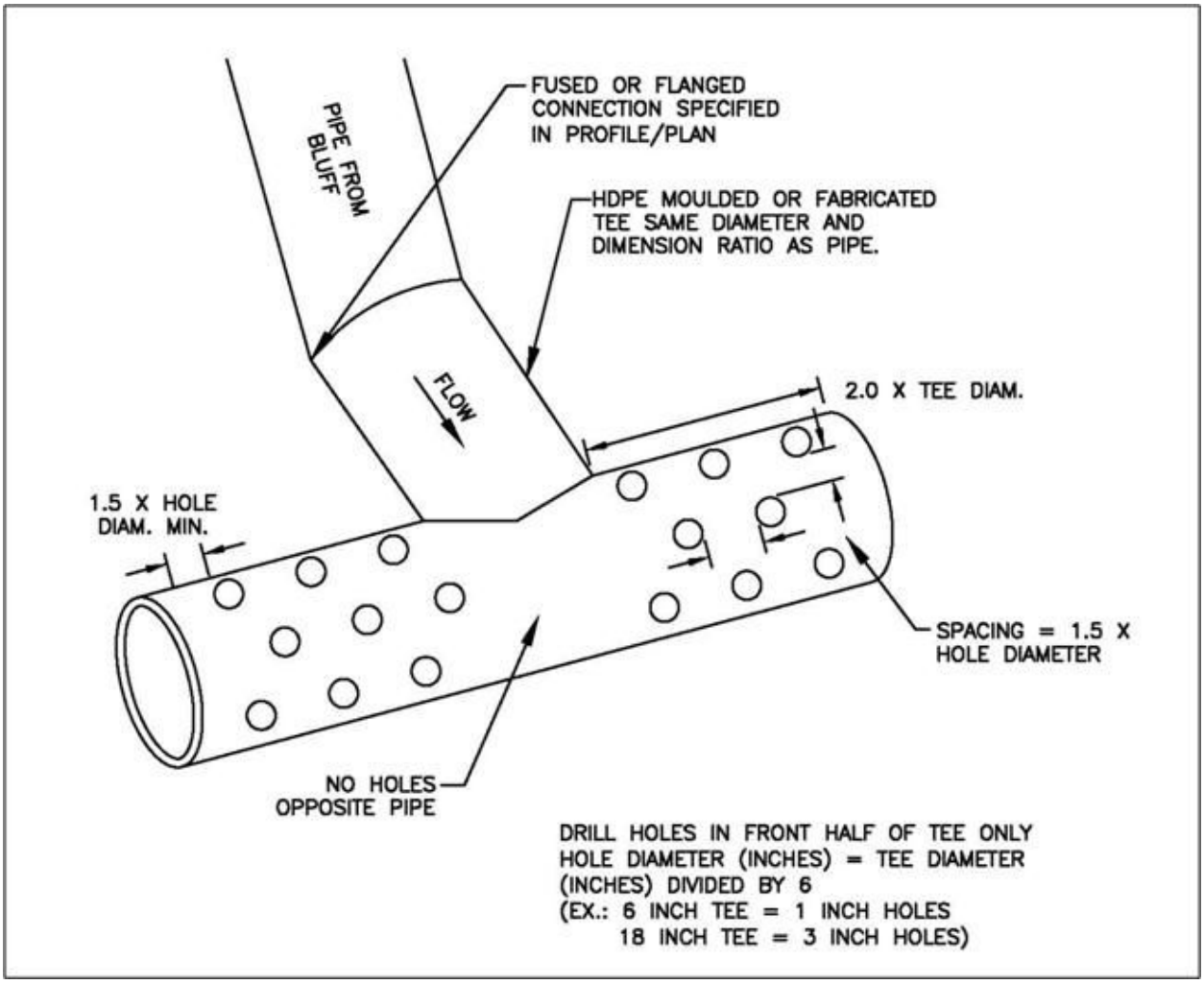

Figure III-3-45. Diffuser TEE (an example of energy dissipating end feature)

3.5.2 Tightline Systems

- Outfall tightlines may be installed in trenches with standard bedding on slopes up to 20%. In order to minimize disturbance to slopes greater than 20%, it is recommended that tightlines be placed at grade with proper pipe anchorage and support.
- High density polyethylene pipe (HDPP) tightlines must be designed to address the material limitations, particularly thermal expansion and contraction and pressure design, as specified by the manufacturer.
- Due to the ability of HDPP tightlines to transmit flows of very high energy, special consideration for energy dissipation must be made. Details of a sample gabion mattress energy dissipater have been provided as Figure III-3-44. Flows of very high energy will require a specifically engineered energy dissipater structure.
- Tightline systems may be needed to prevent aggravation or creation of a downstream erosion problem.
- Tightline systems shall have appropriate anchoring designed, both along the slope and to provide anchoring for the entire system.

3.5.3 Habitat Considerations

- New pipe outfalls can provide an opportunity for low-cost fish habitat improvements. For example, an alcove of low-velocity water can be created by constructing the pipe outfall and associated energy dissipater back from the stream edge and digging a channel, over widened to the upstream side, from the outfall to the stream. Overwintering juvenile and migrating adult salmonids may use the alcove as shelter during high flows. Potential habitat improvements should be discussed with the Washington Department of Fish and Wildlife biologist prior to inclusion in design.
- Bank stabilization, bioengineering and habitat features may be required for disturbed areas.
- Outfall structures should be located where they minimize impacts to fish, shellfish, and their habitats.
- The City's Critical Area Code may regulate activities in these areas.

3.6 Pump Systems

Pump systems are only allowed if applied for through the City's Exceptions process (see Volume I, Section 3.5). Feasibility of all other methods of gravity conveyance, infiltration and dispersion shall first be investigated and demonstrated to be infeasible in the following order of preference:

1. Infiltration of surface water on-site.
2. Dispersion of surface water on site.
3. Gravity connection to the City storm drainage system.
4. Pumping to a gravity system.

3.6.1 Design Criteria

If approved by the City Exceptions process (see Volume I, Section 3.5), the pump system must convey, at a minimum, the peak design flow for the 25-year 24-hour rainfall event. Pump capacity plus system storage or overflow, must convey or store the 100-year, 24-hour storm event.

3.6.2 Pump Requirements

If approved by the City Exemptions/Variance process, proposed pump systems must meet the following minimum requirements:

- The pump system shall be used to convey water from one location or elevation to another within the project site.
- The gravity-flow components of the drainage system to and from the pump system must be designed so that pump failure does not result in flooding of a building or emergency access or overflow to a location other than the natural discharge point for the project site.
- The pump system must have a dual pump (alternating) equipped with emergency back-up power OR a single pump may be provided without back-up power if the design provides the 100-year 24-hour storage volume.
- Pumps, wiring, and control systems shall be intrinsically safe per IBC requirements.
- All pump systems must be equipped with an external pump failure and high water alarm system.
- The pump system will serve only one lot or business owner.
- The pump system must be privately owned and maintained.
- The pump system shall not be used to circumvent any other City drainage requirements. Construction and operation of the pump system shall not violate any City requirements.

3.6.3 Additional Requirements

Private pumped stormwater systems will require the following additional items:

- Operations and Maintenance Manual describing the system itself and all required maintenance and operating instructions, including procedures to follow in the event of a power outage. All the requirements of Volume I, Section 4.1 shall be included in the O&M manual.
- Notice to Title on the property outlining that a private stormwater system is constructed on the site and that the maintenance of that system is the responsibility of the property owner. Wording of the Notice to Title shall be approved by the City prior to placing the Notice.
- Operations and Maintenance Agreement signed by the property owner and the City. After signature by the city, the agreement shall be recorded with the appropriate County and listed in the Notice of Title with the recording number.

All fees associated with preparing and recording documents and placing the Notice to Title shall be the responsibility of the applicant.

3.6.4 Sump Pumps

The above pump requirements do not apply to internal sump pumps. However, internal sump pumps **do require** a permit prior to connection to the City storm drainage system.

- Sump pumps shall be sized to properly remove water from basements and crawl spaces.
- Sump pumps shall NOT be connected to the sanitary sewer system.
- Consult the pump manufacturer or an engineer for appropriate sizing of a sump pump.

3.7 Easements and Access

All publicly owned, manmade drainage facilities and conveyances and all natural channels on the project site used for conveyance of altered flows due to development (including swales, ditches, stream channels, lake shores, wetlands, potholes, estuaries, gullies, ravines, etc.) shall be located within easements as required by the City.

3.7.1 Public Easements

A stormwater easement is required for the placement, operation and maintenance of facilities upon private property.

Public stormwater easements shall meet the following requirements:

- Public stormwater easements shall extend a minimum of seven and one-half feet (7 ½') to each side of the centerline of the storm pipe and seven and one-half (7 ½') beyond the outside extremity of a storm facility. Additional width may be required depending upon the depth and site topography.

- Public stormwater easements shall be provided on the City's standard easement form. Legal description of the easement and the property that the easement encumbers, along with a sketch showing both, shall be sealed by a licensed Land Surveyor and incorporated into the easement form as exhibits. The legal descriptions and sketch shall be on plain bond paper with margins acceptable to the County recording.

- Public stormwater easements shall be reviewed by the City and then recorded in the appropriate County prior to acceptance of the public storm system.

All pipes and channels must be located within the easement so that each pipe face or top edge of channel is no closer than 5 feet from its adjacent easement boundary. Pipes greater than 5 feet in diameter and channels with top widths greater than 5 feet shall be placed in easements adjusted accordingly, so as to meet the required dimensions from the easement boundaries.

The depth or proximity of steep slopes to the public system may necessitate a larger easement requirement for future excavation and maintenance purposes. See Table III-3-28 for appropriate widths based on depth of pipe.

Table III-3-28. Additional Storm Drain Easement Widths

INVERT DEPTH	WIDTH
< 10’	20’
10’ - 15’	25’
15’ - 20’	30’
> 20’	40’

Notes:

1. Greater width may be required for large diameter pipe or unfavorable site conditions.
2. Pipe shall be installed in center of easement.
3. If two pipes are to be installed in an easement, add 10 feet to the easement widths listed above. Use the deeper of the two pipes in selecting the easement width from this table. Install pipes with 10 feet of horizontal clearance between them.

3.7.2 Private Easements

Privately owned facilities shall be located in separate easements outside of dedicated public road right-of-way areas. **Private systems serving multiple lots require prior City approval.**

- A separate storm drainage detention or retention system is required for each commercial or industrial lot unless a combined storm drainage system is used for more than one lot. In such cases, a private cross drainage easement and maintenance agreement is required for each lot, unless cross drainage requirements are set up as a condition of the recorded final plat. Copies of the recorded easements or plat condition, including the stormwater pollution prevention plan must be provided to the City prior to civil plan approval.

- All projects shall execute with the City a standard Stormwater Easement and Maintenance Agreement for the site’s private storm drainage facilities. The easement shall be approved by the City and executed by the owner prior to issuance of occupancy permits for the development.

3.7.3 Maintenance Access

A minimum 15-foot wide access easement shall be provided to drainage facilities from a public street or right-of-way. Access easements shall be surfaced with a minimum 12-foot width of crushed rock, or other approved surface to allow year-round equipment access to the facility.

Maintenance access must be provided for all manholes, catch basins, vaults, or other underground drainage facilities operated by the City. Maintenance shall be through a public easement.

Maintenance access to privately maintained facilities may also be required.

THIS PAGE INTENTIONALLY LEFT BLANK.

Appendix A Auburn Design Storm

Table III-A-29. Design Storm Precipitation Values

Return Frequency 24-Hour Storm Event (Years)	Precipitation (Inches)
0.5	1.44
2	2.0
5	2.5
10	3.0
25	3.5
50	3.5
100	4.0

The depth of a 7-day, 100-year storm can be determined in one of three ways:

Use 12 inches for the lowland areas between sea level and 650 MSL.
Use the U.S. Department of Commerce Technical Paper No. 49, “Two- to Ten-Day Precipitation for Return Periods of 2 to 100 Years in the Contiguous United States.”
Use the U.S. Department of Commerce NOAA Atlas 2, “Precipitation Frequency Atlas of the Western United States,” Volume IX – Washington, 24-hour, 100-year Isopluvials and add 6.0 inches to the appropriate isopluvial for the project area.

Appendix B Procedure for Conducting a Pilot Infiltration Test

The Pilot Infiltration Test (PIT) consists of a relatively large-scale infiltration test to better approximate infiltration rates for design of stormwater infiltration facilities. The PIT reduces some of the scale errors associated with relatively small-scale double ring infiltrometer or "stove-pipe" infiltration tests. It is not a standard test but rather a practical field procedure recommended by Ecology's Technical Advisory Committee.

Infiltration Test

- Excavate the test pit to the depth of the bottom of the proposed infiltration facility. Lay back the slopes sufficiently to avoid caving and erosion during the test.
- The horizontal surface area of the bottom of the test pit should be approximately 100 square feet. For small drainages and where water availability is a problem smaller areas may be considered as determined by the site professional.
- Accurately document the size and geometry of the test pit.
- Install a vertical measuring rod (minimum 5-ft. long) marked in half-inch increments in the center of the pit bottom.
- Use a rigid 6-inch diameter pipe with a splash plate on the bottom to convey water to the pit and reduce side-wall erosion or excessive disturbance of the pond bottom. Excessive erosion and bottom disturbance will result in clogging of the infiltration receptor and yield lower than actual infiltration rates.
- Add water to the pit at a rate that will maintain a water level between 3 and 4 feet above the bottom of the pit. A rotometer can be used to measure the flow rate into the pit.

A water level of 3 to 4 feet provides for easier measurement and flow stabilization control. However, the depth should not exceed the proposed maximum depth of water expected in the completed facility.

Every 15 – 30 min, record the cumulative volume and instantaneous flow rate in gallons per minute necessary to maintain the water level at the same point (between 3 and 4 feet) on the measuring rod.

Add water to the pit until one hour after the flow rate into the pit has stabilized (constant flow rate) while maintaining the same pond water level (usually 17 hours).

After the flow rate has stabilized, turn off the water and record the rate of infiltration in inches per hour from the measuring rod data, until the pit is empty.

Data Analysis

Calculate and record the infiltration rate in inches per hour in 30 minutes or one-hour increments until one hour after the flow has stabilized.

Use statistical/trend analysis to obtain the hourly flow rate when the flow stabilizes. This would be the lowest hourly flow rate.

Apply appropriate correction factors for site heterogeneity, anticipated level of maintenance and treatment to determine the site-specific design infiltration rate (see Table III-2-9).

Example

The area of the bottom of the test pit is 8.5-ft. by 11.5-ft.

Water flow rate was measured and recorded at intervals ranging from 15 to 30 minutes throughout the test. Between 400 minutes and 1,000 minutes the flow rate stabilized between 10 and 12.5 gallons per minute or 600 to 750 gallons per hour, or an average of (9.8 + 12.3) / 2 = 11.1 inches per hour.

Applying a correction factor of 5.5 for gravelly sand in Table III-2-9 the design long-term infiltration rate becomes 2 inches per hour, anticipating adequate maintenance and pre-treatment.

THIS PAGE INTENTIONALLY LEFT BLANK.

Volume IV – Source Control Best Management Practices Table of Contents

Purpose of this Volume 457
Content and Organization of this Volume 457

Chapter 1 Frequently Asked Questions 458

1.1 Applicability 458
1.2 Pollutants of Concern 458
1.2.1 pH 458
1.2.2 Total Suspended Solids 458
1.2.3 Oils and Greases 458
1.2.4 Oxygen-demanding Substances 458
1.2.5 Metals 459
1.2.6 Bacteria and Viruses 459
1.2.7 Nutrients 459
1.2.8 Toxic Organic Compounds 459
1.2.9 Other Chemicals and Substances 459
1.3 Types of Source Control BMPs 460
1.3.1 Operational BMPs 460
1.3.2 Structural BMPs 460

Chapter 2 Worksheet for Commercial and Industrial Activities 461

Chapter 3 BMPs for Homeowners 465

3.1 Automobile Washing (for Single-Family Residences) 465
3.1.1 Suggested BMPs 465
3.1.1.1 At Home 465
3.1.1.2 Away from Home 466
3.2 Automobile Maintenance 466
3.2.1 Required BMPs 466
3.2.2 Suggested BMPs 466
3.3 Storage of Solid Wastes and Food Wastes 467
3.3.1 Suggested BMPs 467

3.4 Composting 467
3.4.1 Suggested BMPs 467
3.5 Yard Maintenance and Gardening 468
3.5.1 Required BMPs 468
3.5.2 Suggested BMPs 468
3.6 Swimming Pool and Spa Cleaning and Maintenance 469
3.6.1 Required BMPs 469
3.6.2 Suggested BMPs 469
3.7 Household Hazardous Material Use, Storage, and Disposal 469
3.7.1 Required BMPs 470
3.7.2 Suggested BMPs 470
3.8 General Home Maintenance 471
3.8.1 Suggested BMPs 471
3.9 Pet Waste 471
3.9.1 Suggested BMPs 471
Chapter 4 BMPs for Commercial and Industrial Activities 472
4.1 BMPs to Consider for all Activities 472
4.2 Cleaning and Washing Activities 473
4.2.1 BMP A101: Cleaning or Washing of Tools, Engines and Manufacturing Equipment 473
4.2.1.1 Description of Pollutant Sources 473
4.2.1.2 Pollutant Control Approach 473
4.2.1.3 Required BMPs 473
4.2.1.4 Recommended BMPs 474
4.2.2 BMP A102: Cleaning or Washing of Cooking Equipment 476
4.2.2.1 Description of Pollutant Sources 476
4.2.2.2 Pollutant Control Approach 476
4.2.2.3 Required BMPs 476
4.2.2.4 Recommended BMPs 477
4.2.3 BMP A103: Washing, Pressure Washing and Steam Cleaning of Vehicles/Equipment/Building Structures 478
4.2.3.1 Description of Pollutant Sources 478
4.2.3.2 Pollutant Control Approach 478
4.2.3.3 Required BMPs: 478
4.2.3.4 General 480
4.2.4 BMP A104: Collection and Disposal of Wastewater in Mobile Interior Washing Operations 481
4.2.4.1 Description of Pollutant Sources 481
4.2.4.2 Pollutant Control Approach 481
4.2.4.3 Required BMPs 481
4.2.4.4 Recommended BMPs 482

4.3 Transfer of Liquid or Solid Materials 483
4.3.1 BMP A201: Loading and Unloading Areas for Liquid or Solid Material 483
4.3.1.1 Description of Pollutant Sources 483
4.3.1.2 Pollutant Control Approach 483
4.3.1.3 Required BMPs 483
4.3.1.4 Recommended BMPs: 486
4.3.2 BMP A202: Fueling at Dedicated Stations 488
4.3.2.1 Description of Pollutant Sources 488
4.3.2.2 Pollutant Control Approach 488
4.3.2.3 Required BMPs: 488
4.3.3 BMP A203: Vehicle Maintenance Activities 494
4.3.3.1 Description of Pollutant Sources 494
4.3.3.2 Pollutant Control Approach 494
4.3.3.3 Required BMPs 494
4.3.3.4 Recommended BMPs 495
4.3.4 BMP A204: Mobile Fueling of Vehicles and Heavy Equipment 496
4.3.4.1 Description of Pollutant Sources 496
4.3.4.2 Pollutant Control Approach 496
4.3.4.3 Required BMPs 496
4.4 Production and Application Activities 499
4.4.1 BMP A301: Concrete and Asphalt Mixing and Production at Stationary Sites 499
4.4.1.1 Description of Pollutant Sources 499
4.4.1.2 Pollutant Control Approach 499
4.4.1.3 Required BMPs 499
4.4.1.4 Recommended BMPs 500
4.4.2 BMP A302: Concrete Pouring, Concrete Cutting, and Asphalt Application at Temporary Sites 501
4.4.2.1 Description of Pollutant Sources 501
4.4.2.2 Pollutant Control Approach 501
4.4.2.3 Required BMPs 501
4.4.2.4 Recommended BMPs 502
4.4.3 BMP A303: Manufacturing and Post-Processing of Metal Products 503
4.4.3.1 Description of Pollutant Sources 503
4.4.3.2 Pollutant Control Approach 503
4.4.3.3 Required BMPs 503
4.4.3.4 Recommended BMPs 504
4.4.4 BMP A304: Wood Treatment Areas 505
4.4.4.1 Description of Pollutant Sources 505
4.4.4.2 Pollutant Control Approach 505
4.4.4.3 Required BMPs 505
4.4.4.4 Recommended BMP 506

4.4.5 BMP A305: Commercial Composting 507
4.4.5.1 Description of Pollutant Sources 507
4.4.5.2 NPDES Permit Requirements 507
4.4.5.3 Pollutant Control Approach 507
4.4.5.4 Required BMPs 507
4.4.5.5 Recommended BMPs 508
4.4.6 BMP A306: Landscaping and Lawn/Vegetation Management 509
4.4.6.1 Description of Pollutant Sources 509
4.4.6.2 Pollutant Control Approach 509
4.4.6.3 Required BMPs for Landscaping 509
4.4.6.4 Recommended BMPs for Landscaping 509
4.4.6.5 Required BMPs for the Use of Pesticides 510
4.4.6.6 Recommended BMPs for the use of Pesticides 511
4.4.6.7 Required BMPs for Vegetation Management 512
4.4.6.8 Fertilizer Management: 512
4.4.6.9 Integrated Pest Management 513
4.4.7 BMP A307: Painting, Finishing and Coating of Vehicles, Boats, Buildings and Equipment 514
4.4.7.1 Description of Pollutant Sources 514
4.4.7.2 Pollutant Control Approach 514
4.4.7.3 Required BMPs 514
4.4.7.4 Recommended BMPs 515
4.4.8 BMP A308: Commercial Printing Operations 516
4.4.8.1 Description of Pollutant Sources 516
4.4.8.2 Pollutant Control Approach 516
4.4.8.3 Required BMPs 516
4.4.8.4 Recommended BMPs 516
4.4.9 BMP A309: Manufacturing Operations – Outside 517
4.4.9.1 Description of Pollutant Sources 517
4.4.9.2 Pollution Control Approach 517
4.4.9.3 Required BMPs 517
4.5 Storage and Stockpiling Activities 519
4.5.1 BMP A401: Storage or Transfer (Outside) of Solid Raw Materials, By-Products or Finished Products 519
4.5.1.1 Description of Pollutant Sources 519
4.5.1.2 Pollutant Control Approach 519
4.5.1.3 Required BMPs 519
4.5.1.4 Recommended BMPs 520
4.5.2 BMP A402: Storage and Treatment of Contaminated Soils 522
4.5.2.1 Description of Pollutant Sources 522
4.5.2.2 Pollutant Control Approach 522
4.5.2.3 Required BMPs 522
4.5.2.4 Recommended BMPs 522

4.5.3 BMP A403: Temporary Storage or Processing of Fruits or Vegetables 523
4.5.3.1 Description of Pollutant Sources 523
4.5.3.2 Pollutant Control Approach 523
4.5.3.3 Required BMPs 523
4.5.3.4 Recommended BMPs 524
4.5.4 BMP A404: Storage of Solid Wastes and Food Wastes 525
4.5.4.1 Description of Pollutant Sources 525
4.5.4.2 Pollutant Control Approach 525
4.5.4.3 Required BMPs 525
4.5.4.4 Recommended BMPs 526
4.5.5 BMP A405: Recyclers and Scrap Yards 527
4.5.5.1 Description of Pollutant Sources 527
4.5.5.2 Required BMPs 527
4.5.6 BMP A406: Treatment, Storage or Disposal of Dangerous Wastes 528
4.5.7 BMP A407: Storage of Liquid, Food Waste or Dangerous Waste Containers 529
4.5.7.1 Description of Pollutant Sources 529
4.5.7.2 Pollutant Control Approach 529
4.5.7.3 Required BMPs 529
4.5.8 BMP A408: Storage of Liquids in Above-Ground Tanks 532
4.5.8.1 Description of Pollutant Sources 532
4.5.8.2 Pollutant Control Approach 532
4.5.8.3 Required BMPs for All Tanks 532
4.5.8.4 Required BMPs for Single-walled Tanks 533
4.5.8.5 Recommended BMPs for Double-walled Tanks 533
4.5.9 BMP A409: Parking and Storage for Vehicles and Equipment 535
4.5.9.1 Description of Pollutant Sources 535
4.5.9.2 Required BMPs 535
4.6 Construction and Demolition Activities 536
4.6.1 BMP A501: Clearing, Grading and Preparation of Construction Sites 536
4.6.2 BMP A502: Demolition of Buildings 537
4.6.2.1 Description of Pollutant Sources 537
4.6.2.2 Pollutant Control Approach 537
4.6.2.3 Required BMPs 537
4.6.2.4 Recommended BMPs 537
4.6.3 BMP A503: Building, Repair, Remodeling and Construction 538
4.6.3.1 Description of Pollutant Sources 538
4.6.3.2 Pollutant Control Approach 538
4.6.3.3 Required BMPs 538
4.6.3.4 Recommended BMPs 539
4.7 Dust Control, and Soil and Sediment Control 540

4.7.1 BMP A601: Dust Control at Disturbed Land Areas and Unpaved Roadways and Parking Lots 540
4.7.1.1 Description of Pollutant Sources 540
4.7.1.2 Pollutant Control Approach 540
4.7.1.3 Required BMPs 540
4.7.1.4 Recommended BMPs for Roadways and Other Trafficked Areas: 540
4.7.1.5 Recommended BMPs for Dust Generating Areas: 541
4.7.2 BMP A602: Dust Control at Manufacturing Sites 542
4.7.2.1 Description of Pollutant Sources 542
4.7.2.2 Pollutant Control Approach 542
4.7.2.3 Required BMPs 542
4.7.2.4 Recommended BMPs 542
4.7.3 BMP A603: Soil Erosion and Sediment Control at Industrial Sites 543
4.7.3.1 Description of Pollutant Sources 543
4.7.3.2 Pollutant Control Approach 543
4.7.3.3 Required BMPs 543
4.8 Other Activities 544
4.8.1 BMP A701: Commercial Animal Handling Areas 544
4.8.1.1 Description of Pollutant Sources 544
4.8.1.2 Pollutant Control Approach 544
4.8.1.3 Required BMPs 544
4.8.2 BMP A702: Log Sorting and Handling 545
4.8.2.1 Description of Pollutant Sources 545
4.8.2.2 Ecology's Baseline General Permit Requirements 545
4.8.3 BMP A703: Boat Building, Maintenance and Repair 546
4.8.3.1 Description of Pollutant Sources 546
4.8.3.2 Pollutant Control Approach 546
4.8.3.3 Required BMPs 546
4.8.3.4 Recommended BMPs 547
4.8.4 BMP A704: Logging 549
4.8.4.1 Description of Pollutant Sources 549
4.8.4.2 Pollutant Control Approach 549
4.8.4.3 Required BMPs 549
4.8.4.4 Recommended BMPs 550
4.8.5 BMP A705: Mining and Quarrying of Sand, Gravel, Rock, Peat, Clay and Other Materials 551
4.8.5.1 Description of Pollutant Sources 551
4.8.5.2 Recommended BMPs 551
4.8.6 BMP A706: Swimming Pool and Spa Cleaning and Maintenance 552
4.8.6.1 Description of Pollutant Sources 552
4.8.6.2 Pollutant Control Approach 552
4.8.6.3 Required BMPs 552
4.8.6.4 Recommended BMP 552

4.8.7 BMP A707: De-Icing and Anti-Icing Operations for Streets & Highways 553
4.8.7.1 Description of Pollutant Sources 553
4.8.7.2 Required BMPs 553
4.8.7.3 Recommended BMPs 553
4.8.8 BMP A708: Roof and Building Drains at Manufacturing and Commercial Buildings 554
4.8.8.1 Description of Pollutant Sources 554
4.8.8.2 Pollutant Control Approach 554
4.8.8.3 Required BMPs 554
4.8.9 BMP A709: Urban Streets 555
4.8.9.1 Description of Pollutant Sources 555
4.8.9.2 Pollutant Control Approach 555
4.8.9.3 Recommended BMPs 555
4.8.10 BMP A710: Railroad Yards 557
4.8.10.1 Description of Pollutant Sources 557
4.8.10.2 Pollutant Control Approach 557
4.8.10.3 Required BMPs 557
4.8.11 BMP A711: Maintenance of Public and Utility Corridors and Facilities 558
4.8.11.1 Description of Pollutant Sources 558
4.8.11.2 Pollutant Control Approach 558
4.8.11.3 Required BMPs 558
4.8.11.4 Recommended BMPs 559
4.8.12 BMP A712: Maintenance of Roadside Ditches 560
4.8.12.1 Description of Pollutant Sources 560
4.8.12.2 Pollutant Control Approach 560
4.8.12.3 Required BMPs 560
4.8.12.4 Recommended BMPs 561
4.8.13 BMP A713: Maintenance of Stormwater Drainage and Treatment Facilities 562
4.8.13.1 Description of Pollutant Sources 562
4.8.13.2 Pollutant Control Approach 562
4.8.13.3 Required BMPs 562
4.8.14 BMP A714: Spills of Oil and Hazardous Substances 564
4.8.14.1 Description of Pollutant Sources 564
4.8.14.2 Pollutant Control Approach 564
4.8.14.3 Required BMPs 564
4.8.14.4 Recommended BMPs 565
4.8.15 BMP A715: Water Reservoir, Transmission Mainline, Wellhead, and Hydrant Flushing Activities 566
4.8.15.1 Description of Pollutant Sources 566
4.8.15.2 Pollutant Control Approach 566
4.8.15.3 Required BMPs 566
4.8.15.4 Recommended BMPs 566
4.8.16 BMP S101: Eliminate Illicit Storm Drainage System Connections 568
4.8.17 BMP S102: Dispose of Contaminated Stormwater and Waste Materials Properly 569

4.8.18 BMP S103: Discharge Process Wastewater to a Sanitary Sewer, Holding Tank, or Water Treatment System 570
4.8.19 BMP S108: Implement Integrated Pest Management Measures 571
4.8.20 BMP S109: Cleaning Catch Basins 572
4.9 Cover and Surround Activities 573
4.9.1 BMP S104: Cover the Activity with a Roof or Awning 573
4.9.2 BMP S105: Cover the Activity with an Anchored Tarp or Plastic Sheet 574
4.9.3 BMP S106: Pave the Activity Area and Slope to a Sump, Holding Tank, or Oil/Water Separator 575
4.9.4 BMP S107: Surround the Activity Area with a Curb, Dike, or Berm or Elevate the Activity 576
Chapter 5 Regulations and Requirements 580
5.1 City of Auburn Codes and Ordinances 580
5.2 State, Federal, and Other Regulations and Requirements 580
5.2.1 Washington State Department of Ecology Requirements for the Discharge of Process Wastewaters Directly to Surface Waters 580
5.2.2 Washington State Department of Ecology Requirements for Dangerous Waste Generators 581
5.2.3 Washington State Department of Ecology Stormwater NPDES Permit Requirements 581
5.2.4 Washington State Department of Ecology Requirements for Underground and Above Ground Storage Tanks 582
5.2.5 U.S. Environmental Protection Agency and Ecology Emergency Spill Cleanup Requirements 582
5.2.6 Washington State Department of Agriculture Pesticide Regulations 582
5.2.7 Puget Sound Clean Air Agency Air Quality Regulations 582
Appendix A Quick Reference Phone Numbers 583
Appendix B Recycling/Disposal of Vehicle Fluids and Other Wastes 584
Appendix C Example of an Integrated Pest Management Program (IPM) 585
Appendix D Recommendations for Management of Street Wastes 588

Volume IV

Volume IV: Source Control Best Management Practices

Purpose of this Volume

This volume was designed to help businesses, homeowners and public agencies in Auburn implement source control best management practices (BMPs) to prevent pollutants from contaminating stormwater runoff and entering our rivers, streams and groundwater.

Content and Organization of this Volume

Volume IV contains five chapters and four appendices.

- Chapter 1 provides an overview of who should use this volume and the type of pollutants being targeted.
- Chapter 2 provides a worksheet for commercial and industrial activity.
- Chapter 3 provides BMPs for single-family residences.
- Chapter 4 provides BMPs for commercial and industrial activities.
- Chapter 5 lists related regulations and requirements.
- Appendix A provides a list of phone numbers for related agencies.
- Appendix B lists recommended management procedures for the handling of hazardous wastes.
- Appendix C provides an example of an Integrated Pest Management program.
- Appendix D provides recommendations for the management of street wastes.

Chapter 1 Frequently Asked Questions

1.1 Applicability

The implementation of BMPs applies to all businesses, residences, and public agencies in Auburn.

1.2 Pollutants of Concern

The City is required to show progress in eliminating virtually all non-stormwater discharges to the storm drainage system. Only uncontaminated stormwater may be discharged to the City of Auburn storm drainage system. Illicit discharges, intentional or unintentional, are not allowed and polluters may be subject to state and federal penalties. It is the property owner's responsibility to keep pollutants from leaving a property and entering the City storm drainage system.

Pollutants can be placed into several broad categories, as listed below.

1.2.1 pH

The pH value of a substance is a relative measure of whether it is acidic or basic. Most aquatic species can only survive in neutral conditions. Sources that can contribute to a change in pH of stormwater and waterbodies include cement in concrete pouring, paving, and recycling operations; solutions from metal plating; chemicals from printing businesses and other industrial processes; and household cleaners such as bleaches and deck washes.

1.2.2 Total Suspended Solids

This represents particulate solids such as eroded soil, heavy metal precipitates, and biological solids which can cause sedimentation in streams and turbidity in receiving surface waters. Sediments can destroy the desired habitat for fish and can impact drinking water supplies. Sediment may be carried to streams, rivers and eventually to Puget Sound where they may be toxic to aquatic life and destroy habitat.

1.2.3 Oils and Greases

Oils and greases can be either petroleum-based or food-related sources. Petroleum-based compounds can be immediately toxic to fish and wildlife, and can destroy our drinking water aquifers. Food-based oils and greases can coat fish gills and insects, suffocating them. Oils and greases can clog conveyance systems, which may cause flooding.

1.2.4 Oxygen-demanding Substances

Degradable organic matter, such as yard, food, and pet wastes, and some chemical wastes, can have a drastic effect on water quality. These substances, when broken down by bacteria, consume the oxygen in the water. This stresses and can eventually kill fish and other creatures in the water.

1.2.5 Metals

Metals are utilized in many products important to our daily lives. Certain metals, known as heavy metals, wear off of our car brakes and tires, and come from the paint and moss-killing roof strips and herbicides we use at our homes. These metals can cause severe health and reproductive problems in fish and animals that live in water. Metals can be transported on sediments to waterbodies.

1.2.6 Bacteria and Viruses

Bacteria and viruses from pet wastes, failing septic systems and agricultural areas can contaminate drinking water and close down swimming and shellfish areas. A group of bacteria called fecal coliform bacteria are typically used as the indicators for all bacteria and viruses, so large amounts of fecal coliform may indicate serious problems.

1.2.7 Nutrients

In the context of water quality, nutrients are mainly compounds of nitrogen and phosphorus. When nutrients are allowed to enter waterbodies, undesirable effects such as algae overgrowth, oxygen depletion, channel clogging due to overgrowth of vegetation, and fish and animal death can occur. Sources of nutrients can include fertilizers, failing septic systems, and yard and animal wastes.

1.2.8 Toxic Organic Compounds

A number of organic chemicals are just plain toxic when they get into the aquatic environment. Pesticides, herbicides, rodenticides, and fungicides are deadly to aquatic life. Compounds such as antifreeze, wood preservatives, cleansers, and a host of other, more exotic organics derived from industries or past practices (such as polychlorinated biphenyls (PCBs), DDT, and chlordane) can also have detrimental effects on the environment.

1.2.9 Other Chemicals and Substances

There are a host of other chemicals that can cause problems if allowed to enter the aquatic environment. Common household bleach can be deadly to fish and other critters if drained directly to waterbodies. Diatomaceous earth backwash from swimming pool filters can clog gills and suffocate fish. Arsenic has been used in rat and mole killing compounds. Even those compounds classified as biodegradable or environmentally friendly can have immediate devastating effects on aquatic life.

1.3 Types of Source Control BMPs

As the name implies, source control BMPs prevent contamination from entering stormwater runoff by controlling them at the source. There are two categories of source control BMPs:

- Operational BMPs
- Structural BMPs

1.3.1 Operational BMPs

Operational source control BMPs are considered to be the most cost effective pollutant minimization practices. Operational source control BMPs are non-structural practices that prevent or reduce pollutants form entering stormwater. They can also include process changes such as raw material/product changes and recycling wastes.

Examples include:

- Formation of a pollution prevention team
- Good housekeeping practices
- Preventive maintenance procedures
- Spill prevention and cleanup
- Employee training
- Inspections of pollutant sources
- Record keeping

1.3.2 Structural BMPs

Structural source control BMPs are physical, structural or mechanical devices or facilities that are intended to prevent pollutants from entering stormwater.

Examples of structural source control BMPs typically include:

- Enclosing and/or covering the pollutant source, i.e., within a building or other enclosure, a roof over storage and working areas, a temporary tarp
- Physically segregating the pollutant source to prevent run-on of uncontaminated stormwater
- Devices that direct only contaminated stormwater to appropriate treatment BMPs, i.e. discharge to a sanitary sewer if allowed by the local sewer utility.

Chapter 2 Worksheet for Commercial and Industrial Activities

This worksheet is designed for use by business and industry operators. Complete the entire worksheet by checking the appropriate boxes for all activities that take place at the work site. If any of the activities as being performed outdoors, use the activity code on the worksheet to find the recommended BMPs contained in Chapter 4.

Activity Code (BMP)	TYPE OF ACTIVITY	Are you involved in this? If so, check if it occurs:	
		Indoors[1]	Outdoors[2]
SECTION A1 – CLEANING AND WASHING ACTIVITIES			
A101	Cleaning or Washing of Tools, Engines, and Manufacturing Equipment – includes parts washers and all types of manufactured equipment components.		
A102	Cleaning or Washing of Cooking Equipment – includes vents, filters, pots and pans, grills, and related items.		
A103	Washing, Pressure Washing, and Steam Cleaning of Vehicles/Equipment/Building Structures – covers cleaning and washing at all types of establishments, including fleet vehicle yards, car dealerships, car washes, and maintenance facilities.		
A104	Collection and Disposal of Wastewater from Mobile Interior Washing Operations – includes carpet cleaners, upholstery cleaners, and drapery cleaners.		
SECTION A2 – TRANSFERS OF LIQUID OR SOLID MATERIALS			
A201	Loading and Unloading Areas for Liquid or Solid Material – for loading and unloading of materials at industrial and commercial facilities		
A202	Fueling at Dedicated Stations – includes gas stations, pumps at fleet vehicle yards or shops, and other privately owned pumps.		
A203	Vehicle Maintenance Activities – covers oil changes and other engine fluids.		
A204	Mobile Fueling of Vehicles and Heavy Equipment – includes fleet fueling, wet fueling, and wet hosing		

[1] If any of these activities occur indoors, then BMPs are not required, provided no indoor drains or processes can ultimately contact stormwater or be transported to surface waters such as rivers and streams. Ensure that liquids, powders, dusts and fine granular materials stay confined indoors. Otherwise BMPs will be required.

[2] If any of these activities occur outdoors, then use the activity code to find the appropriate BMPs described in Chapter 4.

Activity Code (BMP)	TYPE OF ACTIVITY	Are you involved in this? If so, check if it occurs:	
		Indoors[1]	Outdoors[2]
SECTION A3 – PRODUCTION AND APPLICATION ACTIVITIES			
A301	Concrete and Asphalt Mixing and Production at Stationary Sites – applies to mixing of raw materials on-site to produce concrete or asphalt.		
A302	Concrete Pouring, Concrete Cutting, and Asphalt Application at Temporary Sites – includes construction sites, and driveway and parking lot resurfacing.		
A303	Manufacturing and Post-processing of Metal Products – includes machining, grinding, soldering, cutting, welding, quenching, rinsing, etc.		
A304	Wood Treatment Areas – includes wood treatment using pressure processes or by dipping or spraying.		
A305	Commercial Composting – includes commercial composting facilities operating outside.		
A306	Landscaping and Lawn/Vegetation Maintenance, Including Vegetation Removal, Herbicide and Insecticide Application, Fertilizer Application, Irrigation, Watering, Gardening, and Lawn Care – includes businesses involved in landscaping, applying pesticides and managing vegetation.		
A307	Painting, Finishing, and Coating of Vehicles, Boats, Buildings, and Equipment – includes surface preparation and the applications of paints, finishes, and/or coatings.		
A308	Commercial Printing Operations – includes materials used in the printing process.		
A309	Manufacturing Activities (Outside) - includes outdoor manufacturing areas.		
SECTION A4 – STORAGE ACTIVITIES			
A401	Storage or Transfer (Outside) of Solid Raw Materials, By-products, or Finished Products		
A402	Storage and Treatment of Contaminated Soils – applies to contaminated soils that are excavated and left on-site.		
A403	Temporary Storage or Processing of Fruits or Vegetables – includes processing activities at wineries, fresh and frozen juice makers, and other food and beverage processing operations.		
A404	Storage of Solid Wastes and Food Wastes – includes regular garbage and all other discarded non-liquid items.		
A405	Recyclers and Scrap Yards – includes scrapped equipment, vehicles, empty metal drums, and assorted recyclables.		

[1] If any of these activities occur indoors, then BMPs are not required, provided no indoor drains or processes can ultimately contact stormwater or be transported to surface waters such as rivers and streams. Ensure that liquids, powders, dusts and fine granular materials stay confined indoors. Otherwise BMPs will be required.

[2] If any of these activities occur outdoors, then use the activity code to find the appropriate BMPs described in Chapter 4.

Activity Code (BMP)	TYPE OF ACTIVITY	Are you involved in this? If so, check if it occurs:	
		Indoors[1]	Outdoors[2]
A406	Treatment, Storage, or Disposal of Dangerous Wastes – Refer to Ecology and the appropriate County Health Department for more information, see Chapter 6.		
A407	Storage of Liquid, Food Waste, or Dangerous Waste Containers – includes containers located outside a building and used for temporary storage		
A408	Storage of Liquids in Permanent Above-ground Tanks – includes all liquids in above-ground tanks		
A409	Parking and Storage for Vehicles and Equipment – includes public and commercial parking lots		
SECTION A5 – CONSTRUCTION ACTIVITIES			
A501	Clearing, Grading, and Preparation of Construction Sites – applies to land developing activities and to residential yard clearing and grading projects.		
A502	Demolition of Buildings – applies to removal of existing buildings and subsequent clearing of the rubble.		
A503	Building Repair, Remodeling, and Construction – applies to construction of buildings, general exterior building repair work and remodeling of buildings.		
SECTION A6 – DUST CONTROL AND SOIL AND SEDIMENT CONTROL			
A601	Dust Control at Disturbed Land Areas and Unpaved Roadways and Parking Lots		
A602	Dust Control at Manufacturing Sites – includes grain dust, sawdust, coal, gravel, crushed rock, cement, and boiler fly ash.		
A603	Soil Erosion and Sediment Control at Industrial Sites – includes industrial activities that take place on soil.		
SECTION A7 – OTHER ACTIVITIES			
A701	Commercial Animal Handling Areas – includes kennels, fenced pens, veterinarians, and businesses that board animals		
A702	Log Sorting and Handling – applies to log yards typically located at sawmills, ports, and pulp mills.		
A703	Boat building, Mooring, Maintenance, and Repair – includes all types of maintenance, repair, and building operations.		
A704	Logging – applies to logging activities that fall under Class IV general forest practices.		

[1] If any of these activities occur indoors, then BMPs are not required, provided no indoor drains or processes can ultimately contact stormwater or be transported to surface waters such as rivers and streams. Ensure that liquids, powders, dusts and fine granular materials stay confined indoors. Otherwise BMPs will be required.

[2] If any of these activities occur outdoors, then use the activity code to find the appropriate BMPs described in Chapter 4.

Activity Code (BMP)	TYPE OF ACTIVITY	Are you involved in this? If so, check if it occurs:	
		Indoors[1]	Outdoors[2]
A705	Mining and Quarrying of Sand, Gravel, Minerals, Peat, Clay, Rock, and Other Materials – does not include excavation at construction sites.		
A706	Swimming Pool and Spa Cleaning and Maintenance – includes every swimming pool and spa not at a single family residence. Commercial pool cleaners are included here for all pools.		
A707	Deicing and Anti-icing Operations for Airports and Streets -includes aircraft, runways/taxiways, streets and highways.		
A708	Roof and Building Drains at Manufacturing and Commercial Buildings – These sites will be referred to the Puget Sound Clean Air Agency.		
A709	Urban Streets – includes recommended BMPs.		
A710	Railroad Yards		
A711	Maintenance of Public and Private Utility Corridors and Facilities – includes public and private utility maintenance activities.		
A712	Maintenance of Roadside Ditches		
A713	Maintenance of Stormwater Drainage and Treatment Facilities		
A714	Spills of Oil and Hazardous Substances		
A715	Water Reservoir, Transmission Mainline, Wellhead, and Hydrant Flushing Activities		
SECTION S1 – SOURCE CONTROL BMPs			
S101	Eliminate Illicit Sewer to Storm Drainage System Connections		
S102	Dispose of Contaminated Stormwater and Waste Materials Properly		
S103	Discharge Process Wastewater to a Sanitary Sewer, Holding Tank, or Water Treatment System		
S104	Cover the Activity with a Roof of Awning		
S105	Cover the Activity with an Anchored Tarp or Plastic Sheet		
S106	Pave the Activity Area and Slope to a Sump or Holding Tank, or Oil/Water Generator		
S107	Surround the Activity Area with a Curb, Dike, or Berm or Elevate the Activity		
S108	Implement Integrated Pest Management Measures		
S109	Cleaning Catch Basins		

[1] If any of these activities occur indoors, then BMPs are not required, provided no indoor drains or processes can ultimately contact stormwater or be transported to surface waters such as rivers and streams. Ensure that liquids, powders, dusts and fine granular materials stay confined indoors. Otherwise BMPs will be required.

[2] If any of these activities occur outdoors, then use the activity code to find the appropriate BMPs described in Chapter 4.

Chapter 3 BMPs for Homeowners

Actions taken each day in and around homes have a profound effect on surface water quality and fish habitat in this region. Stormwater goes directly to rivers, streams and to Puget Sound. Stormwater does not go to the wastewater treatment plant. Any pollutants that get into the stormwater go directly to surface water. Small amounts of pollution from many different sources can significantly affect our waterways. Yard maintenance, waste storage, car washing and maintenance, and pool cleaning are some of the activities that can adversely impact water quality. The best management practices (BMPs) discussed in this section are practical ways to keep stormwater from becoming polluted in the first place. It is recommended that all residents in Auburn use these BMPs. Please note that some of these procedures are required by various state, or city laws, and are noted as required BMPs.

A general list of BMPs for homeowners is described in this chapter. Some of the BMPs described in Chapter 4 may also be applicable to homeowners.

- Section 3.1 – Automobile Washing
- Section 3.2 – Automobile Maintenance
- Section 3.3 – Storage of Solid Wastes and Food Wastes
- Section 3.4 – Composting
- Section 3.5 – Yard Maintenance and Gardening
- Section 3.6 – Swimming Pool and Spa Cleaning and Maintenance
- Section 3.7 – Household Hazardous Material Use, Storage, and Disposal
- Section 3.8 – General Home Maintenance

3.1 Automobile Washing (for Single-Family Residences)

Car washing at home will cause wash water to enter the storm system and flow untreated into surface waters. Soaps and detergents, even the biodegradable ones, can have immediate and long-term effects.

3.1.1 Suggested BMPs

3.1.1.1 At Home

- Wash cars directly over lawn areas or make sure the wash water drains to a vegetated area.
- Ideally, no soaps or detergents should be used, but if one is used, select one without phosphates.
- Consider using commercial products that allow cleaning a vehicle without water.
- Use a hose nozzle with a shut-off valve to save water.

- Do not wash cars if rain is expected.
- Pour the bucket of soapy, dirty wash water down your sink.

3.1.1.2 Away from Home

- Take cars to a commercial car wash that has a recycle system and discharges wastewater to the sanitary sewer for treatment.
- Go to fundraising car washes where sponsors use Auburn's Car Wash loaner kits. Use a Car Wash loaner kit. If your group is planning a car wash in Auburn, call (253) 931-3010 to get information about using a Car Wash loaner kit.

3.2 Automobile Maintenance

3.2.1 Required BMPs

- Recycle all oils, antifreeze, solvents, and batteries. Many local car parts dealers and gas stations accept used oil. The King County Household Hazardous Wastemobile makes regular, scheduled visits to Auburn and accepts oil, oil filters, antifreeze, and solvents, (website: http://www.govlink.org/hazwaste/house/disposal/AnyProduct.cfm?catID=974 or call 206-296-4692). Old batteries can actually be worth money. Recycle old batteries at automotive or battery shops.
- Never dump new or used automotive fluids or solvents on the ground, in a storm drain or street gutter, or in a waterbody.
- Do not mix wastes. Always keep your wastes in separate containers which are properly labeled and store them out of the weather.

3.2.2 Suggested BMPs

- Fix all leaks, to keep the leaky material off the streets and out of the surface water.
- To dispose of oil filters, punch a hole in the top and let drain for 24 hours. After draining, wrap in 2 layers of plastic and dispose of in your regular garbage or recycle by taking it to the King County Household Hazardous Waste Wastemobile. Pending State law may make disposal in your home garbage illegal, so please call the King County Household Hazards Line at (206) 296-4692 for up-to-date information.
- Use care in draining and collecting antifreeze to prevent accidental spills. Spilled antifreeze can be deadly to cats and dogs that ingest it.
- Perform service activities on concrete or asphalt or over a plastic tarp to make spill clean-up easier. Keep a bag of kitty litter on hand to absorb spills. Sprinkle a good layer on the spill, let it absorb and then sweep it up. Place the contaminated litter in a double plastic bag (bag in a bag), tie it up, and dispose of it in your regular garbage. Do not leave kitty litter out in the rain.
- If body work is performed outside, be sure to use a tarp to catch material resulting from grinding, sanding, and painting. Dispose of this waste by double bagging in plastic and placing in garbage.

3.3 Storage of Solid Wastes and Food Wastes

Improper storage of food and solid waste at residences can lead not only to water pollution problems, but problems with neighborhood pets and vermin as well. Following the BMPs listed below can help keep property a clean and healthy place to live.

3.3.1 Suggested BMPs

- All waste containers kept outside should have lids. If the hauler container lid is damaged, please call the City of Auburn Utilities at (253) 931-3038 for information on lid repair and replacement.
- Leaking waste containers should be replaced. If the container is damaged, please call City of Auburn Utilities at (253) 931-3038.
- Store waste containers under cover if possible, or on grassy areas.
- Inspect the storage area regularly to pick up loose scraps of material and dispose of them properly.
- Recycle as much as you can. The City of Auburn offers curbside recycling. Also, look under "Recycling" in the phone book for firms which take other recyclables or call the City of Auburn Solid Waste Division at (253) 931-3047.
- Purchase products which have the least amount of packaging materials.
- Recycle biodegradable materials such as grass clippings and vegetable scraps in your yard waste cart instead of throwing them away. Call the City of Auburn Utilities at (253) 931-3038 for more information on yard and food scrap recycling.

3.4 Composting

Composting is an earth-friendly activity as long as the rules outlined below are followed. The following BMPs are applicable to composting. For more information go to the City of Auburn's website at www.auburnwa.gov or call the City of Auburn Solid Waste Division at (253) 931-3047.

3.4.1 Suggested BMPs

- Locate compost bins on an unpaved area that is not prone to water ponding during storms, and well away from wetlands, streams, lakes and other drainage paths.
- Compost bins must be maintained and turned over regularly to work properly. Large piles of unattended compost may create odor and vermin problems and are not allowed within City limits.
- Do not put hazardous or non-decomposable waste in the bin.
- Cover the bin to keep excess water from cooling down the pile, which will slow down the rate of decomposition.
- An alternative to traditional backyard composting is worm composting. For more information on getting started with worm composting, call the City of Auburn Solid Waste Division at (253) 931-3047.

3.5 Yard Maintenance and Gardening

This section deals with the normal yard maintenance activities typically performed at residences. Overwatering, overfertilizing, improper herbicide application, and improper disposal of trimmings and clippings can all contribute to serious water pollution problems. Following the BMPs listed below will help alleviate pollutant runoff.

3.5.1 Required BMPs

Follow the manufacturer's directions exactly for mixing and applying herbicides, fungicides, and pesticides, and use them sparingly. Never apply when it is windy or when rain is expected. Never apply over water, within 100 feet of a well-head, or adjacent to streams, wetlands, or other waterbodies. Triple-rinse empty containers, using the rinsate for mixing your next batch of spray, and then double-bag and dispose of the empty container in your regular garbage. Never dispose of grass clippings or other vegetation in or near storm drains, streams, lakes, or Puget Sound.

3.5.2 Suggested BMPs

- Use natural, organic soil amendments. Visit www.kingcounty.gov/environment. Click on Composting, Natural Lawn Care for natural yard care information.
- Use an integrated pest management program (IPM), which is a natural, long-term, ecologically based approach to controlling pest populations. See Section 4.4.6 and Appendix C – Example of an Integrated Best Management Program.
- Follow manufacturer's directions when applying fertilizers. More is not better, either for your lawn or for local waterbodies. Never apply fertilizers over water or adjacent to ditches, streams, or other water bodies. Remember that organic fertilizers have a slow release of nitrogen, and less potential to pollute then synthetic fertilizers.
- Save water and prevent pollution problems by watering lawns sensibly. Lawns and gardens typically need the equivalent of 1-inch of rainfall per week. Put a wide mouth jar out where watering is occurring, and measure the water with a small plastic ruler. Overwatering to the point of runoff can carry polluting nutrients to the nearest waterbody.
- Consider using native plants as a vegetated buffer zone adjacent to streams or other water bodies. Call the Garden hotline at 206-633-0224 for advice and assistance in developing a planting plan or visit www.kingcounty.gov/Environment, Click on Compost, Plant Right for Your Site.
- Reduce the need for pesticides and fertilizers on lawns by improving the health of the soil. Aerating, thatching, and topdressing with compost will improve soil health and help wanted grasses compete with weeds and moss.
- Make sure all fertilizers and pesticides are stored in a covered location.
- Use a mulching mower and mow higher to improve soil/grass health and reduce or eliminate pesticide use.
- Compost all yard clippings, or use them as mulch to save water and keep down weeds in your garden. See Composting section for more information.

- Practice organic gardening and virtually eliminate the need to use pesticides and fertilizers. Contact King County Master Gardener Phone Clinic at 206-296-3440 for information and classes on earth-friendly gardening.
- Pull weeds instead of spraying and get some healthy exercise, too. If you must spray, use the least toxic formulations that will get the job done. The Master Gardener program listed above can help advise you on which spray to use.
- Work fertilizers into the soil instead of letting them lie on the ground surface exposed to the next rain storm.
- Plant vegetation suited to Northwest conditions because they require less water and fewer to no fertilizers and pesticides.
- The City of Auburn has a curbside yard waste recycling program. Call 253-931-3038 for more information.

3.6 Swimming Pool and Spa Cleaning and Maintenance

Despite the fact that we immerse ourselves in it, the water from pools and spas is far from chemically clean. Nutrients, pH, and chlorine can adversely affect fish and wildlife in waterbodies. Following these BMPs will ensure the cleanliness of your pool and the environment.

3.6.1 Required BMPs

- Pool and spa water must be dechlorinated if it is to be emptied into a ditch, on the ground or a lawn, or to the storm drainage system. Contact a pool chemical supplier to obtain the neutralizing chemicals needed. The rate of flow into the ditch or drainage system must be regulated so that it does not cause problems such as erosion, surcharging, or flooding. Contact the City of Auburn Strom Drainage Utility at 253-931-3010 for any conditions for discharge approval. Water discharged to the ground or a lawn must not cross property lines and must not produce runoff.
- If pool and spa water cannot be dechlorinated, it must be discharged to the sanitary sewer. Prior to draining a pool or spa, contact the City of Auburn Sanitary Sewer Utility at 253-931-3010 for any conditions for discharge approval. A pool service company can help determine the frequency of cleaning and backwash of filters.
- Diatomaceous earth used in pool filters cannot be disposed of in surface waters, on the ground, or into storm drainage systems or septic systems. Dry it out as much as possible, bag it in plastic, and dispose of at the landfill.

3.6.2 Suggested BMPs

- Hire a professional pool service company to collect all pool water for proper disposal. Make sure to ask where the water will be disposed of and ensure the proper permits have been obtained.

3.7 Household Hazardous Material Use, Storage, and Disposal

Oil-based paints and stains, paint thinner, gasoline, charcoal starter fluid, cleaners, waxes, pesticides, fingernail polish remover, and wood preservatives are just a few hazardous materials typically used in a residential setting.

When hazardous materials are dumped on the ground or in a storm drain, they can be washed directly to receiving waters where fish and wildlife can be harmed. Hazardous materials can also infiltrate into the ground and contaminate drinking water supplies. If disposed of with regular garbage, hazardous chemical containers can leak at the landfill and contaminate groundwater. Groundwater contamination can also occur if hazardous products are poured down a sink or toilet into a septic system. Do not pour hazardous chemicals down the drain if household plumbing is connected to municipal sewers, either. Many compounds will "pass through" the wastewater treatment plant without treatment and contaminate receiving waters, or they can harm the biological process used at the treatment plant, reducing overall treatment efficiency.

With such a diversity of hazardous products present in all homes in Auburn, a large potential for serious environmental harm exists if improper methods of storage, usage, and disposal are employed. Using the following BMPs will help keep these materials out of soils, sediments, and waters.

3.7.1 Required BMPs

- Hazardous materials must be stored out of the reach of children.
- Dispose of hazardous materials and their containers properly. Never dump products labeled as poisonous, corrosive, caustic, flammable, inflammable, volatile, explosive danger, warning, caution, or dangerous outdoors, in a storm drain, or into sinks, toilets or drains. Call the King County Hazardous Waste Line at 206-296-4692 or 1-888-TOXIC ED for information on disposal methods, collection events, and alternative products. Household hazardous wastes from City of Auburn residents are accepted at King County Household Hazardous Waste Facilities.

3.7.2 Suggested BMPs

- Check hazardous material containers frequently for signs of leakage. If a container is rusty and has the potential of leaking soon, place it in a secondary container before the leak occurs and prevent a clean-up problem.
- Store hazardous materials containers under cover and off the ground. Keep them out of the weather to avoid rusting, freezing, cracking, labels being washed off, etc.
- Keep appropriate spill cleanup materials on hand. Kitty litter is good for many oil-based spills.
- Ground cloths and drip pans must be used under any work outdoors which involves hazardous materials such as oil-based paints, stains, rust removers, masonry cleaners, and others bearing label warnings as outlined above.
- Latex paints are not a hazardous waste, but are not accepted in liquid form at the landfill. To dispose, leave uncovered in a protected place until dry, then place in the garbage. If you wish to dry waste paint quickly, just pour kitty litter in the can to absorb the paint. Once paint is dry, leave the lid off when you place it in the garbage so the garbage collector can see that it is no longer liquid.
- Use less toxic products whenever possible. The King County Household Hazards Line at 206-296-4692 or 1-888-TOXIC ED and the Washington Toxics Coalition at 206-632-1545 have information detailing alternatives to toxic products.

- If an activity involving the use of a hazardous material can be moved indoors out of the weather, then do so. Make sure proper ventilation is provided.
- Follow manufacturers' directions in the use of all materials. Over-application of yard chemicals, for instance, can result in the washing of these compounds into receiving waterbodies. Never apply pesticides when rain is expected.
- When hazardous materials are in use, place the container inside a tub or bucket to minimize spills.
- Purchase only the amount of product that is needed.

3.8 General Home Maintenance

This section deals with the normal maintenance activities typically performed in residential settings. Following the BMPs listed below will help alleviate pollutant runoff.

3.8.1 Suggested BMPs

Pressure washing of building facades, rooftops, pavement, and other large objects must be conducted in such a way that all of the runoff is collected for proper disposal. No runoff shall leave the site. Temporary curbs, dikes, or berms may be used to direct the water away from storm drains. Sweep up and collect debris for disposal as solid waste as an alternative to pressure washing.

Carpet cleaning wash water must be disposed of to the sanitary sewer. It is preferred that the dirty wash water be discharged into a toilet or mop sink at the place where it was generated.

Clean brushes and tools coated with non-water-based paints, finishes, or other materials in a manner that allow collection of used solvents (e.g. paint thinner, turpentine, xylol, etc.) for proper disposal at a Household Hazardous Waste Facility. Call the King County Household Hazards Line at 206-296-4692 or 1-888-TOXIC ED for information on disposal methods, collection events, and alternative products. Household hazardous wastes from City of Auburn residents are accepted at King County Household Hazardous Waste Facilities.

3.9 Pet Waste

Pets can generate pollutants from manure deposits, animal washing, and cage or kennel cleaning. Pollutants include bacteria which can pollute water ways and make people sick. To prevent pet waste pollutants from entering the storm drains, follow the BMPs listed below.

3.9.1 Suggested BMPs

- Regularly scoop, sweep and clean up pet waste deposited on walks and at home. Dispose of pet waste in the garbage or flush it down the toilet.
- When cleaning out cages and kennels, wash directly over lawn areas or make sure the wash water drains to a vegetated area. Alternately, dispose of the wash water down the toilet or a mop sink.

Chapter 4 BMPs for Commercial and Industrial Activities

This chapter coordinates with the worksheet completed in Chapter 2. That worksheet and the BMPs are organized by the different activities that businesses perform. If the listed activity is performed indoors and all discharges from the activity are controlled (e.g., process water, wash water, lubricants, solvents, fugitive dust, granular material, blowdown waste, etc.) such that no exposure to stormwater occurs, then no new BMPs for that activity are required. However, if the column for activities performed outdoors was checked, match the number from the worksheet to the activities listed in this section to find the BMPs suggested.

Contact the City's Storm Drainage Utility at 253-931-3010 for more information or technical assistance. Assistance can be provided over the phone or at on-site consultations.

Every person/business in Auburn is required to use BMPs as outlined in this manual. Utilizing additional BMPs to protect water further quality is encouraged.

Some businesses are or will be required to obtain a National Pollutant Discharge Elimination System (NPDES) permit for stormwater discharges. These permits are issued and regulated by the Washington State Department of Ecology.

There are several BMPs contained in this chapter that may also apply to residences and other non-commercial or non-industrial sites.

4.1 BMPs to Consider for all Activities

Some common best management practices that should be considered for all activities include:

- Avoid the activity or reduce its occurrence.
- Move the activity indoors if possible.
- Clean up spills quickly.
- Use less material.
- Use the least toxic materials available.
- Create and maintain vegetated areas near activity locations.
- Locate activities as far as possible from surface drainage paths.
- Keep storm drain systems clean.
- Reduce, reuse, and recycle as much as possible.
- Be an advocate for stormwater pollution prevention.
- Report violators to Storm Drainage Utility 253-931-3010.
- Provide oversight and training.
- Sweep or vacuum to control dust and debris.
- Regularly inspect, clean, and repair all facilities and BMPs.

4.2 Cleaning and Washing Activities

4.2.1 BMP A101: Cleaning or Washing of Tools, Engines and Manufacturing Equipment

4.2.1.1 Description of Pollutant Sources

This activity applies to businesses and public agencies that clean manufacturing equipment such as saws, grinders, screens, and other processing devices outside of buildings, and to businesses engaged in pressure washing of engines, equipment, and portable objects.

Pollutants sources include toxic hydrocarbons, organic compounds, oils and greases, nutrients, heavy metals, pH, suspended solids, biochemical oxygen demand (BOD), and chemical oxygen demand (COD).

4.2.1.2 Pollutant Control Approach

The preferred approach is to cover and/or contain the cleaning activity or conduct the activity inside a building, to separate the uncontaminated stormwater from the pollutant sources. Wash water must be conveyed to a sanitary sewer after approval by the City of Auburn, temporarily stored before proper disposal, or recycled, with no discharge to the ground, a storm drain, or surface water. Washwater may be discharged to the ground after proper treatment in accordance with *Ecology Guidance WQ-R-95-56, "Vehicle and Equipment Washwater Discharges," revised September 2007*. The quality of any discharge to the ground after proper treatment must comply with Ecology's Groundwater Quality Standards, Chapter 173-200 WAC. Contact the Ecology Southwest Regional Office for an NPDES Permit application for discharge of washwater to surface water or to a storm drain after on-site treatment.

4.2.1.3 Required BMPs

The following BMPs, or equivalent measures, are required of all businesses and public agencies engaged in cleaning or washing of tools, engines, equipment, and portable objects:

- Illicit connections to the storm drainage system must be eliminated. See BMP S101 for detailed information.
- Employees shall be educated to control washing operations to prevent stormwater contamination.
- All washwater must discharge to a holding tank, process treatment system, or sanitary sewer, never to the storm drain system. See BMP S103 for detailed information on how this must be accomplished.
- Pressure washing must be done in a designated area (such as a wash pad) provided with a sump drain and stormwater run-on prevention (Figure IV-4-1). See BMPs S106 and S107 for information on sumps (or holding tanks) and run-on prevention. Contact the City of Auburn Storm Drainage Utility at 253-931-3010 for washing operation policy.

Figure IV-4-1. Pressure Wash Water Recovery System

4.2.1.4 Recommended BMPs

The following BMPs are not required, but they can provide additional pollution control:

- If soaps or detergents are used, use the least toxic cleaner capable of doing the job. Use non-phosphate detergent, if possible, to reduce loadings at your local wastewater treatment plant.
- Limit the amount of water used in washing activities to reduce the potential of runoff carrying pollutants beyond the designated wash pad or capture system.
- Recycle washwater for subsequent washings.
- Implement one or more of the following stormwater treatment BMPs in addition to the Required BMPs:
    - Oil/water separator (do not use an oil/water separator for wash water containing soaps or detergents).
    - Wet vault for settling.
    - Infiltration basin.
    - Filtration with media designed for the pollutants present.
    - Catch basin with a filter insert for pressure washing to collect suspended solids.

- Catch basin filters and/or sorbent inserts should be selected based on the type of contaminants in the stormwater.

For discharging washwater containing soaps and detergents, the use of infiltration, biofiltration, wet ponds, and wetlands must not result in the violation of groundwater quality standards.

4.2.2 BMP A102: Cleaning or Washing of Cooking Equipment

4.2.2.1 Description of Pollutant Sources

This activity applies to businesses that clean cooking equipment such as vent filters, grills, hoods, and grease traps outside of buildings and clean paved areas and floor mats around cooking equipment.

Pollutants of concern consist of oil and grease, nutrients, suspended solids, biochemical oxygen demand (BOD) and chemical oxygen demand (COD)

4.2.2.2 Pollutant Control Approach

Businesses engaged in this activity that cannot connect discharges to a sanitary sewer, holding tank, or process water treatment system must contact the Department of Ecology and obtain a National Pollutant Discharge Elimination System (NPDES) wastewater permit.

4.2.2.3 Required BMPs

The following BMPs or equivalent measures are required of all businesses engaged in cleaning or washing of cooking equipment:

- Illicit connections to the storm drainage system must be eliminated. See BMP S101 for detailed requirements.
- Employees must be educated about the need to prevent stormwater contamination from washing operations.
- Washwater cannot be discharged to the storm drainage system.
- Paved washing areas must be swept daily to collect loose solid materials for proper disposal.
- Greasy buildup on cooking equipment must be removed and properly disposed of prior to washing to reduce the amount of material that can potentially contaminate runoff. Washing must either take place on a wash pad connected to the sanitary sewer, or the wastewater must be collected and disposed in the sanitary sewer.
- Move the activity indoors, into either an existing building or a newly constructed building or shed, with drainage to a sanitary sewer, holding tank, or process treatment system. See BMP S103 for further information on drainage alternatives. Any connection to the sanitary sewer requires the approval of the City of Auburn. If the washing activity cannot be moved indoors or contained in a tub, then the washing area must drain to a sanitary sewer, holding tank, or process treatment system, and provisions must be made to prevent stormwater run-on onto the washing area. See BMP S103 for detailed drainage requirements and BMP S107 for methods of run-on prevention. If discharging to a sanitary sewer, permits must be obtained from the City of Auburn Permit Center 253-931-3090.

OR

Use a tub or similar device to contain washwater. This water must be recycled for subsequent washing, or disposed into a holding tank or sanitary sewer.

- If a holding tank is used for storage of washwater, the contents must be pumped out before it is full and disposed of appropriately to a sanitary sewer or wastewater treatment system.

4.2.2.4 Recommended BMPs

The following BMPs are not required, but can provide additional pollution protection:

- A cover should be placed over a designated wash area to keep rain from falling on dirty equipment and producing contaminated runoff.
- Implement one or more of the following treatment BMPs in addition to the required BMPs:
  - Oil/water separator.
  - Wet vault for settling.
  - Infiltration basin with pretreatment.
  - Filtration with media designed for the pollutants present.

For discharging washwater containing soaps and detergents, the use of infiltration, biofiltration, wet ponds, and wetlands must not result in the violation of groundwater quality standards.

4.2.3 BMP A103: Washing, Pressure Washing and Steam Cleaning of Vehicles/Equipment/Building Structures

4.2.3.1 Description of Pollutant Sources

Vehicles, aircraft, vessels/boats, grocery carts, carpets, industrial equipment, and large buildings or structures may be commercially cleaned with low or high pressure water or steam. This also includes removing graffiti and "charity" car washes at gas stations and commercial parking lots. The cleaning can include hand washing, scrubbing, sanding, etc. Washwater from cleaning activities can contain oil and grease, suspended solids, heavy metals, soluble organics, soaps, and detergents that can contaminate stormwater.

4.2.3.2 Pollutant Control Approach

The preferred approach is to cover and/or contain the cleaning activity, or conduct the activity inside a building, to separate the uncontaminated stormwater from the pollutant sources. Washwater must be conveyed to a sanitary sewer after approval by the City of Auburn. See *Ecology guidance WQ-R-95-56, "Vehicle and Equipment Washwater Discharges," June 1995* for more information.

4.2.3.3 Required BMPs:

New and Used Car Dealer Lots

If washing is accomplished only with cold water and consists of washing only the outside of the motor vehicles, (no soaps or detergents used) there should be no discharge to the sanitary sewer. See Ecology guidance WQ-R-95-56, "Vehicle and Equipment Washwater Discharge", June 1995, for more information.

If soaps or detergents are to be used, washing must occur on a dedicated wash pad. Only the washing of the outside of the vehicles is permitted. The wash pad must be equipped with a catch basin/sediment trap that discharges through a tee outlet to the sanitary sewer. The tee outlet will allow containment of minor amounts of free-floating oil. Wastewater must meet local limitations on wastewater strength and quality. If engines and/or undercarriages are to be washed additional pretreatment will be required. Contact the City of Auburn Storm Drainage Utility at 253-931-3010 for further information. The facility will be inspected periodically by City staff.

Other Washing Events

Identify types of washing events and their locations (such as regional used car sales, RV shows, etc.) and evaluate options on a case-by-case basis according to the discharge criteria stated above.

Charity car washes should wash only the exterior of vehicles. If soap is used the wash water must be captured and directed to the sanitary sewer. For information concerning the use of charity car wash kits, contact City of Auburn Public Works Department at 253-931-3010.

Pressure washing of building facades, rooftops, pavement, and other large objects must be conducted in such a way that all of the runoff is collected for proper disposal. No runoff shall leave the site. Temporary curbs, dikes, or berms may be used to direct the water to a collection point or catch basins may be covered to help contain the water. The collected water, provided it meets local limits, should be disposed of to the sanitary sewer.

On a case by case basis, if runoff does not contain pollutants, following appropriate pretreatment, such as filtration or sedimentation, then this water may be allowed to be discharged to the storm drainage system. Contact the City of Storm Drainage Utility at 253-931-3010 for more information.

Automatic Car Wash

At a minimum, a catch basin/sediment trap that discharges through a tee outlet to the sanitary sewer is required. Other requirements may be necessary on a case-by-case basis.

Manual (Wand) Car Wash

There must be covered and bermed bays with a catch basin/sediment trap connected to a designed pretreatment device discharging to the sanitary sewer. At a minimum a coalescing plate oil water separator will be required. The facility will be inspected periodically by City staff.

Truck Washing Facilities

Wash on a concrete or asphalt paved dedicated wash pad with a catch basin/sediment trap connected to a designed pretreatment device, which discharges to the sanitary sewer. At a minimum a coalescing plate oil water separator will be required. The facility will be inspected periodically by City staff.

Mobile Vehicle Washers

The following summarizes the requirements for mobile vehicle and grocery cart washers doing work in the City of Auburn. Contact the City of Auburn Storm Drainage Utility at 253-931-3010 for more information.

Mobile vehicle washers must possess a current City of Auburn Business License and they must possess a Letter of Authorization issued by the City's Storm Drainage Utility.

Mobile Vehicle Washers must also:

- Discharge all wash water to the sanitary sewer;
- Submit MSDS sheets for all chemicals used;
- Obtain Source Control approval for any chemicals used; and
- Provide adequate means to prevent contaminated wash water from entering the storm drainage system or discharging onto unpaved ground.

Mobile vehicle washers may wash only the exteriors of the vehicles. Engine washing, cleaning the undercarriage or fifth wheel is strictly prohibited unless prior approval is received from the Storm Drainage Utility. Additional pretreatment may be required. Discharges from mobile washing must meet City of Auburn code requirement, Chapter 13.20 discharge limitations for pH.

Those washers employing the two-step (acid-alkaline) process must obtain approval from City of Auburn Sanitary Sewer Utility on a case-by-case basis. At a minimum, two-step washers must:

- Provide some means of holding and mixing the wash water generated;
- Provide an accepted means of testing the pH of the mixed wash water;
- Provide a means of adjusting the pH, if necessary, to within City of Auburn limits;
- Discharge the wastewater to the sanitary sewer; or
- Capture all of the water and dispose of it at a licensed treatment, storage, and disposal facility.

Mobile vehicle washers must discharge wash water to the sanitary sewer system through an on-site cleanout if available. Only wastewater generated within the City of Auburn may be discharged into the municipal sewer system.

4.2.3.4 General

Two-step washing may be allowed at all facilities discharging to the sanitary sewer. Provisions must be in place to neutralize the wash water rinsate prior to introduction into the sanitary sewer system.

For facilities with dedicated wash pads with either a catch basin with a tee discharge and/or pretreatment equipment, sampling and monitoring ports will be required. Additionally, the installation of a valve may be required to prevent discharge from the system in the event of a spill. All ports must be accessible for inspection and sampling at all times. Any equipment needed for access must be available at all times.

Any sampling and testing required of industry to verify pretreatment equipment performance shall be accomplished by using 40 CFR Part 136 approved methods. For Total Petroleum Hydrocarbons (TPH) EPA Method 1664 may be used.

Applicants requesting approval of designed oil/water separator systems must submit three (3) sets of plans.

4.2.4 BMP A104: Collection and Disposal of Wastewater in Mobile Interior Washing Operations

4.2.4.1 Description of Pollutant Sources

This activity applies to businesses that wash carpets and other interior items on a mobile site-to-site basis. The typical washing process includes use of machines that spray the wash water solution onto the carpet or upholstery and then suck the dirty solution up into a portable tank with limited capacity.

Pollutants of concern consist of nutrients, suspended solids, organic compounds (such as pesticides and chemicals used for flea and odor control), biochemical oxygen demand (BOD), and chemical oxygen demand (COD).

4.2.4.2 Pollutant Control Approach

Wastewater must be poured into a sanitary sewer drain at the site of collection, the business office, or at another proper location. If sanitary sewer disposal is not available or not allowed, the collected wastewater must be returned to the business site for process treatment or transfer to a holding tank.

4.2.4.3 Required BMPs

This BMP is required of all businesses doing mobile interior wash activities:

- Absolutely no wastewater from mobile interior wash activities shall be disposed of outdoors, or to a drain connected to the storm drainage system. This point must be made clear to all employees. Wastewater from mobile washing operations may be permitted for sanitary sewer disposal if it does not contain high concentrations of toxic materials. Some of the chemicals used for flea and odor control are listed by EPA as toxics. Contact the City of Auburn Sanitary Sewer Utility at 253-931-3010 if you intend to use and discharge these types of chemicals. All wastewater must be poured into a sanitary sewer drain at the site of collection, the business office, or at another proper location.
- If sanitary sewer disposal is not available or not allowed, the collected wastewater must be returned to the business site for process treatment or transfer to a holding tank. See BMP S103 for details on these drainage/disposal alternatives.

Carpet cleaning wash water must be disposed of to the sanitary sewer. It is preferred that the dirty wash water be discharged into a toilet or sink at the place where it was generated. Alternatively, the carpet cleaner may discharge the water into the sanitary sewer back at their place of business if located in Auburn. Otherwise, they must contact the sewerage agency providing their service for that agency's approval.

4.2.4.4 Recommended BMPs

The following BMPs are not required, but can provide additional pollution protection:

- Use the least toxic detergents and cleaners that will get the job done. Select non-phosphate detergents when possible.
- Limit the amount of water used in interior washing operations. This will save you time, money, and effort when it comes to proper disposal.
- Recycle washwater for more than one use.

4.3 Transfer of Liquid or Solid Materials

4.3.1 BMP A201: Loading and Unloading Areas for Liquid or Solid Material

4.3.1.1 Description of Pollutant Sources

Loading/unloading of liquid and solid materials at industrial and commercial facilities is typically conducted at shipping and receiving, outside storage, fueling areas, etc. Materials transferred can include products, raw materials, intermediate products, waste materials, fuels, scrap metals, etc. Leaks and spills of fuels, oils, powders, organics, heavy metals, salts, acids, alkalis, etc. during transfer are potential causes of stormwater contamination. Spills from hydraulic line breaks are a common problem at loading docks.

4.3.1.2 Pollutant Control Approach

Cover and contain the loading/ unloading area where necessary to prevent run-on of stormwater and runoff of contaminated stormwater.

4.3.1.3 Required BMPs

At All Loading/ Unloading Areas:

- A significant amount of debris can accumulate at outside, uncovered loading/unloading areas. Sweep these surfaces frequently to remove material that could otherwise be washed off by stormwater. Sweep outside areas that are covered for a period of time by containers, logs, or other material after the areas are cleared.
- Place drip pans or other appropriate temporary containment devices at locations where leaks or spills may occur such as hose connections, hose reels, and filler nozzles. Drip pans shall always be used when making and breaking connections (see Figure IV-4-2). Check loading/unloading equipment such as valves, pumps, flanges, and connections regularly for leaks and repair as needed. Frequent monitoring of drip pans is required to ensure captured materials are not displaced by wind or rainwater.

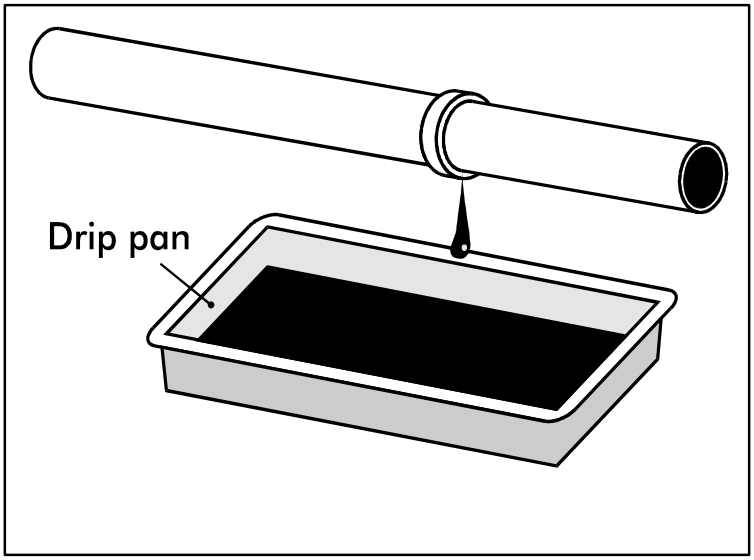

Figure IV-4-2. Drip Pan

At Tanker Truck and Rail Transfer Areas to Above/Below-ground Storage Tanks:

- To minimize the risk of accidental spillage, prepare an "Operations Plan" that describes procedures for loading/unloading. Train the employees, especially fork lift operators, in its execution and post it or otherwise have it readily available to employees.
- Report spills of reportable quantities to Ecology's Northwest Regional Office 425-649-7000.
- Prepare and implement an Emergency Spill Cleanup Plan for the facility (BMP A714 Spills of Oil and Hazardous Substances) which includes the following BMPs:
  - Ensure the clean up of liquid/solid spills in the loading/unloading area immediately if a significant spill occurs, upon completion of the loading/unloading activity, or at the end of the working day.
  - Retain and maintain an appropriate oil spill cleanup kit on-site for rapid cleanup of material spills (see BMP A714 Spills of Oil and Hazardous Substances).
  - Ensure that an employee trained in spill containment and cleanup is present during loading/unloading.

At Rail Transfer Areas to Above/Below-ground Storage Tanks:

Install a drip pan system as illustrated (see Figure IV-4-3) within the rails to collect spills/leaks from tank cars and hose connections, hose reels, and filler nozzles.

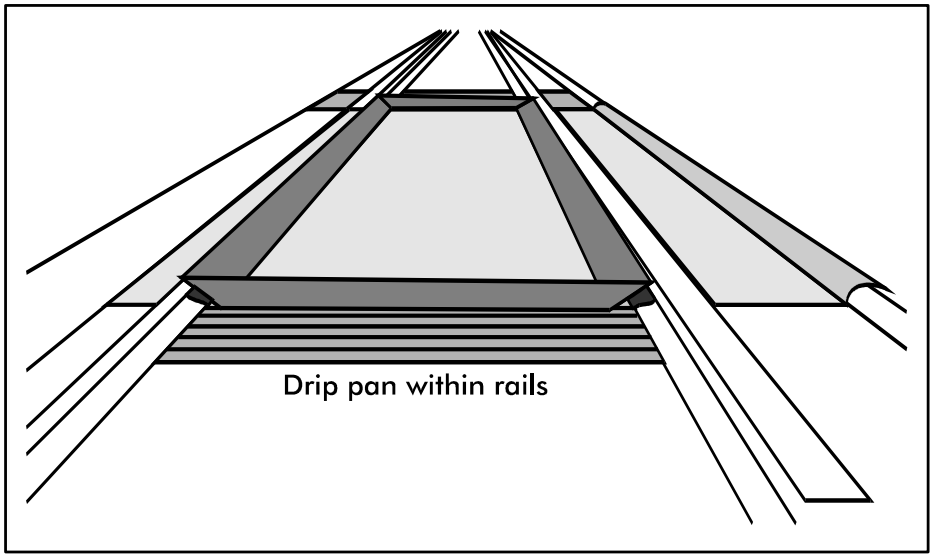

Figure IV-4-3. Drip Pan Within Rails

Loading/Unloading from/to Marine Vessels:

Facilities and procedures for the loading or unloading of petroleum products must comply with Coast Guard requirements.

Transfer of Small Quantities from Tanks and Containers:

Refer to BMPs A408 Storage of Liquids in Permanent Above-Ground Tanks and A407 Storage of Liquid, Food Waste, or Dangerous Waste Containers for requirements on the transfer of small quantities from tanks and containers, respectively.

At All Loading/ Unloading Areas:

- Consistent with Uniform Fire Code requirements and to the extent practicable, conduct unloading or loading of solids and liquids in a manufacturing building or under a roof, lean-to, or other appropriate cover.
- Berm, dike, and/or slope the loading/unloading area to prevent run-on of stormwater and to prevent the runoff or loss of any spilled material from the area.
- Large loading areas frequently are not curbed along the shoreline. As a result, stormwater passes directly off the paved surface into surface water. Place curbs along the edge, or slope the edge such that the stormwater can flow to an internal storm drain system that leads to an approved treatment BMP.
- Pave and slope loading/unloading areas to prevent the pooling of water. The use of catch basins and drain lines within the interior of the paved area must be minimized as they will frequently be covered by material, or they shall be placed in designated “alleyways” that are not covered by material, containers, or equipment.

4.3.1.4 Recommended BMPs:

- For the transfer of pollutant liquids in areas that cannot contain a catastrophic spill, install an automatic shutoff system in case of unanticipated off-loading interruption (e.g. coupling break, hose rupture, overfill, etc.).

At Loading and Unloading Docks:

- Install/maintain overhangs or door skirts that enclose the trailer end (see Figure IV-4-4 and Figure IV-4-5) to prevent contact with rainwater.
- Design the loading/unloading area with berms, sloping, etc. to prevent the run-on of stormwater.
- Retain on-site the necessary materials for rapid cleanup of spills.

At Tanker Truck Transfer Areas to Above/Below-Ground Storage Tanks:

- Pave the area on which the transfer takes place. If any transferred liquid, such as gasoline, is reactive with asphalt, pave the area with Portland cement concrete.
- Slope, berm, or dike the transfer area to a dead-end sump, spill containment sump, spill control (SC) oil/water separator, or other spill control device. The minimum spill retention time should be 15 minutes at the highest fuel dispenser nozzle through-put rate or the peak flow rate of the 6-month, 24-hour storm event over the surface of the containment pad, whichever is greater. The volume of the spill containment sump should be a minimum of 50 gallons with an adequate grit sedimentation volume.

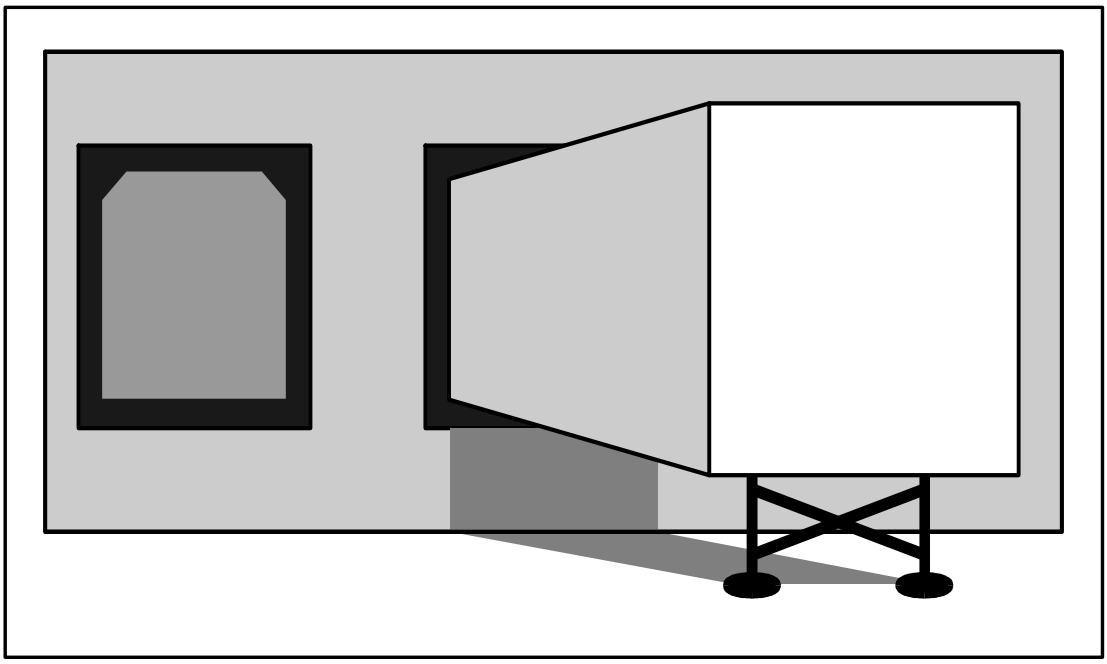

Figure IV-4-4. Loading Dock with Door Skirt

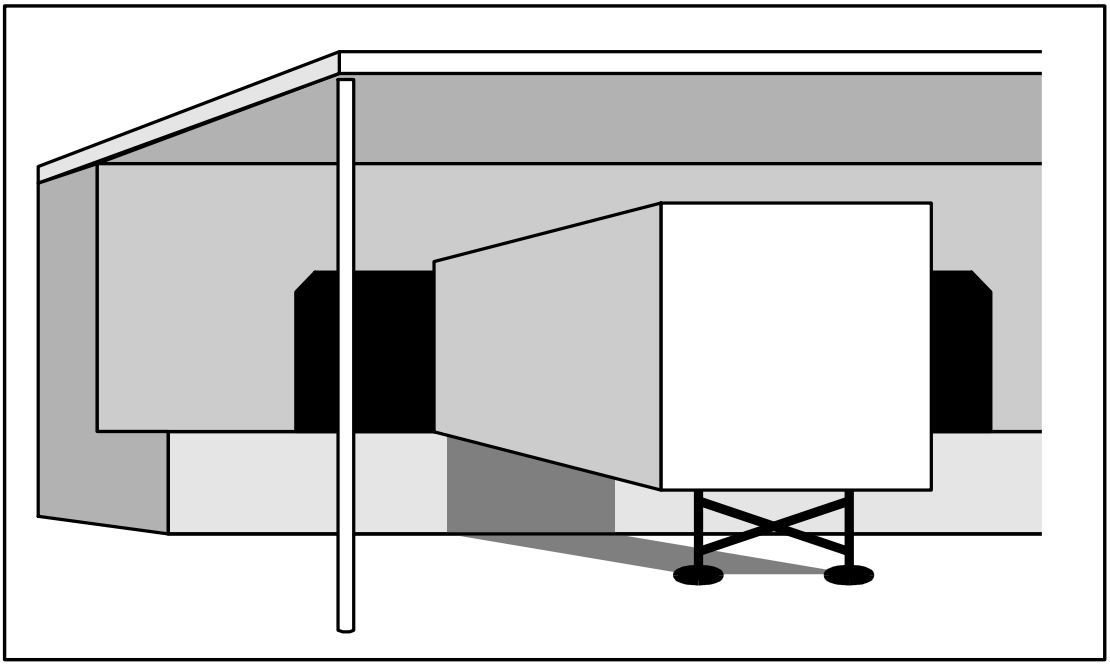

Figure IV-4-5. Loading Dock with Overhang

4.3.2 BMP A202: Fueling at Dedicated Stations

4.3.2.1 Description of Pollutant Sources

A fueling station is a facility dedicated to the transfer of fuels from a stationary pumping station to mobile vehicles or equipment. It includes above or under-ground fuel storage facilities. In addition to general service gas stations, fueling may also occur at 24-hour convenience stores, construction sites, warehouses, car washes, manufacturing establishments, port facilities, and businesses with fleet vehicles. Typically, stormwater contamination at fueling stations is caused by leaks/spills of fuels, lube oils, radiator coolants, and vehicle wash water.

4.3.2.2 Pollutant Control Approach

New or substantially remodeled fueling stations must be constructed on an impervious concrete pad under a roof to keep out rainfall and stormwater run-on. Substantial remodeling includes replacing the canopy or relocating or adding one or more fuel dispensers in such a way that the Portland cement concrete (or equivalent) paving in the fueling area is modified. A treatment BMP must be used for contaminated stormwater and wastewaters in the fueling containment area.

4.3.2.3 Required BMPs:

General Requirements

- Fuel islands shall not drain into the storm drainage system.
- Fuel islands shall be paved and provide a means to protect the storm drainage and sanitary sewers from spills.
- Fuel islands may provide blind sumps for spill containment, or they may drain into the sanitary sewer through a properly sized oil/water separator protected by an emergency shut-off valve. Contact the City of Auburn Sanitary Sewer Utility at 253-931-3010 for assistance.
- Fueling areas must encompass the reach of the longest fueling hose.

Oil/Water Separator Requirements (see Figure IV-4-6)

- Separators shall have as a minimum a 4” diameter tee installed in the discharge line.
- Separators shall have an emergency shut-off valve installed on the discharge line. A valve key shall be provided and be prominently displayed near the shut-off valve.

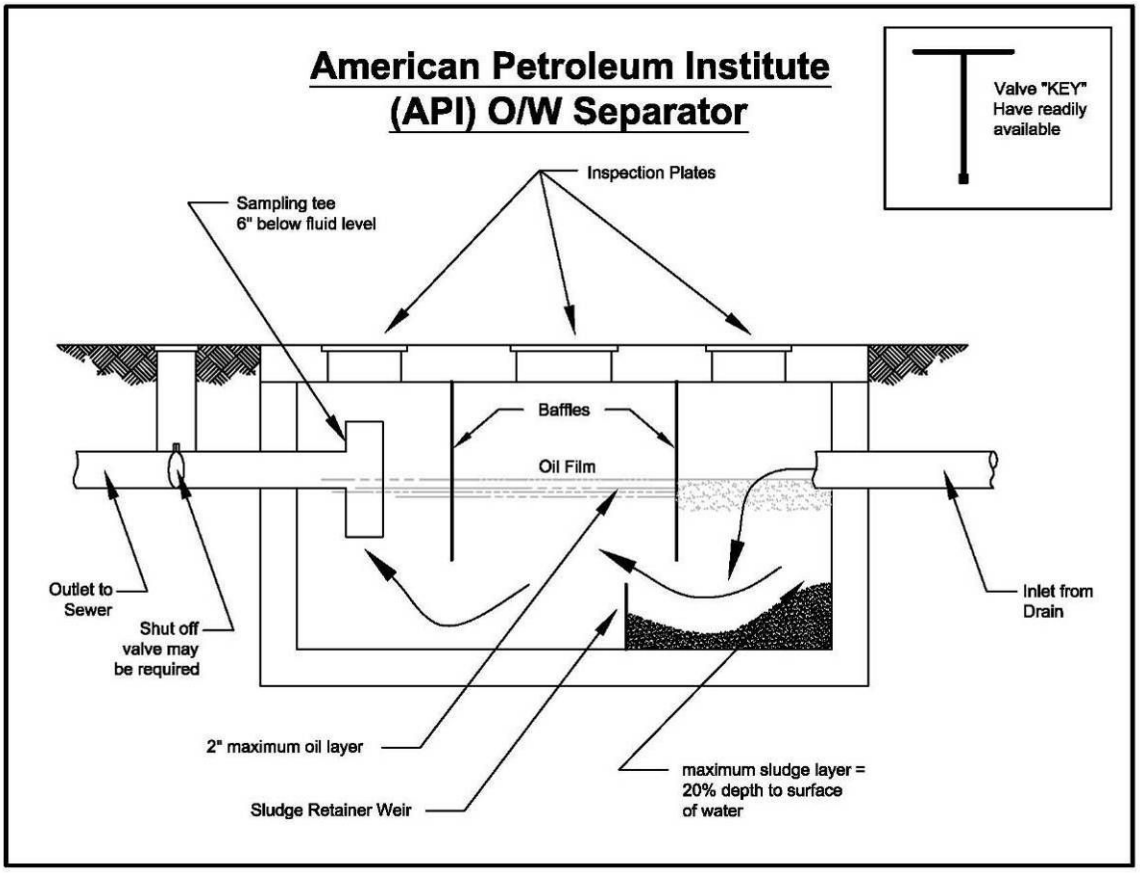

Figure IV-4-6. Oil/Water Separator Layout

Accidental Spill Prevention Plan

An Accidental Spill Prevention Plan developed by the operator and approved by Storm Drainage Utility shall be available for inspection. See BMP A714 Spills of Oil and Hazardous Materials for the elements of a spill plan.

Covered Fuel Islands

- Areas outside the canopy cover shall be sloped or bermed to divert precipitation away from the fuel island and into the storm drainage system.
- For a covered fuel island with incidental stormwater run-on and no more than four (4) hose bibs, a minimum 18 gpm rated, 530 gallon capacity oil/water separator (Hanson Pipe Vault 466-S or equivalent) shall be used when connecting to a sanitary sewer.

- Covered fueling islands must have a roof or canopy to prevent the direct entry of precipitation onto the spill containment pad (see Figure IV-4-7 below). The roof or canopy shall, at a minimum, cover the spill containment pad (within the grade break or fuel dispensing area) and preferably extend several additional feet to reduce the introduction of windblown rain. Convey all roof drains to storm drains outside the fueling containment area.

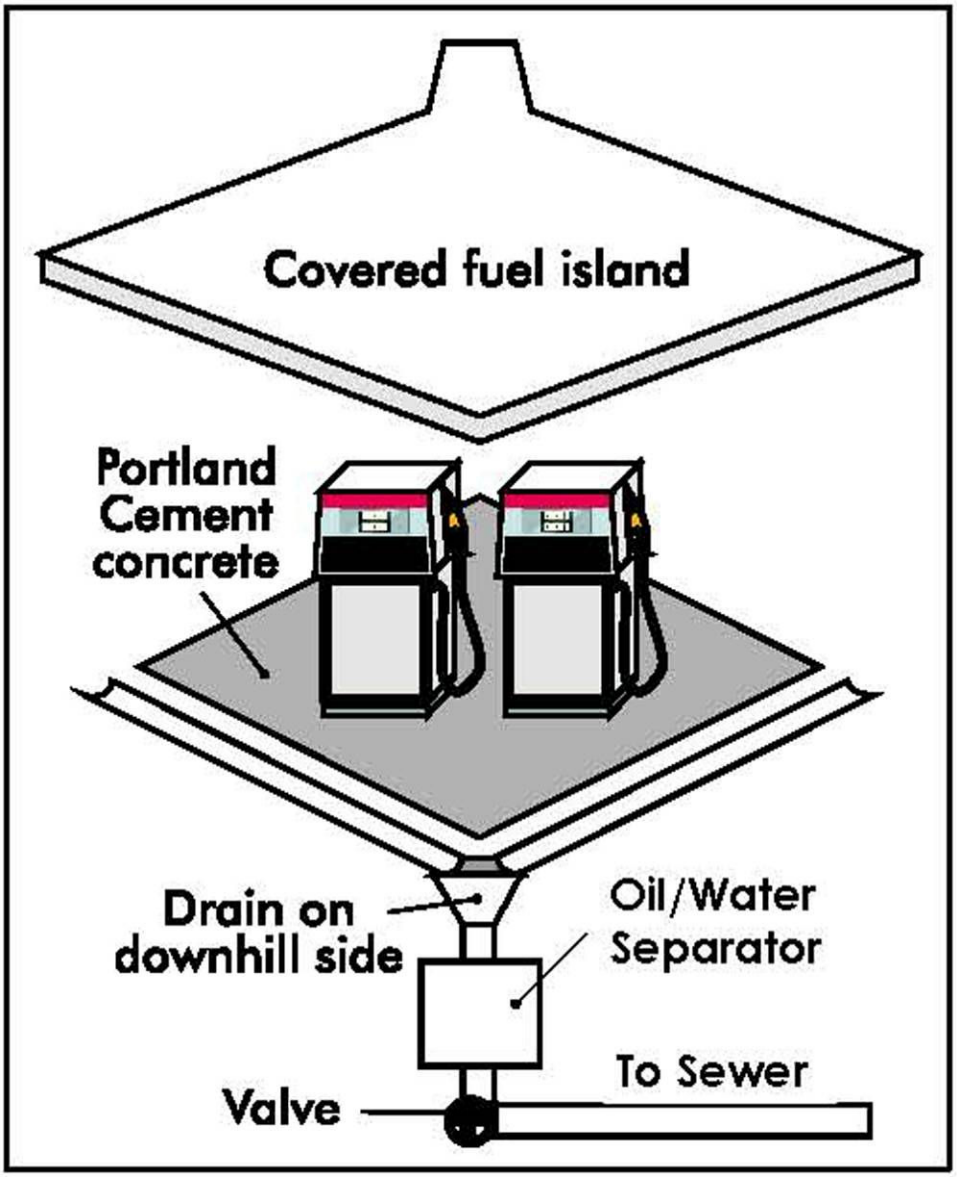

Figure IV-4-7. Covered Fuel Island

Uncovered Fuel Islands

a. Fuel islands shall be sized to minimize the area which drains to the sanitary sewer. Areas outside the pad shall be sloped to divert precipitation into the storm drainage system.

b. Separators used for spill protection with uncovered fuel islands must be sized using standard engineering practices and shall be based on a 25-year storm event (see Table IV-4-1 below).

Table IV-4-1. Uncovered Fuel Island Separator Sizing Requirements

Calculated Flow (gpm)	Separator Size Requirement
18	530 gallon capacity PIPE Vault 466-S, or equivalent
30	900 gallon capacity PIPE Vault 577-S, or equivalent
72	2,160 gallon capacity PIPE Vault 5106-S, or equivalent
108	3,230 gallon capacity PIPE Vault 612-S, or equivalent
126	3,770 gallon capacity PIPE Vault 712-S, or equivalent
182	5,450 gallon capacity PIPE Vault 814-8-S, or equivalent
215	6,460 gallon capacity PIPE Vault 818-8-S, or equivalent

NOTE: This sizing is not appropriate for a stormwater quality treatment device. Refer to Volume V, Chapter 9.

BMPs Applicable to Both Covered and Uncovered Fuel Islands

- Prepare an emergency spill response and cleanup plan (per BMP A714 Spills of Oil and Hazardous Substances) and have designated trained person(s) available either on site or on call at all times to promptly and properly implement that plan and immediately cleanup all spills. Keep suitable cleanup materials, such as dry adsorbent materials, on site to allow prompt cleanup of a spill.
- Train employees on the proper use of fuel dispensers. Post signs in accordance with the International Fire Code (IFC). Post “No Topping Off” signs (topping off gas tanks causes spillage and vents gas fumes to the air). Make sure that the automatic shutoff on the fuel nozzle is functioning properly.
- The person conducting the fuel transfer must be present at the fueling pump during fuel transfer, particularly at unattended or self-serve stations.
- Provide suitable containers for waste materials such as oil filters, oil cans, and garbage.
- Design the fueling island to control spills (a spill control oil/water separator in compliance with City of Auburn requirements) and to treat collected stormwater and/or wastewater to required levels. Slope the concrete containment pad around the fueling island toward drains: trench drains or, catch basins. The slope of the drains shall not be less than 1 percent (Section 3405.3.8.1 of the IFC). The outlet from the spill control oil/water separator shall have a shutoff valve, which must be

closed in the event of a spill. The spill control sump must be sized using standard engineering practices and shall be based a 25-year storm event when the fueling area is uncovered; or

- Design the fueling island as a spill containment pad with a sill or berm raised to a minimum of four inches to prevent the runoff of spilled liquids and to prevent run-on of stormwater from the surrounding area. Raised sills are not required at the open-grate trenches that connect to an approved drainage-control system.
- The fueling pad must be paved with Portland cement concrete, or equivalent. Asphalt is not considered an equivalent material.
- Stormwater collected on the fuel island containment pad must be conveyed to a sanitary sewer system, as approved by the City of Auburn. In rare cases, stormwater may be conveyed to the storm drainage system through an approved treatment system such as an oil/water separator and a basic treatment BMP (basic treatment BMPs are listed in Volume V and include media filters and biofilters). Discharges from treatment systems to storm drains or surface water or to the ground must not display ongoing or recurring visible sheen and must not contain levels of oil and grease above Water Quality or Model Toxics Control Act criteria.
- Alternatively, stormwater collected on the fuel island containment pad may be collected and held for proper off site disposal.
- Conveyance of any fuel-contaminated stormwater to a sanitary sewer must be approved by the City of Auburn. All discharge must meet the criteria specified in Auburn City Code Chapter 13.20.
- Transfer fuel from the delivery tank truck to the fuel storage tank on an impervious surface and ensure that appropriate overflow protection is used. Use drip pans under all hose connections.

Additional BMP for Vehicles 10 feet in height or greater:

A roof or canopy may not be practicable at fueling stations that regularly fuel vehicles that are 10 feet in height or greater, particularly at industrial sites. At those types of fueling facilities, the following BMPs apply, as well as all of the other required BMPs and fire code requirements.

- The concrete fueling pad must be equipped with emergency spill control, which may include an oil/water separator, with a shutoff valve for the drainage from the fueling area. The valve must be closed in the event of a spill. Spills must be cleaned up and disposed off-site in accordance with BMP A714 Spills of Oil and Hazardous Substances.
- Stormwater collected on the fuel island containment pad must be conveyed to a sanitary sewer system, as approved by the City of Auburn. In rare cases, and only when approved by the City, stormwater may be conveyed to the storm drainage system through an approved treatment system such as an oil/water separator and a basic treatment BMP (basic treatment BMPs are listed in Volume V and include

media filters and biofilters). Discharges from treatment systems to storm drains or surface water or to the ground must not display ongoing or recurring visible sheen and must not contain levels of oil and grease above Water Quality or Model Toxics Control Act criteria.

An explosive or flammable mixture is defined under state and federal pretreatment regulations, based on a flash point determination of the mixture. If contaminated stormwater is determined not to be explosive or flammable, then it could be conveyed to a sanitary sewer system, if approved by the City of Auburn.

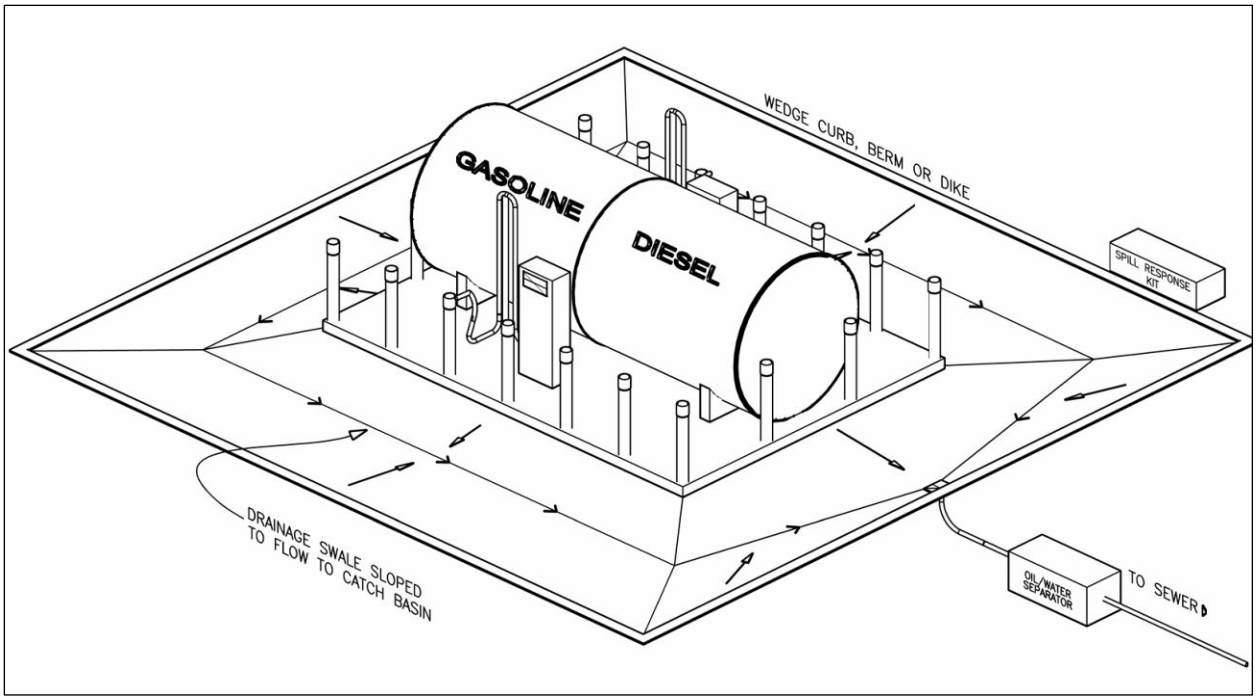

Figure IV-4-8. Surrounding Activities Containing Oversized Equipment

4.3.3 BMP A203: Vehicle Maintenance Activities

4.3.3.1 Description of Pollutant Sources

This activity applies to businesses and public agencies where fuel filters, engine oil, and other fluids such as battery acid, coolants, and transmission and brake fluids are removed and replaced in vehicles and equipment. It also applies to mobile vehicle maintenance operations, such as at construction sites. Related vehicle maintenance activities are covered under the following activity headings in this manual, and other BMPs provided in this manual:

A103 Washing, Pressure Washing, and Steam Cleaning of Vehicles/Equipment/Building Structures
A201 Loading and Unloading Areas for Liquid or Solid Material
A202 Fueling at Dedicated Stations
A204 Mobile Fueling
A307 Painting, Finishing and Coating of Vehicles, Boats, Buildings, and Equipment
A401 Storage or Transfer (Outside) of Solid Raw Materials, By-Products, or Finished Products
A407 Storage of Liquid, Food Waste, or Dangerous Waste Containers
A408 Storage of Liquids in Permanent Above-ground Tanks
A409 Parking and Storage for Vehicles and Equipment
A714 Spills of Oil and Hazardous Substances

Pollutants of concern include toxic hydrocarbons, toxic organic compounds, oils and greases, pH, and heavy metals.

4.3.3.2 Pollutant Control Approach

Control of leaks and spills of fluids using good housekeeping and cover and containment BMPs.

4.3.3.3 Required BMPs

The following BMPs or equivalent measures are required of all businesses and agencies engaged in engine and vehicle repair:

- Employees must be educated about the need for careful handling of automotive fluids. Employees at businesses or agencies who routinely change or handle these fluids must be trained in spill response and cleanup procedures. Inspect all incoming vehicles, parts, and equipment stored temporarily outside for leaks.
- Remove batteries and liquids from vehicles and equipment in designated areas designed to prevent stormwater contamination. Store cracked batteries in a covered non-leaking secondary containment system.
- Empty fuel and fuel filters before disposal.
- Spill cleanup materials, such as rags and absorbent materials, must always be kept close at hand when changing oil and other fluids. Soiled rags and other cleanup material must be properly disposed of or cleaned and reused.

- Floor drains inside buildings shall connect to sanitary sewer, be routed through an appropriately sized oil/water separator and shall be approved by the City.
- Do not hose down the maintenance/repair area. Instead, sweep the area weekly to collect dirt, and wipe up spills with rags and other absorbent materials.
- A bermed tarp, ground cloth, or drip pans must be used beneath the vehicle or equipment to capture all spills and drips. The collected drips and spills must be recycled or disposed of properly. See BMP S102 for disposal options.
- If this activity occurs at a stationary business location, the activity area must be moved indoors. An exception to this requirement would be equipment that is too large to fit under a roofed area. In this case, the outdoor area must be paved, provided with a sump drain, and provision made for stormwater run-on prevention. See BMP S106 and S107 for more on paving, sump drains and holding tanks, and run-on prevention. Contact the City of Auburn Sanitary Sewer Utility at 253-931-3010 for information on requirements for disposal to sewer. If the site utilizes a septic tank, sump contents will need to be pumped and disposed of by an oil recycler or hazardous waste company.
- Recycle oil, antifreeze, batteries, and air conditioning coolant.
- If engine washing is to be performed, then appropriate pretreatment will be required. Contact the City of Auburn Sanitary Sewer Utility at 253-931-3010 for the requirements.
- Implement the following treatment BMP in addition to the Required BMPs:
- Contaminated stormwater runoff from vehicle staging and maintenance areas must be conveyed to an API or CP oil and water separator followed by a basic treatment BMP (see Volume V), applicable filter, or other equivalent oil treatment system.

4.3.3.4 Recommended BMPs

The following BMPs are not required, but can provide additional pollution prevention.

- Drain all fluids from wrecked vehicles and car parts upon arrival. Recover air conditioning gases.
- Use reusable cloth rags to clean up drips and small spills instead of disposables: these can be professionally laundered and reused. Do not attempt to launder these at home or at a coin-op laundry.
- Use absorbent pillows or booms in or around storm drains and catch basins to absorb oil and fuel.

4.3.4 BMP A204: Mobile Fueling of Vehicles and Heavy Equipment

4.3.4.1 Description of Pollutant Sources

Mobile fueling, also known as fleet fueling, wet fueling, or wet hosing, is the practice of filling fuel tanks of vehicles by tank trucks that are driven to the yards or sites where the vehicles to be fueled are located. Mobile fueling is only conducted using diesel fuel, as mobile fueling of gasoline is prohibited. Diesel fuel is considered a Class II Combustible Liquid, whereas gasoline is considered a Flammable Liquid.

Historically mobile fueling has been conducted for off-road vehicles that are operated for extended periods of time in remote areas. This includes construction sites, logging operations, and farms. Mobile fueling of on-road vehicles is also conducted commercially in the State of Washington.

4.3.4.2 Pollutant Control Approach

Proper training of the fueling operator, and the use of spill/drip control and reliable fuel transfer equipment with backup shutoff valving are typically needed.

4.3.4.3 Required BMPs

Organizations and individuals conducting mobile fueling operations must implement the following BMPs. The operating procedures for the driver/operator shall be simple, clear, effective and their implementation verified by the organization that will potentially be liable for environmental and third party damage.

- Ensure that all mobile fueling operations are approved and permitted by the Valley Regional Fire Authority and comply with local and Washington State fire codes. Contact the Valley Regional Fire Authority at 253-931-3060.
- In fueling locations that are in close proximity to sensitive aquifers, designated wetlands, wetland buffers, or other waters of the State, approval by the City of Auburn is necessary to ensure compliance with additional local requirements. It shall be the responsibility of the site owner to obtain approval under this exception. Any permit holder permitted under this exception shall cover all catch basins prior to commencing any fueling operations. Sites which are adjacent to designated wetlands, wetland buffers, streams, or bodies of water shall have on site, in a marked conspicuous location a minimum of 50 feet of 4-inch diameter, non-water absorbing containment boom.
- Ensure compliance with all 49 CFR 178 requirements for DOT 406 cargo tanker. Documentation from a Department of Transportation (DOT) Registered Inspector shall be proof of compliance.
- Ensure the presence and the constant observation/monitoring by the driver/operator at the fuel transfer location at all times during fuel transfer and ensure that the following procedures are implemented at the fuel transfer locations:
    - Locate the point of fueling at least 25 feet from the nearest storm drain or inside an impervious containment area with a volumetric holding capacity equal to or greater than 110 percent of the receiving tank volume, or place an

impervious covering over the storm drain to ensure no inflow of spilled or leaked fuel. Storm drains that convey the inflow to a spill control separator approved by the City of Auburn and the Valley Regional Fire Authority need not be covered. Potential spill/leak conveyance surfaces must be impervious and in good repair.

  - Place a drip pan or an absorbent pad under each fueling location prior to and during all dispensing operations. The pan (must be liquid tight) and the absorbent pad must have a capacity of 3 gallons. Spills retained in the drip pan or the pad need not be reported.
  - Handle and operate fuel transfer hoses and nozzle, drip pan(s), and absorbent pads to prevent spills/leaks of fuel from reaching the ground, storm drains, and receiving waters.
  - Do not extend the fueling hoses across a traffic lane without fluorescent traffic cones, or equivalent devices.
  - Remove the fill nozzle and cease filling when the automatic shut-off valve engages. Do not allow automatic shutoff fueling nozzles to be locked in the open position.
  - Do not “top off” the equipment receiving fuel.
- Provide the driver/operator of the fueling vehicle with:
  - Adequate headlamps, flashlights or other mobile lighting to view fill openings with poor accessibility. Consult with the Valley Regional Fire Authority for additional lighting requirements.
  - Two-way communication with home base.
- Train the driver/operator annually in spill prevention, reporting and cleanup measures and emergency procedures. Make all employees aware of the significant liability associated with fuel spills.
- The fueling operation procedures shall be properly signed and dated by the responsible manager, distributed to the operators, retained in the organization files, and made available in the event an authorized government agency requests a review.
- Ensure that the Valley Regional Fire Authority (911) and the Ecology Northwest Regional Office (425) 649-7000 are immediately notified in the event of any spill entering surface or groundwaters, including catch basins. Establish a 24-hour “call down list” to ensure the rapid and proper notification of management and government officials should any amount of product be spilled on-site. Keep the list in a protected but readily accessible location in the mobile fueling truck. The “call down list” shall also pre-identify spill response contractors available in the area to ensure the rapid removal of significant product spillage into the environment.

- Maintain a minimum of the following spill clean-up materials in all fueling vehicles, that are readily available for use:
  - Non-water absorbents (pads, pillows, sump skimmers) capable of absorbing 15 gallons of diesel fuel;
  - A storm drain plug or cover kit;
  - A non-water absorbent containment boom of a minimum 10 feet in length with a 12-gallon absorbent capacity;
  - A non-metallic shovel; and
  - Two, five-gallon buckets with lids.
  - Loose granular absorbent material capable of absorbing a minimum of 5 gallons of diesel. Use only non-water absorbing materials, such as peat moss, during wet weather conditions.
- Use automatic shutoff nozzles for dispensing the fuel. Replace automatic shut-off nozzles as recommended by the manufacturer.
- Maintain and replace equipment on fueling vehicles, particularly hoses and nozzles, at established intervals to prevent failures.
- Do not overfill tanks. Allow room for heat expansion of fuel during warm weather.
- Include the following fuel transfer site components:
  - Automatic fuel transfer shut-off nozzles; and
  - An adequate lighting system at the filling point.

4.4 Production and Application Activities

4.4.1 BMP A301: Concrete and Asphalt Mixing and Production at Stationary Sites

4.4.1.1 Description of Pollutant Sources

This activity applies to businesses and agencies that mix raw materials onsite to produce concrete or asphalt. It also applies to subsequent uses such as pouring concrete structures and making other concrete or asphalt products. Mobile concrete pouring and asphalt application are covered under BMP A302. Requirements for stockpiling of raw materials are covered under BMP A401 Storage or Transfer (Outside) of Solid Raw Materials, By-products or Finished Products.

Pollutants of concern include toxic hydrocarbons, toxic organic compounds, oils and greases, heavy metals, and pH.

4.4.1.2 Pollutant Control Approach

Cover and contain processes where possible and prevent stormwater run-on and contamination, where feasible.

Any facility categorized under SIC Code 2951 or SIC Code 3273 may need to comply with Ecology's Sand and Gravel General Permit. Contact Ecology at 360-407-6400 for additional information. These facilities may also be subject to City of Auburn requirements. Contact the City of Auburn Public Works Department at 253-931-3010 for further information.

4.4.1.3 Required BMPs

The following BMPs or equivalent measures are required of all businesses and public agencies active in concrete and asphalt mixing and production:

- Eliminate all illicit connections to the storm drainage system. See BMP S101 for a detailed discussion on identifying and eliminating these connections.
- All process water from production, pouring, and equipment cleaning must be discharged to a dead-end sump, a process water treatment system, connected to the sanitary sewer, or recycled. Never wash fresh concrete or concrete mixer washout into streets, storm drainage systems, streams, or other water bodies.
- A BMP maintenance schedule must be established, maintenance documented, and employees educated about the need to prevent stormwater contamination through the use and proper maintenance of BMPs.
- Production and pouring areas must be protected from stormwater run-on. See BMP S107 for methods of run-on protection.
- Cover the production area for prevention of stormwater run-on. See BMP S104 and S107 for information on covers and run-on prevention.
- Use absorbent materials or catch basin filters in and around storm drains and catch basins to filter out contaminants.

4.4.1.4 Recommended BMPs

The following BMPs are not required, but can provide additional pollution protection:

- The production and pouring area should be swept at the end of each work day to collect loose chunks of aggregate and raw materials for recycling or proper disposal. See BMP S102 for disposal options.
- Sweep all driveways and gutters that show accumulation of materials to minimize the amount that could be carried offsite by rain and enter the storm drainage system. Use of vacuum sweepers is most efficient.
- Asphalt plants should use an oil/water separator to treat stormwater runoff. See Volume V, Water Quality Treatment BMPs, for more information.
- Pave the mixing, production, and pouring areas. A sump drain in these areas is probably not advisable due to potential clogging problems, but could be used in a curing area. Sweep these areas to remove loose aggregate and recycle or dispose of properly.
- Use storm drain covers or similarly effective containment devices to prevent runoff from entering the storm drainage system. Accumulations of dirty runoff must be disposed of properly.

Contact the City of Auburn Storm Drainage Utility at 253-931-3010 for information about water quality treatment BMPs for these types of operations. Contact the Department of Ecology's web page for accepted water quality treatment at http://www.ecy.wa.gov/programs/wq/stormwater/index.html.

The use of any treatment BMP must not result in the violation of groundwater, surface water, or wastewater standards.

4.4.2 BMP A302: Concrete Pouring, Concrete Cutting, and Asphalt Application at Temporary Sites

4.4.2.1 Description of Pollutant Sources

This activity applies to businesses and public agencies that apply asphalt or pour or cut concrete for building construction and remodeling, road construction, utility projects, sidewalk, curb and gutter repairs and construction, sealing of driveways and roofs, and other applications. These activities are typically done on a temporary site-to-site basis where permanent BMP measures do not apply. Concrete pouring activities can not only severely alter the pH of receiving waters, but slurry from aggregate washing can harden in storm pipes, thus reducing capacity and creating flooding problems.

Pollutants of concern include toxic hydrocarbons, toxic organic compounds, oils and greases, heavy metals, suspended solids, and pH.

4.4.2.2 Pollutant Control Approach

Train employees on proper procedures, sweep or shovel aggregate chunks, collect accumulated runoff and solids, and wash equipment in designated areas.

4.4.2.3 Required BMPs

The following BMPs or equivalent measures are required of all businesses and agencies doing concrete pouring and asphalt application at temporary sites:

- Employees must be educated on the pollution hazards of concrete and asphalt application and cutting.
- Loose aggregate chunks and dust must be swept or shoveled and collected (not hosed down a storm drain) for recycling or proper disposal at the end of each work day, especially at work sites such as streets, driveways, parking lots, sidewalks, curbs, and gutters where rain can readily pick up the loose material and carry it to the nearest stormwater conveyance. Small amounts of excess concrete, grout, and mortar can be disposed of in the trash.
- Storm drain covers or similarly effective containment devices must be placed over all nearby drains at the beginning of each day. Shovel or vacuum slurry and remove from the site. All accumulated runoff and solids must be collected and properly disposed (see BMP S102 for disposal options) at the end of each work day, or more often if necessary.
- Exposed aggregate washing, where the top layer of unhardened concrete is hosed or scraped off to leave a rough finish, must be done with a mechanism for containment and collection of the discarded concrete slurry (such as the storm drain covers mentioned above). The easiest way to contain the washwater is to direct the washings to a trench in the ground where the water can percolate into the ground and the solids later covered with soil.

- Cleaning of concrete application and mixing equipment or concrete vehicles on the work site must be done in a designated area where the rinse water is controlled. The rinse water must either be collected for proper disposal or put into a trench in the ground where the water can percolate away and the solids later covered with soil or recovered and disposed or recycled.

The use of any treatment BMP must not result in the violation of groundwater, surface water, or drinking water quality standards.

4.4.2.4 Recommended BMPs

The following BMPs are not required but can provide additional pollution prevention:

- Avoid the activity when rain is occurring or expected.
- If possible, portable asphalt mixing equipment should be covered by an awning, a lean-to, or another simple structure to avoid contact with rain. See BMP S104 for further details on cover structures.
- Recycle broken concrete and asphalt. Look under Recycling Services in the Yellow pages of the phone book to find the nearest recycler.

4.4.3 BMP A303: Manufacturing and Post-Processing of Metal Products

4.4.3.1 Description of Pollutant Sources

This activity applies to businesses such as mills, foundries, and fabricators that manufacture or post-process metal products. A variety of activities such as machining, grinding, soldering, cutting, welding, quenching, cooling, and rinsing may take place. These businesses may be required to obtain a National Pollutant Discharge Elimination System (NPDES) permit from the Department of Ecology or an Industrial Wastewater Discharge Permit from King County-Metro. See Chapter 5 for a discussion of NPDES requirements and contact the City of Auburn Sanitary Sewer Utility at 253-931-3010 to determine if a wastewater discharge permit is necessary.

NOTE: Painting, finishing and coating of metal products is covered under BMP A307 Painting, Finishing, and Coating of Vehicles, Boats, Buildings, and Equipment.

Pollutants of concern include toxic organic compounds, heavy metals, oils and greases, pH, suspended solids, and biological oxygen demand (BOD).

4.4.3.2 Pollutant Control Approach

Cover and contain operations and apply good housekeeping and preventive maintenance practices to prevent the contamination of stormwater.

4.4.3.3 Required BMPs

The following BMPs or equivalent measures are required of all businesses engaged in metals manufacturing or post-processing:

- Eliminate illicit connections to the storm drainage system. See BMP S101 for detailed information on identifying and eliminating illicit connections.
- Process wastewater (including contact cooling water, filter backwash, cooling tower blowdown, etc.) from this activity, and stormwater runoff from activity areas, must discharge to a sanitary sewer, holding tank, or process treatment system that would need an Ecology NPDES Permit for discharge to surface water or storm drain. Contact the City of Auburn Permit Center at 253-931-3090 to obtain permits for discharge to the sewer. See BMP S103 for detailed requirements.
- Employees must be educated to control their work with metal products to minimize pollution.
- The activity area must be swept at the end of each work day to collect and dispose of metal fragments and product residues properly. See BMP S102 for disposal alternatives.

4.4.3.4 Recommended BMPs

The following BMPs are not required but can provide additional pollution protection:

- Limit the amount of water used in quenching and rinsing. Recycle used water where possible.
- Cover the activity area to prevent rain from contacting the process and reduce the amount of runoff that has to be detained or treated.
- Use a catch basin filter or screen basket insert to capture stray metal particles.
- Implement a program to track purchase and consumption of lubricants, solvents, and additives. Check with operating managers for an explanation if consumption increases. Recommend actions if significant equipment leaks or spills are identified.
- Utilize any additional BMPs which are applicable for materials storage and maintenance activities in your shop.

4.4.4 BMP A304: Wood Treatment Areas

4.4.4.1 Description of Pollutant Sources

Wood treatment includes both anti-staining and wood preserving using pressure processes or by dipping or spraying. Wood preservatives include creosote, creosote/coal tar, pentachlorophenol, copper naphthenate, arsenic trioxide, malathion, or inorganic arsenicals such as chromated copper arsenate, acid copper chromate, chromate zinc chloride, and fluor-chrome-arsenate-phenol. Anti-staining chemical additives include iodo-prophenyl-butyl carbamate, dimethyl sulfoxide, didecyl dimethyl ammonium chloride, sodium azide, 8-quinolinol, copper (II) chelate, sodium ortho-phenylphenate, 2-(thiocyanomethylthio)-benzothiazole (TCMTB) and methylene bis- (thiocyanate), and zinc naphthenate.

Pollutant sources include drips of condensate or preservative after pressurized treatment, product washwater (in the treatment or storage areas), spills and leaks from process equipment and preservative tanks, fugitive emissions from vapors in the process, blowouts and emergency pressure releases, and kick-back from lumber (phenomenon where preservative leaks as it returns to normal pressure). Potential pollutants typically include the wood treating chemicals, BOD, suspended solids, oil and grease, benzene, toluene, ethylbenzene, phenol, chlorophenols, nitrophenols, heavy metals, and PAH, depending on the chemical additive used.

4.4.4.2 Pollutant Control Approach

Cover and contain all wood treating areas and prevent all leaching of and stormwater contamination by wood treating chemicals. All wood treating facilities in Washington State are required to be covered under an individual NPDES Permit and may require an Industrial Wastewater Discharge Permit from King County-Metro.

4.4.4.3 Required BMPs

The individual NPDES Permit will require the following BMPs at a minimum:

- Dedicate equipment that is used for treatment activities to prevent the tracking of treatment chemicals to other areas on the site.
- Eliminate non-process traffic on the drip pad. Scrub down non-dedicated lift trucks on the drip pad.
- Immediately remove and properly dispose of soils with visible surface contamination (green soil) to prevent the spread of chemicals to groundwater and/or surface water via stormwater runoff.
- If any wood is observed to be contributing chemicals to the environment in the treated wood storage area, relocate it on a concrete chemical containment structure until the surface is clean and until it is drip free and surface dry.
- Cover and/or enclose, and contain with impervious surfaces, all wood treatment areas. Slope and drain areas around dip tanks, spray booths, retorts, and any other process equipment in a manner that allows return of treatment chemicals to the wood treatment process.

- Cover storage areas for freshly treated wood to prevent contact of treated wood products with stormwater. Segregate clean stormwater from process water. Ensure that all process water is conveyed to an approved treatment system.
- Seal any holes or cracks in the asphalt areas that are subject to wood treatment chemical contamination.
- Elevate stored, treated wood products to prevent contact with stormwater run-on and runoff.
- Place dipped lumber over the dip tank or on an inclined ramp for a minimum of 30 minutes to allow excess chemical to drip back to the dip tank.
- Place treated lumber either from dip tanks or retorts in a covered paved storage area for at least 24 hours before placement in outside storage. Use a longer storage period during cold weather unless the temporary storage building is heated. The wood shall be drip free and surface dry before it is moved outside.

4.4.4.4 Recommended BMP

Consider using preservative chemicals that do not adversely impact receiving surface water and groundwater.

4.4.5 BMP A305: Commercial Composting

4.4.5.1 Description of Pollutant Sources

Commercial compost facilities operating outside without cover require large areas to decompose wastes and other feedstocks. These facilities should be designed to separate stormwater from leachate (i.e., industrial wastewater) to the greatest extent possible. When stormwater is allowed to contact any active composting areas, including waste receiving and processing areas, it becomes leachate. Pollutants in leachate include nutrients, biochemical oxygen demand (BOD), organics, coliform bacteria, acidic pH, color, and suspended solids. Stormwater at a compost facility consists of runoff from areas at the facility that are not associated with active processing and curing, such as product storage areas, vehicle maintenance areas, and access roads.

4.4.5.2 NPDES Permit Requirements

Discharge of leachate from a compost facility will require a State or NPDES permit from Ecology, depending on the disposal method chosen for managing leachate at the facility (see the Ecology website www.ecy.wa.gov/programs/swfa/compost). An additional alternative, zero discharge, is possible by containing all leachate from the facility (in tanks or ponds) or preventing production of leachate (by composting under a roof or in an enclosed building).

4.4.5.3 Pollutant Control Approach

Consider the leachate control specified on the Ecology website: www.ecy.wa.gov/programs/swfa/compost or zero discharge of leachate.

4.4.5.4 Required BMPs

- Ensure that the compost feedstocks do not contain dangerous wastes regulated under Chapter 173-303 WAC or hazardous products of a similar nature or solid wastes that are not beneficial to the composting process. Employees must be trained to screen these materials in incoming wastes.
- Contact other federal, state, and City of Auburn departments with environmental or zoning authority for applicable permit and regulatory information. County Health Departments are responsible for issuing solid waste handling permits for commercial compost facilities.
- Apply for coverage under the General Permit to Discharge Stormwater Associated with Industrial Activities if the facility discharges stormwater to surface water or a municipal stormwater system. If all stormwater from the facility infiltrates into the surrounding area, the General Permit is not required.
- Develop a plan of operations as outlined in the Composting Facility Standards (WAC 173-350-220).
- Store finished compost in a manner to prevent contamination of stormwater.
- Compost pads are required for all uncovered facilities in areas of the state with wet climates (per water quality regulations).
- Provide curbing for all compost pads to prevent stormwater run-on and leachate run-off.

- Slope all compost pads sufficiently to direct leachate to the collection device.
- Provide one or more sumps or catch basins capable of collecting all leachate generated by the design storm and conveying it to the leachate holding structure for all compost pads.
- Convey all leachate from composting operations to a sanitary sewer, holding tank, or on-site treatment system designed to treat the leachate. Discharge of leachate to the sanitary sewer may require an Industrial Wastewater Discharge Permit. Contact the City of Auburn Sanitary Sewer Utility at 253-931-3010 for a determination.
- Ponds used to collect, store, or treat leachate and other contaminated waters associated with the composting process must be lined to prevent groundwater contamination. Apply "AKART" or All Known Available and Reasonable Methods of Prevention and Treatment to all pond liners, regardless of the construction materials.

Refer to "Compost Facility Resource Handbook, Guidance for Washington State," November 1998, Publication # 97-502, for additional design criteria and information.

4.4.5.5 Recommended BMPs

- Clean up debris from yard areas regularly.
- Locate stored residues in areas designed to collect leachate.
- Limit storage times of residues to prevent degradation and generation of leachate.
- Consider using leachate as make-up water in early stages of the composting process. Since leachate can contain pathogenic bacteria, care should be taken to avoid contaminating finished product or nearly finished product with leachate.

4.4.6 BMP A306: Landscaping and Lawn/Vegetation Management

4.4.6.1 Description of Pollutant Sources

Landscaping can include grading, soil transfer, vegetation removal, pesticide and fertilizer application, and watering. Stormwater contaminants include toxic organic compounds, heavy metals, oils, total suspended solids, coliform bacteria, fertilizers, and pesticides.

Lawn and vegetation management can include control of objectionable weeds, insects, mold, bacteria, and other pests with chemical pesticides and is conducted commercially at commercial, industrial, and residential sites. Examples include weed control on golf course lawns, access roads, and utility corridors and during landscaping; sap stain and insect control on lumber and logs; rooftop moss removal; killing nuisance rodents; fungicide application to patio decks; and residential lawn/plant care. Toxic pesticides such as pentachlorophenol, carbamates, and organometallics can be released to the environment by leaching and dripping from treated parts, container leaks, product misuse, and outside storage of pesticide contaminated materials and equipment. Poor management of the vegetation, poor application of pesticides or fertilizers, and non-targeted irrigation water or over watering can cause appreciable stormwater contamination.

4.4.6.2 Pollutant Control Approach

Control of fertilizer and pesticide applications, soil erosion, and site debris to prevent contamination of stormwater.

Develop and implement an Integrated Pest Management Plan (IPM) and use pesticides only as a last resort. Refer to Volume IV, Appendix C – *Example of an Integrated Pest Management Program* for more information. If pesticides/herbicides are used they must be carefully applied in accordance with label instructions on U.S. Environmental Protection Agency (EPA) registered materials. Maintain appropriate vegetation, with proper fertilizer application where practicable, to control erosion and the discharge of stormwater pollutants. Where practicable, grow plant species appropriate for the site, or adjust the soil properties of the subject site to grow desired plant species.

4.4.6.3 Required BMPs for Landscaping

- Install engineered soil/landscape systems to improve the infiltration and regulation of stormwater in landscaped areas.
- Do not dispose of collected vegetation into wetlands, waterways or storm drainage systems.

4.4.6.4 Recommended BMPs for Landscaping

- Conduct mulch-mowing whenever practicable.
- Dispose of grass clippings, leaves, sticks, or other collected vegetation by composting, if feasible.
- Collect all clippings, leaves, bark, and trimmings blown onto the sidewalk or street. Do not leave this material in the gutter or where it can be washed into the storm drainage system.

- Use mulch or other erosion control measures when soils are exposed for more than one week during the dry season or two days during the rainy season.
- If oil or other chemicals are handled, store and maintain appropriate oil and chemical spill cleanup materials in readily accessible locations. Ensure that employees are familiar with proper spill cleanup procedures.
- Till fertilizers into the soil rather than dumping or broadcasting onto the surface. Determine the proper fertilizer application for the types of soil and vegetation encountered.
- Till a topsoil mix or composted organic material into the soil to create a well-mixed transition layer that encourages deeper root systems and drought-resistant plants.
- Use manual and/or mechanical methods of vegetation removal rather than applying herbicides, where practical.
- Target irrigation water on vegetated areas and limit irrigation time to reduce the potential of carrying fertilizers and pesticides off-site.

4.4.6.5 Required BMPs for the Use of Pesticides

- Develop and implement an integrated pest management system (IPM) (See section on IPM at end of BMP) and use pesticides only as a last resort.
- Implement a pesticide-use plan and include at a minimum: a list of selected pesticides and their specific uses; brands, formulations, application methods, and quantities to be used; equipment use and maintenance procedures; safety, storage, and disposal methods; and monitoring, record keeping, and public notice procedures. All procedures shall conform to the requirements of Chapter 17.21 RCW and Chapter 16-228 WAC (Appendix 4 – D.R.7).
- Choose the least toxic pesticide available that is capable of reducing the infestation to acceptable levels. The pesticide should readily degrade in the environment and/or have properties that strongly bind it to the soil. Any pest control used should be conducted at the life stage when the pest is most vulnerable. Any method used should be site-specific and not used wholesale over a wide area.
- Apply the pesticide according to label directions. Under no conditions shall pesticides be applied in quantities that exceed manufacturer's instructions.
- Mix the pesticides and clean the application equipment in an area where accidental spills will not enter surface or groundwaters, and will not contaminate the soil.
- Store pesticides in enclosed areas or in covered impervious containment. Ensure that pesticide contaminated stormwater or spills/leaks of pesticides are not discharged to storm drains. Do not hose down paved areas to a storm drain or conveyance ditch. Store and maintain appropriate spill cleanup materials in a location known to all near the storage area.
- Clean up any spilled pesticides and ensure that the pesticide contaminated waste materials are kept in designated covered and contained areas.

- The pesticide application equipment must be capable of immediate shutoff in the event of an emergency.
- Do not spray pesticides within 100 feet of open waters including wetlands; ponds; and streams, sloughs, and any drainage ditch or channel that leads to open water, except when approved by Ecology or by the City of Auburn. All sensitive areas including wells, creeks, and wetlands must be flagged prior to spraying.
- As required by the City of Auburn or by Ecology, complete public posting of the area to be sprayed prior to the application.
- Spray applications should only be conducted during weather conditions as specified in the label direction and applicable local and state regulations. Do not apply during rain or immediately before expected rain.

4.4.6.6 Recommended BMPs for the use of Pesticides

- Consider alternatives to the use of pesticides such as covering or harvesting weeds, substitute vegetative growth, and manual weed control/moss removal.
- Consider the use of soil amendments, such as compost, that are known to control some common diseases in plants, such as Pythium root rot, ashy stem blight, and parasitic nematodes. The following are three possible mechanisms for disease control by compost addition (USEPA Publication 530-F-9-044):
  - Successful competition for nutrients by antibiotic production;
  - Successful predation against pathogens by beneficial microorganism; and
  - Activation of disease-resistant genes in plants by composts.

  Installing an amended soil/landscape system can preserve both the plant system and the soil system more effectively. This type of approach provides a soil/landscape system with adequate depth, permeability, and organic matter to sustain itself and continue working as an effective stormwater infiltration system and a sustainable nutrient cycle.

- Once a pesticide is applied, its effectiveness should be evaluated for possible improvement. Records should be kept showing the applicability and inapplicability of the pesticides considered.
- An annual evaluation procedure should be developed including a review of the effectiveness of pesticide applications, impact on buffers and sensitive areas (including potable wells), public concerns, and recent toxicological information on pesticides used/proposed for use. If individual or public potable wells are located in the proximity of commercial pesticide applications, contact the regional Ecology hydrologist to determine if additional pesticide application control measures are necessary.
- Rinsate from equipment cleaning and/or triple-rinsing of pesticide containers should be used as product or recycled into product.

For more information, contact the WSU Extension Home-Assist Program at 253-445-4556; Bio-Integral Resource Center (BIRC), P.O. Box 7414, Berkeley, CA 94707; or the Washington Department of Ecology to obtain “Hazardous Waste Pesticides” (Publication #89-41); contact EPA to

obtain a publication entitled "Suspended, Canceled and Restricted Pesticides" which lists all restricted pesticides and the specific uses that are allowed. Valuable information from these sources may also be available on the internet.

4.4.6.7 Required BMPs for Vegetation Management

- Use at least an eight-inch topsoil layer with at least 8 percent organic matter to provide a sufficient vegetation–growing medium.
- Select the appropriate turf grass mixture for climate and soil type based on recommendations from a licensed landscape architect.
- Selection of desired plant species can be made by adjusting the soil properties of the subject site. For example, a constructed wetland can be designed to resist the invasion of reed canary grass by layering specific strata of organic matters (e.g., compost forest product residuals) and creating a mildly acidic pH and carbon-rich soil medium. Consult a soil restoration specialist for site-specific conditions.
- Aerate lawns regularly in areas of heavy use, where the soil tends to become compacted. Aeration shall be conducted while the grasses in the lawn are growing most vigorously. Remove layers of thatch greater than ¾-inch deep.
- Set the mowing height at the highest acceptable level and mow at times and intervals designed to minimize stress on the turf. Generally mowing only 1/3 of the grass blade height will prevent stressing the turf.

4.4.6.8 Fertilizer Management:

- Fertilization needs vary by site depending on plant, soil, and climatic conditions. Evaluation of soil nutrient levels through regular testing ensures the best possible efficiency and economy of fertilization. For details on soils testing, contact the Pierce Conservation District or Cooperative Extension Service.
- Fertilizers shall be applied in amounts appropriate for the target vegetation and at the time of year that minimizes losses to surface and groundwaters. Do not fertilize during a drought or when the soil is dry. Alternatively, do not apply fertilizers within three days prior to predicted rainfall. The longer the period between fertilizer application and either rainfall or irrigation, the less fertilizer runoff occurs.
- Use slow release fertilizers such as methylene urea, IDBU, or resin coated fertilizers when appropriate, generally in the spring. Use of slow release fertilizers is especially important in areas with sandy or gravelly soils.
- Time the fertilizer application to periods of maximum plant uptake. Generally fall and spring applications are recommended.
- Properly trained persons shall apply all fertilizers. Fertilizers shall not be applied to grass swales, filter strips, or buffer areas that drain to surface water bodies.

4.4.6.9 Integrated Pest Management

An IPM program might consist of the following steps:

1. Correctly identify problem pests and understand their life cycle.
2. Establish tolerance thresholds for pests.
3. Monitor to detect and prevent pest problems.
4. Modify the maintenance program to promote healthy plants and discourage pests.
5. Use cultural, physical, mechanical, or biological controls first if pests exceed the tolerance thresholds.
6. Evaluate and record the effectiveness of the control and modify maintenance practices to support lawn or landscape recovery and prevent recurrence.

For an elaboration of these steps refer to Volume IV, Appendix C – *Example of an Integrated Pest Management Program*.

4.4.7 BMP A307: Painting, Finishing and Coating of Vehicles, Boats, Buildings and Equipment

4.4.7.1 Description of Pollutant Sources

Surface preparation and the application of paints, finishes, and/or coatings to vehicles, boats, buildings, and/or equipment outdoors can be sources of pollutants. Potential pollutants include organic compounds, oils and greases, heavy metals, and suspended solids.

4.4.7.2 Pollutant Control Approach

Cover and contain painting and sanding operations and apply good housekeeping and preventive maintenance practices to prevent the contamination of stormwater with painting overspray and grit from sanding.

4.4.7.3 Required BMPs

- Train employees in the careful application of paints, finishes, and coatings to reduce misuse and over spray. Use ground or drop cloths or temporary berms underneath outdoor painting, scraping, sandblasting work, and properly clean and temporarily store collected debris daily.
- Do not conduct spraying, blasting, or sanding activities over open water or where wind may blow paint into water.
- Wipe up spills with rags and other absorbent materials immediately. Do not hose down the area to a storm drain, receiving water, or conveyance ditch to receiving water.
- On dock areas, sweep or vacuum rather than hose down debris. Collect any hose water generated and convey to appropriate treatment and disposal.
- Use a storm drain cover, filter fabric, or similarly effective runoff control device if dust, grit, washwater, or other pollutants may escape the work area and enter a catch basin. The containment device(s) must be in place at the beginning of the workday. Collect contaminated runoff and solids and properly dispose of such wastes before removing the containment device(s) at the end of the workday.
- Use a ground cloth, pail, drum, drip pan, tarpaulin, or other protective device (e.g. plastic wading pool) for activities such as paint mixing and tool cleaning outside or where spills can contaminate stormwater.
- Properly dispose of all wastes and prevent all uncontrolled releases to the air, ground, or water.
- Clean brushes and tools covered with non-water-based paints, finishes, or other materials in a manner that allows collection of used solvents (e.g., paint thinner, turpentine, xylol, etc.) for recycling or proper disposal.
- Store toxic materials under cover (tarp, etc.) during precipitation events and when not in use to prevent contact with stormwater.

- Enclose and/or contain all work while using a spray gun or conducting sand blasting and in compliance with applicable air pollution control, OSHA, and WISHA requirements. Do not conduct outside spraying, grit blasting, or sanding activities during windy conditions which render containment ineffective.

4.4.7.4 Recommended BMPs

- Clean paintbrushes and tools covered with water-based paints in sinks connected to sanitary sewers or in portable containers that can be dumped into a sanitary sewer drain.
- Recycle paint, paint thinner, solvents, pressure wash water, and any other recyclable materials.
- Use efficient spray equipment such as electrostatic, air-atomized, high volume/low pressure, or gravity feed spray equipment.
- Purchase recycled paints, paint thinner, solvents, and other products if feasible.

4.4.8 BMP A308: Commercial Printing Operations

4.4.8.1 Description of Pollutant Sources

Materials used in the printing process include inorganic and organic acids, resins, solvents, polyester film, developers, alcohol, vinyl lacquer, dyes, acetates, and polymers. Waste products may include waste inks and ink sludge, resins, photographic chemicals, solvents, acid and alkaline solutions, chlorides, chromium, zinc, lead, spent formaldehyde, silver, plasticizers, and used lubricating oils. As the printing operations are conducted indoors, the only likely points of potential contact with stormwater are the outside temporary waste material storage area and area where chemicals are offloaded at external unloading bays. Pollutants can include TSS, pH, heavy metals, oil and grease, and COD.

4.4.8.2 Pollutant Control Approach

Ensure appropriate disposal and NPDES permitting of process wastes. Cover and contain stored raw and waste materials.

4.4.8.3 Required BMPs

- Discharge process wastewaters to a sanitary sewer (if approved by the City of Auburn) or to an approved process wastewater treatment system. Contact the City of Auburn Sanitary Sewer Utility at 253-931-3010 for discharge requirements.
- Do not discharge process wastes or wastewaters into storm drains or surface water.
- Determine whether any of these wastes qualify for regulation as dangerous wastes and dispose of them accordingly.
- Store raw materials or waste materials that could contaminate stormwater in covered and contained areas.

4.4.8.4 Recommended BMPs

- Train all employees in pollution prevention, spill response, spill reporting, and environmentally acceptable materials handling procedures.
- Store materials in proper, appropriately labeled containers. Identify and label all chemical substances.
- All stormwater management devices should be inspected regularly and maintained as necessary.
- Try to use press washes without listed solvents, and with the lowest VOC content possible. Do not evaporate ink cleanup trays to the outside atmosphere.
- Place cleanup sludges into a properly labeled container with a tight lid and dispose of as hazardous waste. Do not dispose of cleanup sludges in the garbage or in containers of soiled towels.

For additional information on pollution prevention the following Washington Department of Ecology publications are recommended: A Guide for Screen Printers, Publication #94-137 and A Guide for Lithographic Printers, Publication #94-139.

4.4.9 BMP A309: Manufacturing Operations – Outside

4.4.9.1 Description of Pollutant Sources

Manufacturing pollutant sources include outside process areas, stack emissions, and areas where manufacturing activity has taken place in the past and significant pollutant materials remain and are exposed to stormwater.

4.4.9.2 Pollution Control Approach

Cover and contain outside manufacturing and prevent stormwater run-on and contamination, where feasible.

4.4.9.3 Required BMPs

- Sweep paved areas regularly, as needed, to prevent contamination of stormwater. Vacuum sweeping is preferred.
- Alter the activity by eliminating or minimizing the contamination of stormwater.
- Enclose the activity (see Figure IV-4-9). If possible, enclose the manufacturing activity in a building.
- Cover the activity and connect floor drains to a sanitary sewer, if approved by the City of Auburn. Berm or slope the floor as needed to prevent drainage of pollutants to areas outside (see Figure IV-4-10).
- Isolate and segregate pollutants, as feasible. Convey the segregated pollutants to a sanitary sewer, process treatment, or dead-end sump, depending on available methods and applicable permit requirements.

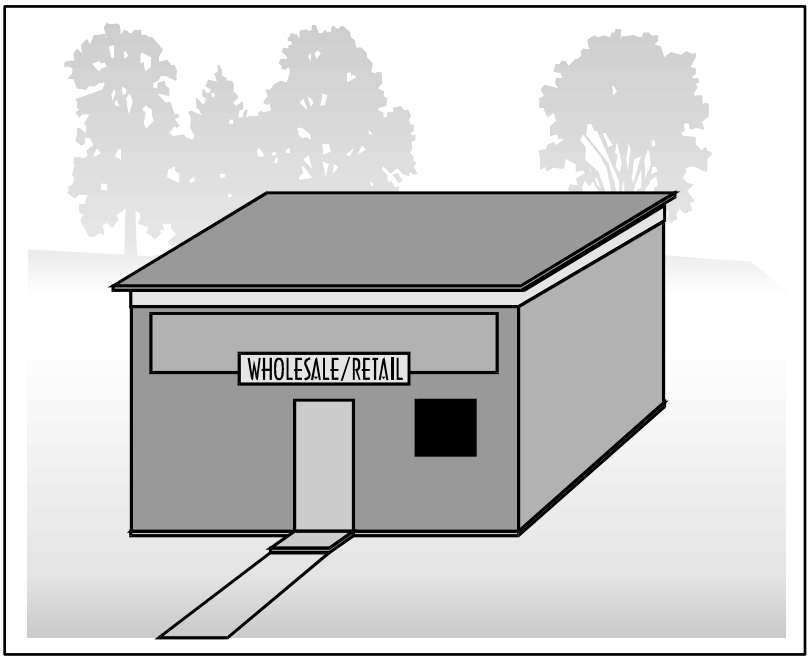

Figure IV-4-9. Enclose the Activity

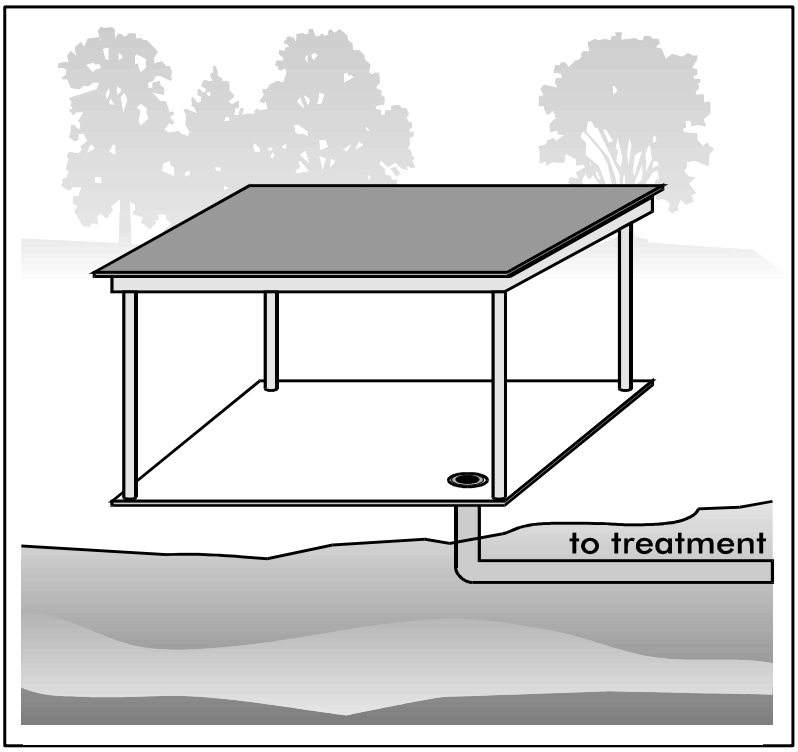

Figure IV-4-10. Cover the Activity

4.5 Storage and Stockpiling Activities

4.5.1 BMP A401: Storage or Transfer (Outside) of Solid Raw Materials, By-Products or Finished Products

4.5.1.1 Description of Pollutant Sources

Solid raw materials, by-products, or products such as gravel, sand, salts, topsoil, compost, logs, sawdust, wood chips, lumber and other building materials, concrete, and metal products are typically stored outside in large piles, stacks, etc. at commercial or industrial establishments. Contact of outside bulk materials with stormwater can cause leachate and/or erosion of the stored materials. Contaminants may include TSS, BOD, organics, and dissolved salts (sodium, calcium, magnesium chloride, etc).

4.5.1.2 Pollutant Control Approach

Provide impervious containment with berms, dikes, etc. and/or cover to prevent run-on and discharge of leachate, pollutant(s) and TSS.

4.5.1.3 Required BMPs

- Do not hose down the contained stockpile area to a storm drain or other conveyance leading to a storm drain or receiving water.
- Choose one or more of the source control BMP options listed below for stockpiles greater than 5 cubic yards of erodible or water soluble materials such as soil, road deicing salts, compost, unwashed sand and gravel, sawdust, etc. or for outside storage areas for solid materials such as logs, bark, lumber, metal products, etc.:
  - Store in a building or paved and bermed covered area as shown in Figure IV-4-11.
  - Place temporary plastic sheeting (polyethylene, polypropylene, hypalon, or equivalent) over the material as shown in Figure IV-4-12.

    OR

  - Pave the area and install a stormwater drainage system. Place curbs or berms along the perimeter of the area to prevent the run-on of uncontaminated stormwater and to collect and convey runoff to treatment. Slope the paved area in a manner that minimizes contact between stormwater (e.g., pooling) and leachable materials in compost, logs, bark, wood chips, etc.
  - For large stockpiles that cannot be covered, implement containment practices at the perimeter of the site and at any catch basins as needed to prevent erosion and discharge of the stockpiled material offsite or to a storm drain. Ensure that contaminated stormwater is not discharged directly to catch basins without being conveyed through a treatment BMP. For log yards see Ecology publication “Industrial Stormwater General Permit Implementation Manual for Log Yards:, publication # 04-10-031.

- Convey contaminated stormwater from the stockpile area to a wet pond, wet vault, settling basin, media filter, or other appropriate treatment system, depending on the contaminate.

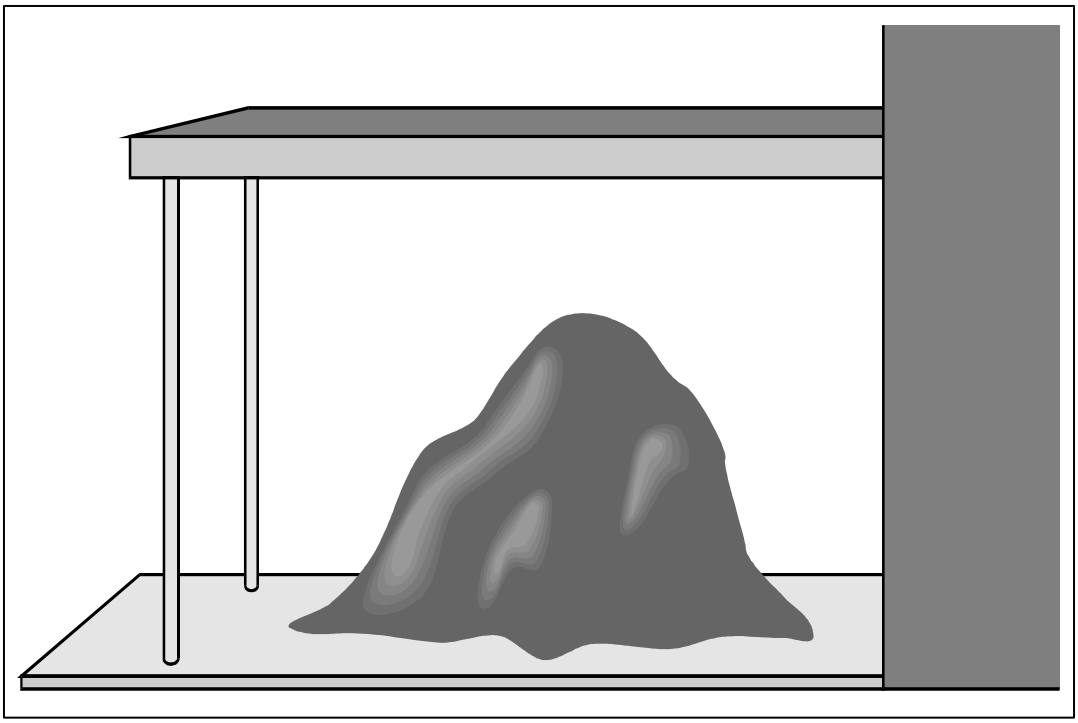

Figure IV-4-11. Covered Storage Area for Bulk Solids (including berm if needed)

4.5.1.4 Recommended BMPs

- Maintain drainage areas in and around storage of solid materials with a minimum slope of 1.5 percent to prevent pooling and minimize leachate formation. Areas should be sloped to drain stormwater to the perimeter where it can be collected, or to internal drainage “alleyways” where material is not stockpiled.
- Sweep paved storage areas regularly for collection and disposal of loose solid materials.
- If and when feasible, collect and recycle water-soluble materials (leachates) to the stockpile.
- Stock cleanup materials such as brooms, dustpans, and vacuum sweepers near the storage area.

Figure IV-4-12. Material Covered with Plastic Sheeting

4.5.2 BMP A402: Storage and Treatment of Contaminated Soils

4.5.2.1 Description of Pollutant Sources

This activity applies to businesses and agencies that store and treat soils contaminated with toxic organic compounds, petroleum products, or heavy metals. Stormwater runoff that comes in contact with contaminated soil can carry those contaminants along with loose dirt into receiving waters.

4.5.2.2 Pollutant Control Approach

Ecology regulates businesses disposing and treating contaminated soil. A permit from the Puget Sound Clean Air Agency is required if the treatment method for removing soil contaminants involves forcing air through, or sucking air from, the soil. In addition, a Special Approved Discharge Authorization from the Metro-King County may be required if potentially contaminated water is to be discharged from the site. The Puget Sound Clean Air Agency can be reached at 1-800-552-3565. Contact the City of Auburn Sanitary Sewer Utility at 253-931-3010.

4.5.2.3 Required BMPs

The BMPs included here are intended as a supplement to other regulations. The following BMPs or equivalent measures are required of all businesses engaged in storage and treatment of contaminated soils:

- The storage area for contaminated soils must be enclosed indoors, covered, or contained by a curb, dike, or berm constructed around the material storage area. If the contaminated soils are covered, stormwater run-on protection must also be provided. BMP S107 provides further details on containment and run-on prevention.
- Employees must be educated on methods to prevent contamination from leaving the site.
- Cleanup materials must be stocked near the storage area.
- Gutters, storm drains, catch basins, and other drainage system features on the site must be cleaned following the completion of site work, or at least once per year, whichever comes first. Sediments from such cleaning must be disposed of properly. See BMP S109 and S102 for details on catch basin cleaning and disposal options.

4.5.2.4 Recommended BMPs

The following BMPs are not required but can provide additional pollution protection:

- If feasible, the storage area should be swept weekly for collection of stray soil, which can be added back to the piles or properly disposed. See BMP S102 for information on disposal options.
- Implement one of the following treatment BMPs in conjunction with a runoff containment plan:
  - Vegetated biofilter.
  - Equivalent BMP for the targeted pollutant (see Volume V).

The use of any treatment BMP must not result in the violation of groundwater, surface water, wastewater, or drinking water quality standards.

4.5.3 BMP A403: Temporary Storage or Processing of Fruits or Vegetables

4.5.3.1 Description of Pollutant Sources

This activity applies to businesses that temporarily store fruits and vegetables outdoors prior to processing or sale, or that crush, cut, or shred fruits or vegetables for wines, frozen juices, and other food and beverage products. These businesses may include farmers markets, fruit and vegetable stands, and fruit and vegetable processors. Nutrients and soil washing off of fruit and vegetables can have a detrimental effect on receiving waters.

Pollutants of concern include nutrients, suspended solids, biochemical oxygen demand (BOD), and color.

4.5.3.2 Pollutant Control Approach

Store and process fruits and vegetables indoors or under cover whenever possible. Educate employees about proper procedures. Eliminate illicit connections to the storm drainage system. Cover and contain operations and apply good housekeeping and preventive maintenance practices to prevent the contamination of stormwater.

4.5.3.3 Required BMPs

The following BMPs or equivalent measures are required of all businesses engaged in storage of fruits or vegetables:

- Employees must be educated on benefits of keeping a clean storage area.
- Eliminate illicit connections to the storm drainage system. See BMP S101 for details on detecting and eliminating these connections.
- Water used to clean produce or other liquid wastes cannot enter the storm drainage system unless treated. Minimize the use of water when cleaning produce to avoid excess runoff.
- Cleanup materials, such as brooms and dustpans, must be kept near the storage area.
- Gutters, storm drains, and catch basins on the property must be cleaned as needed. See BMP S109 for details on catch basin cleaning requirements.

The following BMPs or equivalent measures are required of all businesses that process fruits or vegetables:

- Eliminate illicit connections to the storm drainage system. See BMP S101 for details on detecting and eliminating these connections.
- Employees must be educated on benefits of keeping a clean processing area.
- Cleanup materials, such as brooms, dustpans, and shovels, must be kept near the storage area.
- The processing area must be swept or shoveled daily to collect dirt and fruit and vegetable fragments for proper disposal.

- The processing area must be enclosed in a building or shed, or covered with provisions for stormwater run-on prevention. See BMP S104, S105, and S107 for more on covering and run-on prevention.

  OR

  The processing area must be paved and sloped to a sanitary sewer drain, holding tank, or process treatment system collection drain, and stormwater run-on prevention must be provided for the processing area. Call the Auburn Permit Center at 253-931-3090 for information on discharging to the sanitary sewer. See BMP S106 and S103 for details on paving and drainage.

4.5.3.4 Recommended BMPs

The following BMPs are not required but can provide additional pollution protection:

- Cover storage areas for fruits and vegetables. See BMP S104 and S105 for more details on coverings.
- A containment curb, dike, or berm can be used to prevent offsite runoff from storage or processing areas and also to prevent stormwater run-on. See BMP S107 for more information. Note that run-on prevention is required for processing areas, but not for storage areas.
- The storage area should be swept or shoveled daily to collect dirt and fruit and vegetable fragments for proper disposal. Keep hosing to a minimum.
- Use one or a combination of the following treatment BMPs:
  - Wet pond or wet vault to treat storage area runoff.
  - Vegetated biofilter to treat storage area runoff.
  - Catch basin with appropriate insert for the targeted pollutants to treat storage area runoff. See S109 for information on catch basin cleaning.
  - Equivalent BMP (see Volume V).

4.5.4 BMP A404: Storage of Solid Wastes and Food Wastes

4.5.4.1 Description of Pollutant Sources

This activity applies to facilities such as hospitals, restaurants, meat and seafood markets, veterinarian clinics, schools, grocery stores, assisted living centers, and group assembly halls that store solid wastes and food wastes outdoors. This includes ordinary garbage. If improperly stored, these wastes can contribute a variety of different pollutants to stormwater. Requirements for handling and storing solid waste may include a permit from the local health departments; Tacoma-Pierce County Health Department or Seattle-King County Health Department

NOTE: Dangerous solid wastes must be stored and handled under special guidelines. Businesses and agencies that store dangerous wastes must follow specific regulations outlined by the Department of Ecology. Ecology regulations are outlined in Volume IV, Chapter 5. Please contact the Department of Ecology at 360-407-6300 for the specific requirements and permitting information.

Pollutants of concern include toxic organic compounds, oils and greases, heavy metals, nutrients, suspended solids, chemical oxygen demand (COD), and biochemical oxygen demand (BOD).

4.5.4.2 Pollutant Control Approach

Store wastes in suitable containers with leak-proof lids. Sweep or shovel loose solids. Educate employees about the need to check for and replace leaking containers.

4.5.4.3 Required BMPs

The following BMPs are required of all businesses and public agencies engaged in storage of non-dangerous solid wastes or food wastes:

- All solid and food wastes must be stored in suitable containers. Piling of wastes without any cover is prohibited.
- Waste storage areas and trash enclosures for food or liquid bearing wastes must be connected to the sanitary sewer and bermed or sloped to prevent stormwater run-on.
- Trash compactors or dumpsters for food or liquid-bearing wastes shall drain to the sanitary sewer system and be designed as required by the City of Auburn.
- Storage containers must be checked for leaks and replaced if they are leaking, corroded, or otherwise deteriorating. If storage containers contain liquid wastes of any kind, then the container shall be located on a pad equipped with a drainage system connected to the City sanitary sewer.
- Storage containers must have leak-proof lids or be covered by some other means. Lids must be kept closed at all times. This is especially important for dumpsters, as birds can pick out garbage and drop it, promoting rodent, health, and stormwater problems.

  OR

- If lids cannot be provided for the waste containers, or they cannot otherwise be covered, there is another option: a designated waste storage area must be provided

with a containment berm, dike, or curb, and the designated area must drain to a sanitary sewer or holding tank for further treatment. See BMP S107 and S103 for more information.

- Do not completely fill containers of waste grease and oil. Leave a minimum of four inches of freeboard to prevent spills when the containers are moved or handled for recycling.
- Employees must be trained to check storage containers frequently for leaks and to ensure that the lids are on tightly.
- The waste storage area must be swept or otherwise cleaned frequently to collect all loose solids for proper disposal in a storage container. Do not hose the area to collect or clean solids.
- If containers are cleaned, all rinse water from cleaning must be disposed of in a sanitary sewer or septic system.
- Inspect regularly and clean out catch basins on the property that receive drainage from waste storage area. See BMP S109 for details on catch basin cleaning.

4.5.4.4 Recommended BMPs

The following BMPs are not required, but can provide additional pollution protection:

- If the amount of waste accumulated appears to frequently exceed the capacity of the storage container, then another storage container should be obtained and utilized.
- Store containers such that wind will not be able to knock them over.
- Designate a storage area, pave the area, and slope the drainage to a holding tank or sanitary sewer drain. If a holding tank is used, the contents must be pumped out before the tank is full and properly disposed. See BMP S102 for more information on disposal options.
- Compost appropriate wastes. Contact Auburn Solid Waste and Recycling Utility Recycling at 253-931-3038 for more information on composting.
- Recycle solid wastes. The Industrial Materials Exchange (IMEX) program facilitates the transfer of excess materials and wastes to those who can use them. IMEX can be reached at 206-296-4899, or use the IMEX computer bulletin board modem access number at 1-800-858-6625.

4.5.5 BMP A405: Recyclers and Scrap Yards

4.5.5.1 Description of Pollutant Sources

Includes businesses that reclaim various materials for resale or for scrap, such as vehicles and vehicle/ equipment parts, construction materials, metals, computers, appliances, beverage containers, and papers.

Potential sources of pollutants include paper, plastic, metal scrap debris, engines, transmissions, radiators, batteries, and other materials that contain fluids or are contaminated with fluids. Other pollutant sources include leachate from metal components, contaminated soil, and the erosion of soil. Activities that can generate pollutants include the transfer, dismantling, and crushing of vehicles and scrap metal; the transfer and removal of fluids; maintenance and cleaning of vehicles, parts, and equipment; and storage of fluids, parts for resale, solid wastes, scrap parts, and materials, equipment and vehicles that contain fluids, generally in uncovered areas.

Potential pollutants typically found at vehicle recycle and scrap yards include oil and grease, ethylene and propylene glycol, total suspended solids, BOD, heavy metals, and acidic pH.

4.5.5.2 Required BMPs

For facilities subject to Ecology's Industrial Stormwater General Permit refer to BMP Guidance Document #94-146, "Vehicle Recyclers: A Guide to Implementing the Industrial Stormwater General National Pollutant Discharge Elimination System (NPDES) Permit Requirements", Washington Department of Ecology, January 2006 for selection of BMPs. The BMPs in that guidance document can also be applied to scrap material recycling facilities (depending on the pollutant sources existing at those facilities) and to non-permitted facilities.

Contact the City of Auburn Public Works Department at 253-931-3010 if contact stormwater or process wastewater is to be discharged from your site.

4.5.6 BMP A406: Treatment, Storage or Disposal of Dangerous Wastes

This activity applies to businesses and public agencies that are permitted by the Washington State Department of Ecology (DOE) to treat, store, or dispose of dangerous wastes. DOE regulates these facilities with specific requirements, which include the need for a National Pollutant Discharge Elimination System (NPDES) permit. Detailed BMPs are not included in this manual since site requirements for these facilities are well beyond the level of typical BMP applications. See Chapter 5 of this volume for reference information.

Contact the City of Auburn Sanitary Sewer Utility at 253-931-3010 for their requirements. An Industrial Wastewater Discharge Permit is required before discharging contact stormwater or process wastewater to the municipal sewer system. The Department of Ecology regulates the treatment, storage and disposal of Dangerous Wastes.

4.5.7 BMP A407: Storage of Liquid, Food Waste or Dangerous Waste Containers

4.5.7.1 Description of Pollutant Sources

Steel and plastic drums with volumetric capacities of 55 gallons or less are typically used at industrial facilities for storage of liquids and powders. The BMPs specified below apply to container(s) located outside a building used for temporary storage of accumulated food wastes, vegetable or animal grease, used oil, liquid feedstock cleaning chemicals, or Dangerous Wastes (liquid or solid), unless the business is permitted by Ecology to store the wastes. Leaks and spills of pollutant materials during handling and storage are the primary sources of pollutants. Oil and grease, acid/alkali pH, BOD, and metals are potential pollutant constituents.

4.5.7.2 Pollutant Control Approach

Store containers in impervious containment under a roof or other appropriate cover, or in a building. For roll-containers (for example, dumpsters) that are picked up directly by the collection truck, a filet can be placed on both sides of the curb to facilitate moving the dumpster. If a storage area is to be used on-site for less than 30 days, a portable temporary secondary system like that shown in Figure IV-4-13 can be used in lieu of a permanent system as described above.

4.5.7.3 Required BMPs

- Place tight-fitting lids on all containers. Provide adequate freeboard/headspace.
- Place drip pans beneath all mounted container taps and at all potential drip and spill locations during filling and unloading of containers.
- Inspect container storage areas regularly for corrosion, structural failure, spills, leaks, overfills, and failure of piping systems. Check containers daily for leaks/spills. Replace containers, secure lids, and replace and tighten bungs in drums, as needed.
- Drums stored in an area where unauthorized persons may gain access must be secured in a manner that prevents accidental spillage, pilferage, or any unauthorized use (see Figure IV-4-14).
- If the material is a Dangerous Waste, the business owner must comply with any additional Ecology requirements as specified in Chapter 5.
- Storage of reactive, ignitable, or flammable liquids must comply with the Uniform Fire Code.
- Cover dumpsters or keep them under cover, such as a lean-to, to prevent the entry of stormwater. Replace or repair leaking garbage dumpsters.
- Drain dumpsters and/or dumpster pads to sanitary sewer. Keep dumpster lids closed. Install waterproof liners.
- Keep containers with Dangerous Waste, food waste or other potential pollutant liquids inside a building unless this is impracticable due to site constraints or Uniform Fire Code requirements.

- Store containers in a designated area that is covered, bermed, or diked; paved; and impervious in order to contain leaks and spills (see Figure IV-4-15). The secondary containment shall be sloped to drain into a dead-end sump for the collection of leaks and small spills.
- For liquid wastes, surround the containers with a dike as illustrated in Figure IV-4-15. The dike must be of sufficient height to provide a volume of 10 percent of the total enclosed container volume or 110 percent of the volume contained in the largest container, whichever is greater, or, if a single container, 110 percent of the volume of that container.
- Where material is temporarily stored in drums, a containment system can be used, as illustrated, in lieu of the above system (see Figure IV-4-13).
- Place containers mounted for direct removal of a liquid chemical for use by employees inside a containment area as described above. Use a drip pan during liquid transfer (see Figure IV-4-16).
- For contaminated stormwater in the containment area, connect the sump outlet to a sanitary sewer, if approved by the City of Auburn, or to appropriate treatment such as an API or CP oil/water separator, catch basin filter, or other appropriate system (see Volume V). Equip the sump outlet with a normally closed and locked steel line and valve to prevent the release of spilled or leaked liquids, especially flammables (in compliance with Fire Codes), and dangerous liquids. This valve may be opened only for the conveyance of contaminated stormwater to treatment. Maintain a log to record inspections and when the containment area is drained to treatment.
- Another option for discharge of contaminated stormwater is to provide a dead-end sump or catchment. Stormwater can then be pumped to a tank truck or other appropriate vehicle for off-site treatment and/or disposal.

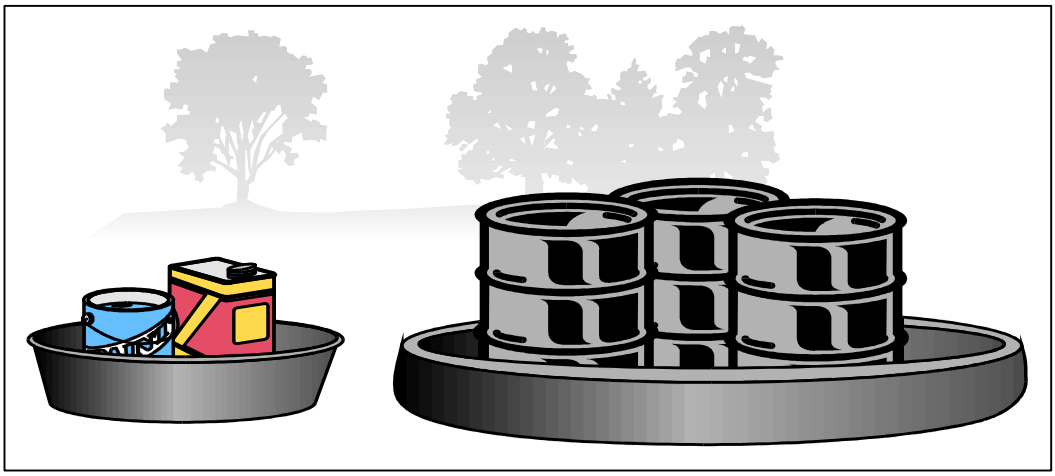

Figure IV-4-13. Secondary Containment Vessel

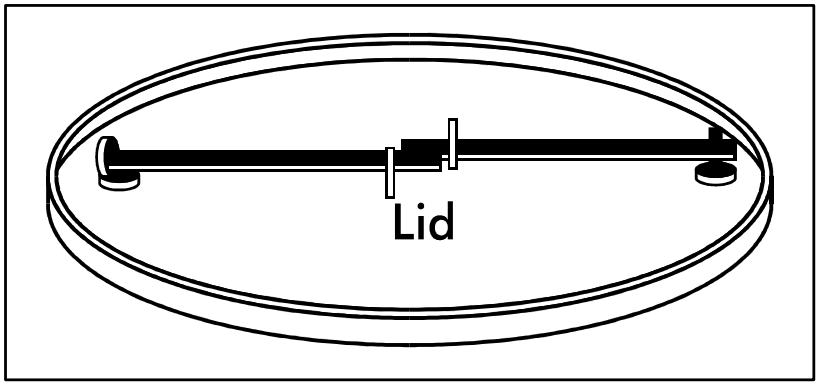

Figure IV-4-14. Locking System for Drum Lid

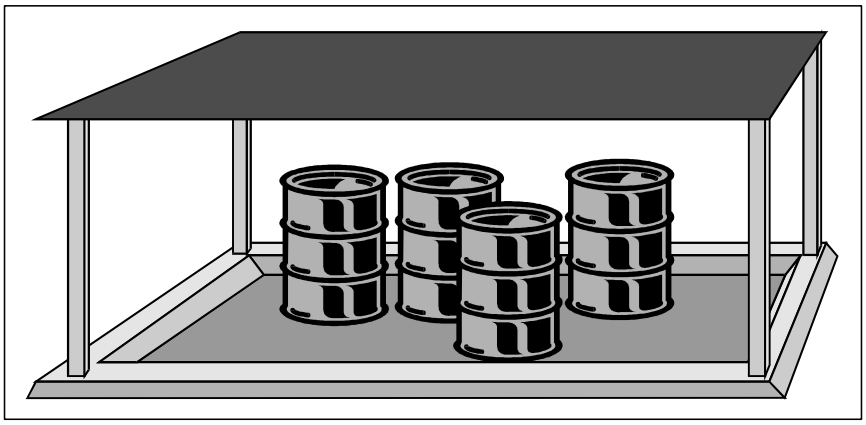

Figure IV-4-15. Covered and Bermed Containment Area

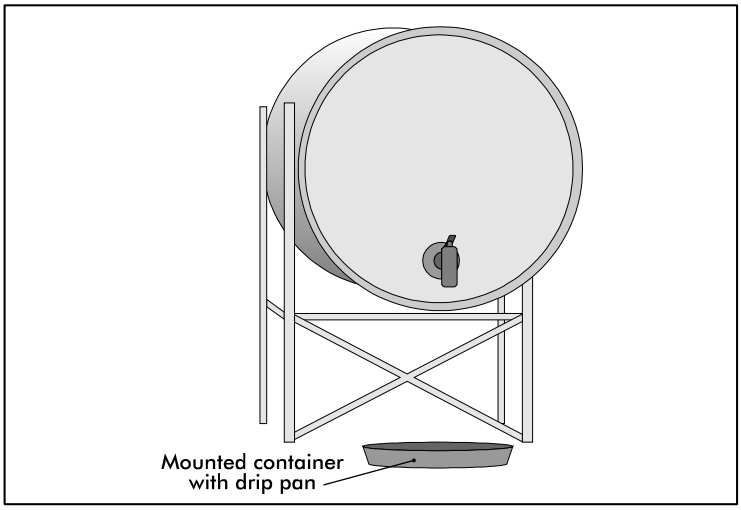

Figure IV-4-16. Mounted Container

4.5.8 BMP A408: Storage of Liquids in Above-Ground Tanks

4.5.8.1 Description of Pollutant Sources

Above-ground tanks containing liquids (excluding uncontaminated water) may be equipped with a valved drain, vent, pump, and bottom hose connection. These tanks may be heated with steam heat exchangers equipped with steam traps. Leaks and spills can occur at connections and during liquid transfer. Oil and grease, organics, acids, alkalis, and heavy metals in tank water and condensate drainage can also cause stormwater contamination at storage tanks.

4.5.8.2 Pollutant Control Approach

Install secondary containment or a double-walled tank. Slope the containment area to a drain with a sump. Stormwater collected in the containment area may need to be discharged to treatment such as an API or CP oil/water separator, or equivalent BMP. Add safeguards against accidental releases including protective guards around tanks to protect against vehicle or forklift damage, and tag valves to reduce human error. *Tank water and condensate discharges are process wastewater that may need an NPDES Permit or approval to discharge to the sanitary system.*

4.5.8.3 Required BMPs for All Tanks

- Inspect the tank containment areas regularly to identify leaks/spills, cracks, corrosion, etc. in problem components such as fittings, pipe connections, and valves.
- Develop a spill plan as per the requirements of BMP A714: Spills of Oil and Hazardous Substances.
- Place adequately sized drip pans beneath all mounted taps and drip/spill locations during filling/unloading of tanks. Valved drain tubing may be needed in mounted drip pans.
- Sweep and clean the tank storage area regularly, if paved.
- Replace or repair tanks or other components that are leaking, corroded, or otherwise deteriorating.
- All installations shall comply with the International Fire Code and the National Electric Code.
- Locate permanent tanks in impervious (Portland cement concrete or equivalent) secondary containment surrounded by dikes as illustrated in Figure IV-4-17, or use UL approved double-walled tanks.
- Double-walled tanks with exposure to traffic must be protected with bollards, jersey barriers, or walls. Bollards should be at least 4 feet high, at least 3 feet from the tank, and no more than 4 feet apart.
- Include a tank overfill protection system to minimize the risk of spillage during loading.
- There must be at least 5 feet of space between the tanks and any enclosures.

4.5.8.4 Required BMPs for Single-walled Tanks

- The containment volume shall be 100% of the volume of the largest tank plus the volume of stormwater from rain events up to a 25-year, 24-hour storm within the containment area or 110% of the volume of the largest tank, whichever is greater.
- There must be at least 5 feet of space between the tanks and any enclosures.
- Slope the secondary containment to drain to a dead-end sump (optional), or equivalent, for the collection of small spills.
- If the tank containment area is uncovered, equip the outlet from the spill-containment sump with a shutoff valve, which is normally closed and locked. Valves for flammables containment shall be made of steel. Valves for corrosives containment shall be compatible with the material being stored.
- The external valve may be opened manually only to convey contaminated stormwater to an approved treatment or disposal facility, or to convey uncontaminated stormwater to a storm drain. Evidence of contamination can include the presence of visible sheen, color, or turbidity in the runoff, or existing or historical operational problems at the facility. Simple pH measurements with litmus or pH paper can be used for areas subject to acid or alkaline contamination.
- At petroleum tank farms, convey stormwater contaminated with floating oil or debris in the contained area through an API or CP-type oil/water separator (Volume V, Treatment BMPs) or other approved treatment facility prior to discharge to storm drain or surface water. Direct discharges require an NPDES permit from the Department of Ecology.
- Loading racks and transfer areas associated with tank farms shall provide spill containment and treatment sized to encompass the largest vessel (trailer, railcar, intermodal tank) using the area.

4.5.8.5 Recommended BMPs for Double-walled Tanks

- Tank pads and the fuel delivery area should be protected from stormwater run-on but sized and sloped to capture any leaks or spills from the tank or fueling process.
- Feed and return lines from the tanks shall be doubled walled or entirely contained within the utility corridor.
- Catch basins receiving drainage from the tank pad and fueling area should be oversized and have down-turned elbows in their outlets or flow to an appropriately sized oil/water separator.

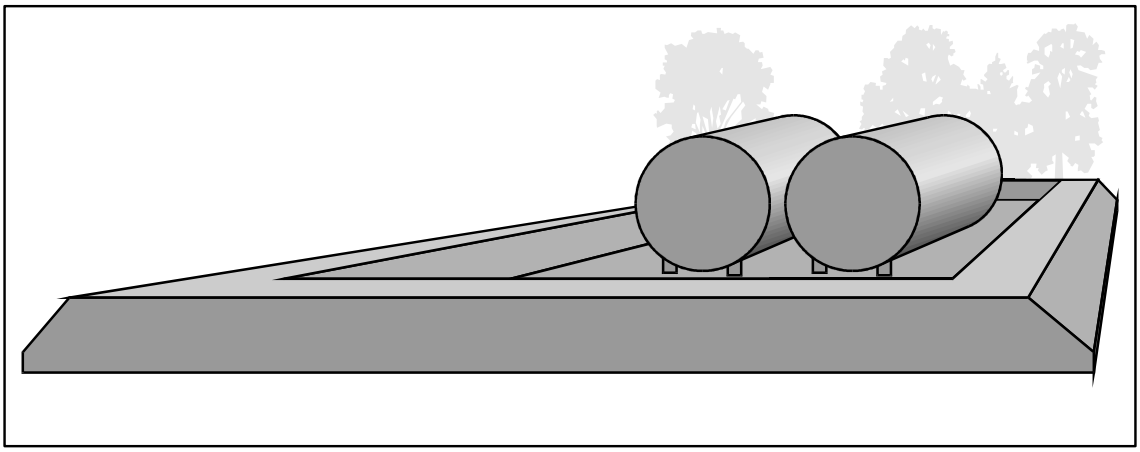

Figure IV-4-17. Above-Ground Tank Storage

4.5.9 BMP A409: Parking and Storage for Vehicles and Equipment

4.5.9.1 Description of Pollutant Sources

Parked vehicles at public and commercial parking lots and garages, such as retail store, fleet vehicle (including rent-a-car lots and car dealerships), equipment sale and rental parking lots, and parking lot driveways, can be sources of toxic hydrocarbons and other organic compounds, oils and greases, metals, and suspended solids.

4.5.9.2 Required BMPs

- If washing of a parking lot is conducted, discharge the wash water to a sanitary sewer (if allowed by the City of Auburn) or other approved wastewater treatment system, or collect it for off-site disposal.
- Do not hose down the area to a storm drain or receiving water. Sweep (vacuum sweeping is preferred) parking lots, storage areas, and driveways regularly to collect dirt, waste, and debris.
- An oil removal system such as an API or CP oil and water separator, catch basin filter, or equivalent BMP (see VV), approved by the City of Auburn, is applicable for parking lots meeting the threshold vehicle traffic intensity level of a high-use site. For more information on high-use sites, refer to Volume V, Chapter 1.
- Covered floors of parking garages must drain to the sanitary sewer through an approved oil/water separator. Uncovered floors must be routed to the storm drainage system through an approved treatment device.

4.6 Construction and Demolition Activities

4.6.1 BMP A501: Clearing, Grading and Preparation of Construction Sites

This activity applies to businesses and municipal agencies that develop lands for construction. It also applies to residences that undertake large yard clearing and grading projects. Stormwater runoff from bare ground can be loaded with dirt and other pollutants. This material can clog ditches and stream channels, thus reducing carrying capacity and increasing flooding, as well as smothering spawning beds for fish. Simply controlling runoff and not allowing it to leave the site will prevent these harmful effects. Clearing, grading, and preparation activities are covered in detail in Volume II of this manual, Construction Stormwater Pollution Prevention. Grading activities are also regulated in the City of Auburn by the Grading and Excavation Code, Chapter 15.74 ACC.

Control of stormwater run-on and soil stabilization is critical. Limiting the area to be cleared and graded during wet weather seasons will make site stabilization and sediment control easier.

Coverage under Ecology's Construction Stormwater General Permit is required for construction sites that result in the disturbance of one acre or more of land. Compliance with the Construction Stormwater Pollution Prevention requirements in Ecology's manual is required, as applicable.

4.6.2 BMP A502: Demolition of Buildings

4.6.2.1 Description of Pollutant Sources

This activity applies to removal of existing buildings by controlled explosions, wrecking balls, or manual methods, and subsequent clearing of the rubble. The loose debris can contaminate stormwater. Pollutants of concern include toxic organic compounds, heavy metals, asbestos, and suspended solids.

4.6.2.2 Pollutant Control Approach

Regularly clean up debris that can contaminate stormwater. Protect the storm drainage system from dirty runoff and loose particles. Sweep paved surfaces daily. Vacuum sweeping is preferred.

4.6.2.3 Required BMPs

The following BMPs or equivalent measures are required of all businesses and public agencies engaged in building demolition:

- Identify and properly abandon all utility connections such as sanitary sewer, gas, fuel lines and tanks.
- If directed to keep water out of the storm system during demolition activity, storm drain covers or a similarly effective containment device must be placed on all nearby drains to prevent dirty runoff and loose particles from entering the storm drainage system. If storm drains are not present, dikes, berms, or other methods must be used to protect overland discharge paths from runoff. See BMP S102 and S107 for more information on runoff control and disposal options.
- Utilize storm drain inlet protection per BMP C220.
- Street gutters, sidewalks, driveways, and other paved surfaces in the immediate area of the demolition must be swept at the end of each work day to collect and properly dispose of loose debris and garbage.

4.6.2.4 Recommended BMPs

The following BMPs are not required, but can provide additional pollution protection:

- Water should be sprayed throughout the site to help control wind blowing of fine materials such as soil, concrete dust, and paint chips. The amount of water must be controlled so that runoff from the site does not occur, yet dust control is achieved. Oils must never be used for dust control.
- If possible, a wall should be constructed to prevent stray building materials and dust from escaping the area during demolition.
- Install catch basin filter inserts to treat site runoff. Additional information about catch basin filter inserts can be found in Volume II, BMP C220.
- Schedule demolition to take place at a dry time of the year.

4.6.3 BMP A503: Building, Repair, Remodeling and Construction

4.6.3.1 Description of Pollutant Sources

This activity refers to activities associated with construction of buildings and other structures, remodeling of existing buildings and houses, and general exterior building repair work. Washing of buildings is covered under A103 Washing, Pressure Washing, and Steam Cleaning. Painting of buildings is covered under A307 Painting, Finishing, and Coating of Vehicles, Boats, Buildings, and Equipment. Concrete pouring is covered under A302 Concrete Pouring and Asphalt Application at Temporary Sites.

Pollutants of concern include toxic organics, suspended solids, heavy metals, asbestos, pH, oils, and greases.

4.6.3.2 Pollutant Control Approach

Employees must be educated about the need to control site activities. Control leaks, spills, and loose material. Utilize good housekeeping practices.

4.6.3.3 Required BMPs

The following BMPs or equivalent measures are required of all businesses engaged in building repair, remodeling, and construction:

- Employees must be educated about the need to control site activities to prevent stormwater pollution, and also must be trained in spill cleanup procedures.
- Spill cleanup materials, appropriate to the chemicals being used on site, must be available at the work site at all times.
- The work site must be cleaned up at the end of each work day, with materials such as solvents put away indoors or covered and secured so that vandals will not have access to them.
- The area must be swept daily to collect loose litter, paint chips, grit, and dirt.
- Absolutely no substance can be dumped on pavement, the ground, or in or toward storm drains, regardless of its content, unless it is only uncontaminated water.
- Bermed ground or drop cloths must be used underneath scraping and sandblasting work. Ground cloths, buckets, or tubs must also be used anywhere that work materials are laid down.
- Tools covered with non-water-based finishes or other materials must be cleaned in a manner that enables collection of used solvents for recycling or proper disposal. See BMP S102 for disposal options.
- Inlet protection as described in Volume II, BMP C220 must be used if dust, grit, wash water, or other pollutants may escape the work area. This is particularly necessary on rainy days. Provide inlet protection over the storm drain at the beginning of the work day. Do not perform outdoor work during wet weather if contaminants could be washed off-site by rainfall.

4.6.3.4 Recommended BMPs

The following BMPs are not required, but can provide additional pollution protection:

- Recycle materials whenever possible.
- Light spraying of water on the work site can control some of the dust and grit that can blow away. Oils must never be used for dust control. Never spray to the point of runoff from the site.
- Activities such as tool cleaning should occur over a ground cloth or within a containment device such as a tub.
- Catch basin filter inserts may be considered.

4.7 Dust Control, and Soil and Sediment Control

4.7.1 BMP A601: Dust Control at Disturbed Land Areas and Unpaved Roadways and Parking Lots

4.7.1.1 Description of Pollutant Sources

Dust can cause air and water pollution problems particularly at demolition sites, disturbed land areas, and unpaved roadways and parking lots.

4.7.1.2 Pollutant Control Approach

Minimize dust generation and apply environmentally friendly and government approved dust suppressant chemicals, if necessary.

4.7.1.3 Required BMPs

- Sprinkle or wet down soil or dust with water as long as it does not result in runoff or a wastewater discharge. Minimize the amount of water to avoid washing pollutants into the storm drainage system. At active construction sites, street sweeping shall be performed prior to washing the street.
- Use only local and/or state government approved dust suppressant chemicals such as those listed in Ecology Publication #96-433, “Techniques for Dust Prevention and Suppression.” See BMP C126, Polyacrylamide for Soil Erosion Protection, in Volume II, Chapter 3 of this manual.
- Avoid excessive and repeated applications of dust suppressant chemicals. Time the application of dust suppressants to avoid or minimize their wash-off by rainfall or human activity such as irrigation.
- Use stormwater containment to prevent the conveyance of solids by stormwater into storm drains or receiving waters.
- The use of motor oil or other oils for dust control is prohibited. Care shall be taken when using lignin derivatives and other high BOD chemicals in excavations or areas easily accessible to surface water or groundwater.
- Consult with the Ecology Northwest Regional Office at 425-649-7000 on discharge permit requirements if the dust suppression process results in a wastewater discharge to the ground, groundwater, storm drain, or surface water.

4.7.1.4 Recommended BMPs for Roadways and Other Trafficked Areas:

- Consider limiting use of off-road recreational vehicles on dust generating land.
- Consider paving unpaved permanent roads, approaches, exits, access lanes, and other trafficked areas at municipal, commercial, and industrial areas.
- Consider paving or stabilizing shoulders of paved roads with gravel, vegetation, or City of Auburn approved chemicals.
- Encourage use of alternate paved routes, if available.

- Vacuum or wet sweep fine dirt and skid control materials from paved roads soon after winter weather ends or as needed.
- Consider using traction sand that is pre-washed to reduce dust emissions.

4.7.1.5 Recommended BMPs for Dust Generating Areas:

- Prepare a dust control plan. Helpful references include: Control of Open Fugitive Dust Sources (EPA-450/3-88-088) and Fugitive Dust Background Document and Technical Information Document for Best Available Control Measures (EPA-450/2-92-004).
- Limit exposure of soil (dust source) as much as feasible.
- Stabilize dust-generating soil by growing and maintaining vegetation, mulching, topsoiling, and/or applying stone, sand, or gravel.
- Apply windbreaks in the soil such as trees, board fences, tarp curtains, bales of hay, etc.
- Cover dust-generating piles with wind-impervious fabric, or equivalent material.

Additional information on dust control can be found in Volume II of this manual.

4.7.2 BMP A602: Dust Control at Manufacturing Sites

4.7.2.1 Description of Pollutant Sources

Industrial material handling activities can generate considerable amounts of dust that is typically removed using exhaust systems. This can generate air emissions that can contaminate stormwater. Dusts can be generated at cement and concrete product mixing facilities, foundries, and wherever powdered materials are handled. Particulate materials that are of concern to air pollution control agencies include grain dust, sawdust, coal, gravel, crushed rock, cement, and boiler fly ash. The objective of this BMP is to reduce the stormwater pollutants caused by dust generation and control.

4.7.2.2 Pollutant Control Approach

Prevent dust generation and emissions where feasible, regularly clean-up dust that can contaminate stormwater, and convey dust contaminated stormwater to proper treatment.

4.7.2.3 Required BMPs

- Clean building roofs, powder material handling equipment, and vehicles that can be sources of stormwater pollutants as needed to remove accumulated dust and residue.
- Regularly sweep dust accumulation areas that can contaminate stormwater. Sweeping shall be conducted using vacuum filter equipment to minimize dust generation and to ensure optimal dust removal.
- Minimize the amount of water used for dust control to avoid washing pollutants into the storm drainage system.

4.7.2.4 Recommended BMPs

- In manufacturing operations, train employees to handle powders carefully to prevent generation of dust.
- Use dust filtration/collection systems such as bag house filters, cyclone separators, etc. to control vented dust emissions that could contaminate stormwater. It may be necessary to monitor rooftops for possible accumulations of materials and take appropriate measures to prevent this material from entering the storm drainage system. Control of dust at foundries, metal shredders, and material transfer and handling facilities are some examples.
- Use water spray to flush dust accumulations to sanitary sewers where allowed by the City of Auburn or to other appropriate treatment system.
- Use approved dust suppressants such as those listed in Ecology Publication “Techniques for Dust Prevention and Suppression,” #96-433. (Ecology, 2003). Application of some products may not be appropriate in close proximity to receiving waters or conveyances close to receiving waters. For more information check with the Ecology Northwest Regional Office or the City of Auburn.
- For removal of TSS in stormwater, use sedimentation basins, wet ponds, wet vaults, catch basin filters, vegetated filter strips, or equivalent sediment removal BMPs. Refer to Volume V for more information about these BMPs.
- Additional information on dust control can be found in Volume II of this manual.

4.7.3 BMP A603: Soil Erosion and Sediment Control at Industrial Sites

4.7.3.1 Description of Pollutant Sources

Industrial activities on soil areas, exposed and disturbed soils, steep grades, etc. can be sources of sediments that can contaminate stormwater runoff.

4.7.3.2 Pollutant Control Approach

Limit the exposure of erodible soil, stabilize or cover erodible soil where necessary to prevent erosion, and/or provide treatment for stormwater contaminated with TSS caused by eroded soil.

4.7.3.3 Required BMPs

Apply one or more of the following cover practices:

- Vegetative cover such as grass, trees, large bark, bonded fiber matrix, or shrubs on erodible soil areas;
- Covering with mats such as clear plastic, jute, synthetic fiber; or gunite; and/or
- Preservation of natural vegetation including grass, trees, shrubs, and vines.

Control sediment through installing a vegetated swale, dike, silt fence, check dam, gravel filter berm, and/or sedimentation basin and properly grading. For design information refer to Volume II.

4.8 Other Activities

4.8.1 BMP A701: Commercial Animal Handling Areas

4.8.1.1 Description of Pollutant Sources

Racetracks, kennels, fenced pens, veterinarians, and businesses that provide boarding services for horses, dogs, cats, etc. can generate pollutants from activities such as manure deposits, animal washing, grazing, and any other animal handling activity that could contaminate stormwater. Pollutants can include coliform bacteria, nutrients, and total suspended solids.

4.8.1.2 Pollutant Control Approach

To prevent, to the maximum extent practicable, the discharge of contaminated stormwater from animal handling and keeping areas.

4.8.1.3 Required BMPs

- Regularly scoop, sweep and clean animal keeping areas to collect and properly dispose of droppings, uneaten food, and other potential stormwater contaminants.
- Do not hose down to storm drains or receiving waters those areas that contain potential stormwater contaminants.
- Contaminated water must go to the sanitary sewer. A hair and sediment trap may be required.
- Do not allow any wash water to be discharged to storm drains or to receiving water without proper treatment.
- If animals are kept in unpaved and uncovered areas, the ground must either have vegetative cover or some other type of ground cover, such as mulch.
- If animals are not leashed or in cages, the area where animals are kept must be surrounded by a fence or other devices to prevent animals from moving away from the controlled area where BMPs are used.

4.8.2 BMP A702: Log Sorting and Handling

4.8.2.1 Description of Pollutant Sources

Log yards are paved or unpaved areas where logs are transferred, sorted, debarked, cut, and stored to prepare them for shipment or for the production of dimensional lumber, plywood, chips, poles, or other products. Log yards are generally maintained at sawmills, shipping ports, and pulp mills. Typical pollutants include oil and grease, BOD, settleable solids, total suspended solids (including soil), high and low pH, heavy metals, pesticides, wood-based debris, and leachate.

The following are pollutant sources:

- Log storage, rollout, sorting, scaling, and cutting areas
- Log and liquid loading areas
- Log sprinkling
- Debarking, bark bin, and conveyor areas
- Bark, ash, sawdust and wood debris piles, and other solid wastes
- Metal salvage areas
- Truck, rail, ship, stacker, and loader access areas
- Log trucks, stackers, loaders, forklifts, and other heavy equipment
- Maintenance shops and parking areas
- Cleaning areas for vehicles, parts, and equipment
- Storage and handling areas for hydraulic oils, lubricants, fuels, paints, liquid wastes, and other liquid materials
- Pesticide usage for log preservation and surface protection
- Application of herbicides for weed control
- Contaminated soil resulting from leaks or spills of fluids

4.8.2.2 Ecology's Baseline General Permit Requirements

Industries with log yards are required to obtain coverage under the baseline General Permit for Discharges of Stormwater Associated with Industrial Activities to Surface Water. The permit requires preparation and on-site retention of Stormwater Pollution Prevention Plans (SWPPP). The SWPPP must identify operational, source control, erosion and sediment control, and, if necessary, treatment BMPs. Required and recommended operational, source control, and treatment BMPs are presented in detail in Ecology's Guidance Document: Industrial Stormwater General Permit Implementation Manual for Log Yards, Publication # 04-10-031. It is recommended that all log yard facilities obtain a copy of this document.

4.8.3 BMP A703: Boat Building, Maintenance and Repair

4.8.3.1 Description of Pollutant Sources

Sources of pollutants at boat and ship building, repair, and maintenance facilities include pressure washing, surface preparation, paint removal, sanding, painting, engine maintenance and repairs, and material handling and storage, if conducted outdoors. Potential pollutants include spent abrasive grits, solvents, oils, ethylene glycol, wash water, paint over-spray, cleaners/detergents, anti-corrosive compounds, paint chips, scrap metal, welding rods, resins, glass fibers, dust, and miscellaneous trash. Pollutant constituents include TSS, oil and grease, organics, copper, lead, tin, and zinc. Related activities are covered under the following activity headings in this manual, and other BMPs provided in this manual:

- A103 Washing, Pressure Washing, and Steam Cleaning of Vehicles/Equipment/Building Structures
- A202 Fueling at Dedicated Stations
- A714 Spills of Oil and Hazardous Substances

4.8.3.2 Pollutant Control Approach

Apply good housekeeping, preventive maintenance, and cover and containment BMPs in and around work areas.

4.8.3.3 Required BMPs

The following BMPs or equivalent measures are required of all businesses, public agencies, and private boat owners engaged in boat building, mooring, maintenance and repair that are not covered by the NPDES permit for boatyards:

- Maintenance and repair activities that can be moved on-shore must be moved accordingly. This action reduces some of the potential for direct pollution impact on waterbodies.
- Blasting and spray painting activities must be sheltered by hanging tarps to block the wind and prevent dust and overspray from escaping. Move the activity indoors if possible. See Chapter 5 for details on Puget Sound Clean Air Agency limitations.
- Bermed ground cloths must be used for collection of drips and spills in painting and finishing operations, and paint chips and used blasting sand from sand blasting.
- Collect spent abrasives regularly and store under cover to await proper disposal.
- Dispose of greasy rags, oil filters, air filters, batteries, spent coolant, and degreasers properly.
- Drain oil filters before disposal or recycling.

- Bilge water must be collected for proper disposal rather than discharged on land or water. See BMP S102 for detail on disposal options. Discharge of contaminated bilge water may be avoided if oil-absorbent pads are used to capture the oil in the bilge water before or during pumping. If pads are used, they must be recycled or properly disposed.
- Convey sanitary sewage to pump-out stations, portable on-site pump-outs or other appropriate onshore facilities.
- Maintenance yard areas must be swept and cleaned, without hosing down the area, at least once per week or as needed. This prevents sandblasting materials, scrapings, paint chips, oils, and other loose debris from being carried away with stormwater. The collected materials must be disposed of properly. See BMP S102 for disposal options.
- Docks and boat ramps must be swept at least once per week or as needed and the collected materials must be disposed of properly.
- Paint and solvent mixing, fuel mixing and similar handling of liquids shall be performed on shore, or such that no spillage can occur directly into surface waterbodies.
- Routine cleanup materials such as oil-absorbent pads, brooms, dustpans, mops, buckets, and sponges must be stocked near docks.
- Comply with BMP A203 and A101 if engine repair and maintenance are conducted.
- In the event of an accidental discharge of oil or hazardous material into waters of the state or onto land with a potential for entry into state waters, immediately notify the Department of Ecology, and the National Response Center at 1-800-424-8802 (24 hour).

4.8.3.4 Recommended BMPs

The following BMPs are not required but can provide additional pollution protection:

- Boat construction and structural repair activities should be covered.
- Materials such as paints, tools, and ground cloths should be stored indoors or in a covered area when not in use.
- Select the least toxic anti-fouling paint available.
- Use sanders that have dust containment bags and avoid sanding in windy conditions.
- All used oil should be recycled if feasible. To dispose of filters, let drain 24 hours, then double wrap in plastic and dispose in the regular garbage. Pending state legislation may make disposal in the garbage illegal, so call the Hazardous Waste Line at 1-800-287-6429 for current information.

- Use one of the following treatment BMPs when paint chips or blasting grit are prevalent in the work area
  - Catch basin filter insert
  - Infiltration basin
  - Wet pond or vault
  - Constructed wetland
  - Vegetated biofilter
  - Filtration with media designed for the pollutants that are present
  - Equivalent BMP (see Volume V)

4.8.4 BMP A704: Logging

4.8.4.1 Description of Pollutant Sources

This activity covers logging activities that fall under the Washington State Forest Practices Act category of Class IV general forest practices. These are situations where timber harvesting is done in the process of converting forest lands into other land uses, such as home and business construction. Stormwater runoff from bare ground can be loaded with dirt and other pollutants. This material can clog ditches and stream channels, thus reducing carrying capacity and increasing flooding, as well as smothering spawning beds for fish. Simply controlling runoff and not allowing it to leave the site will prevent these harmful effects. Clearing and grading activities are covered in detail in Volume II of this manual, Construction Stormwater Pollution Prevention. Grading activities are also regulated in the City of Auburn by the Land Clearing, Filling and Grading Code, Chapter 15.74 ACC.

Control of stormwater run-on and soil stabilization is critical. Limiting the area to be cleared and graded during wet weather seasons will make site stabilization and sediment control easier.

Coverage under Ecology's Construction Stormwater General Permit is required for construction sites that result in the disturbance of one acre or more of land. Compliance with the Construction Stormwater Pollution Prevention requirements in Ecology's manual is required, as applicable. Virtually all logging operations will require a permit from the Washington State Department of Natural Resources. Sensitive/critical areas and wetlands ordinances for Auburn also contain requirements for logging activities in the vicinity of water bodies.

Pollutants of concern include suspended solids, oils and greases, biochemical oxygen demand (BOD), nutrients, toxic organic compounds, and heavy metals.

4.8.4.2 Pollutant Control Approach

Maintain required buffers adjacent to critical areas, including streams and wetlands. Keep sediments out of waterbodies and off paved areas.

4.8.4.3 Required BMPs

- Vegetation along stream corridors, and adjacent to other waterbodies and wetlands, must be preserved. Maintenance of a vegetated buffer enables filtration of most of the pollutants of concern for this activity. The above-mentioned ordinances contain specific requirements for buffer setbacks.
- Logging access roads must have a crushed rock or spall apron construction entrance where they join the pavement to prevent sediments from being tracked onto the pavement.
- On-site fueling and maintenance operations must follow the required BMPs as outlined in A204 Mobile Fueling; A203 Vehicle Maintenance; and A407 Storage of Liquid, Food Waste, or Dangerous Waste Containers.

4.8.4.4 Recommended BMPs

The following BMPs are not required, but can provide additional pollution protection:

- Erosion potential can be reduced by avoiding logging on steep slopes.
- If access roads are constructed for logging, they should be provided with drainage ditches that divert runoff into vegetated areas or stormwater treatment systems.
- Plant vegetated buffers in areas where they are already downslope of proposed logging areas, with sufficient lead time to allow for effective growth.

4.8.5 BMP A705: Mining and Quarrying of Sand, Gravel, Rock, Peat, Clay and Other Materials

4.8.5.1 Description of Pollutant Sources

This activity applies to surface excavation and on-site storage of sand, gravel, and other materials that are mined. All mining operations that have stormwater runoff from the site are required to apply for a National Pollutant Discharge Elimination System (NPDES) permit with the Department of Ecology. Ecology has specific BMPs required by the permit. Some additional BMPs to help meet Ecology's discharge performance standards are listed below. Other permits from the Washington Department of Natural Resources and the City of Auburn may be required.

Pollutants of concern are suspended solids, nutrients, pH, oils, and metals.

Pollutant Control Approach: Provide containment and or cover for any on-site storage areas to prevent run-on and discharge of suspended solids and other pollutants.

4.8.5.2 Recommended BMPs

- If the material is appropriate, use excavated spoil material to form compacted berms along downslope sides of the site to contain runoff. Berms should be seeded to promote growth of grass or other vegetation to limit erosion from the berms. Safety measures to prevent flooding due to berm failure shall be considered.
- Measures to control track-out and dust should be implemented. Wheel washes, sweeping, and paving high traffic areas are some common practices.
- Semi-permanent stockpiles should be seeded to promote vegetation growth which can help to limit erosion from the stockpiles.
- Use sediment ponds to promote settling of suspended solids. Refer to Volume V of this manual for more information.
- Use anchored tarps to cover stockpiles at small-scale mining operations if there is a potential for contaminated stormwater to leave the site.

4.8.6 BMP A706: Swimming Pool and Spa Cleaning and Maintenance

4.8.6.1 Description of Pollutant Sources

This activity applies to all municipal and commercial swimming pools and spas. Pools and spas at hotels, motels, and apartment and condominium complexes are covered here. Pools at single-family residences are covered in Chapter 3 of this volume. Commercial pool and spa cleaning services must follow the required BMPs for all pools serviced.

Pollutants of concern include nutrients, suspended solids, chlorine, pH, and chemical oxygen demand (COD).

4.8.6.2 Pollutant Control Approach

Dispose of pool or spa water to the sanitary sewer.

4.8.6.3 Required BMPs

- The preferred method of pool or spa water disposal is to the sanitary sewer. If a sanitary sewer is available, all Health Department regulated facilities are required to connect for draining and backwash. Contact the City of Auburn Sanitary Sewer Utility at 253-931-3010 prior to discharge for instructions on allowable flow rates and timing before starting to drain the pool. Never discharge pool water to a septic system, as it may cause the system to fail.
- If discharge to the sanitary sewer is not possible, pool and spa water may be discharged to a ditch or storm drainage system, provided that the water has been dechlorinated first. The proponent is required to contact the City of Auburn Storm Drainage Utility at 253-931-3010 prior to discharge for instructions on allowable flow rates for the system or ditch that is being discharged to. All discharges shall be de-chlorinated to a concentration of 0.1 parts per million (ppm or mg/L) or less, and pH adjusted 6.5 to 8.5 standard units, if necessary. Neutralizing chemicals are available for dechlorinating water and adjusting the pH. Turbidity shall not exceed 10 NTU. Letting the pool or spa "sit" may also reduce chlorine levels. Use a test kit to determine if the chlorine concentration has reached zero and the pH is within acceptable limits.
- State law allows discharges of pool water to the ground, not to a water body or storm drainage system, with a chlorine level of up to 3 parts per million. However, the water must not cross property lines or impact neighboring properties, and a satisfactory means for distributing the water to the ground must be used so there is no runoff.
- Backwash from pool filters cannot be discharged to surface waters, storm drainage systems, septic systems, or on the ground.
- Diatomaceous earth used in pool filters cannot be discharged to surface waters, storm drainage systems, septic systems, or on the ground.

4.8.6.4 Recommended BMP

- Hire a professional pool-draining service to collect all pool water for offsite disposal.

4.8.7 BMP A707: De-Icing and Anti-Icing Operations for Streets & Highways

4.8.7.1 Description of Pollutant Sources

Deicing and/or anti-icing compounds are used on highways, streets, and sidewalks to control ice and snow. Typically ethylene glycol and propylene glycol are deicers used on aircraft. Deicers commonly used on highways, streets and sidewalks include calcium magnesium acetate (CMA), calcium chloride, magnesium chloride, sodium chloride, urea, and potassium acetate. The deicing and anti-icing compounds become pollutants when they are conveyed to storm drains or to surface water after application. Leaks and spills of these chemicals can also occur during their handling and storage.

4.8.7.2 Required BMPs

- Select de-icers and anti-icers that cause the least adverse environmental impact. Apply only as needed using minimum quantities.
- Where feasible and practicable, use roadway deicers, such as calcium magnesium acetate, potassium acetate, or similar materials that cause less adverse environmental impact than urea and sodium chloride.
- Store and transfer de/anti-icing materials on an impervious containment pad in accordance with BMP A401 Storage or Transfer (Outside) of Solid Raw Materials, By-Products, or Finished Products and A408 Storage of Liquids in Above-Ground Tanks.
- Sweep/clean up accumulated de/anti-icing materials and grit from roads as soon as possible after the road surface clears.

4.8.7.3 Recommended BMPs

- Intensify roadway cleaning in early spring to help remove particulates from road surfaces.
- Include limits on toxic metals in the specifications for de/anti-icers.
- Additional guidance can be found in the Regional Road Maintenance - Endangered Species Act (ESA) program guidelines.
- State guidelines contain additional information for de-icing activities at airports.

4.8.8 BMP A708: Roof and Building Drains at Manufacturing and Commercial Buildings

4.8.8.1 Description of Pollutant Sources

Stormwater runoff from roofs and sides of manufacturing and commercial buildings can be sources of pollutants caused by leaching of roofing materials, building vents, and other air emission sources. Vapors and entrained liquid and solid droplets/particles have been identified as potential pollutants in roof/building runoff. Metals, solvents, acidic/alkaline pH, BOD, and organics are some of the pollutant constituents identified.

4.8.8.2 Pollutant Control Approach

Evaluate the potential sources of stormwater pollutants and apply source control BMPs where feasible. Use dust filtration/collection systems such as bag house filters, cyclone separators, etc. to control vented dust emissions that could contaminate stormwater. It may be necessary to monitor roof tops for possible accumulations of materials and take appropriate measures to prevent this material from entering the storm drainage system. Control of dusts at foundries, metal shredders, and material transfer and handling facilities are some examples.

4.8.8.3 Required BMPs

- Bare galvanized metal shall not be used for materials that convey stormwater, such as roofs, canopies, siding, gutters, downspouts, roof drains, and pipes. Any galvanized materials shall have an inert, non-leachable finish, such as baked enamel, fluorocarbon paint (such as Kynar® or Hylar®), factory-applied epoxy, pure aluminum, or asphalt coating. Acrylic paint, polyester paint, field-applied, and part zinc (such as Galvalume®) coatings are not acceptable.
- If leachates and/or emissions from buildings are suspected sources of stormwater pollutants, then sample and analyze the stormwater draining from the building.
- If a roof/building stormwater pollutant source is identified, implement appropriate source control measures such as air pollution control equipment, selection of materials, operational changes, material recycle, process changes, etc.
- Water quality treatment BMPs are found in Volume V of this manual.

4.8.9 BMP A709: Urban Streets

4.8.9.1 Description of Pollutant Sources

Streets can be sources of vegetative debris, paper, fine dust, vehicle liquids, tire wear residues, heavy metals (lead and zinc), phthalates, soil particles, ice control salts, domestic wastes, animal wastes, lawn chemicals, and vehicle combustion by-products. Street surface contaminants have been found to contain significant concentrations of particle sizes less than 250 microns (Sartor and Boyd, 1972).

4.8.9.2 Pollutant Control Approach

Conduct efficient street sweeping where and when appropriate to minimize the contamination of stormwater. Do not wash street debris into storm drains.

4.8.9.3 Recommended BMPs

- For maximum stormwater pollutant reductions on curbed streets and high volume parking lots, use efficient vacuum sweepers.
- High-efficiency street sweepers utilize strong vacuums and the mechanical action of main and gutter brooms combined with an air filtration system that only returns clean air to the atmosphere (i.e., filters very fine particulates). They sweep dry and use no water since they do not emit any dust.
- For moderate stormwater pollutant reductions on curbed streets, use regenerative air sweepers or tandem sweeping operations.
- A tandem sweeping operation involves a single pass of a mechanical sweeper followed immediately by a single pass of a vacuum sweeper or regenerative air sweeper.
    - A regenerative air sweeper blows air down on the pavement to entrain particles and uses a return vacuum to transport the material to the hopper.
    - These operations usually use water to control dust. This reduces their ability to pick up fine particulates.
- For minimal stormwater pollutant reductions on curbed streets, use mechanical sweepers.

  NOTE: Mechanical sweepers are referred to as broom sweepers and use the mechanical action of main and gutter brooms to throw material on a conveyor belt that transports it to the hopper. These sweepers usually use water to control dust, reducing their ability to pick up fine particulates.

- Conduct sweeping at optimal frequencies. Optimal frequencies are those scheduled sweeping intervals that produce the most cost-effective annual reduction of pollutants normally found in stormwater and can vary depending on land use, traffic volume, and rainfall patterns.

- Train operators in those factors that result in optimal pollutant removal. These factors include sweeper speed, brush adjustment and rotation rate, sweeping pattern, maneuvering around parked vehicles, and interim storage and disposal methods.
- Minimize the amount of water applied for dust control to avoid washing pollutants into the storm drainage system.
- At active construction sites, street sweeping shall be performed prior to washing the street.
- Consider the use of periodic parking restrictions and public notification in residential areas to ensure the sweeper's ability to sweep along the curb.
- Establish procedures for prompt sweeping, removal, and disposal of spill clean-up materials and debris from special events that will generate higher than normal loadings.
- Disposal of street sweeping solids must comply with "Recommendations for Management of Street Wastes" described in Appendix D of this volume. Additional guidance can be found in the Regional Road Maintenance – Endangered Species Act (ESA) program guidelines.
- Inform citizens about the importance of eliminating yard debris, oil, and other wastes in street gutters in order to reduce street pollutant sources.
- When encountering questionable sweeping waste contact the City of Auburn Storm Drainage Maintenance and Operations at 253-931-3048.

4.8.10 BMP A710: Railroad Yards

4.8.10.1 Description of Pollutant Sources

Pollutant sources can include drips/leaks of vehicle fluids and cargo onto the railroad bed; human waste disposal; litter; locomotive/railcar/equipment cleaning; fueling; outside material storage; the erosion and loss of soil particles from the railroad bed; maintenance and repair activities at railroad terminals, switching yards, and maintenance yards; and herbicides used for vegetation management. Waste materials can include waste oil, solvents, degreasers, antifreeze solutions, radiator flush, acids, brake fluids, dust, soiled rags, oil filters, sulfuric acid and battery sludge, machine chips with residual machining oil, and toxic fluids/solids lost during transit. Potential pollutants include oil and grease, TSS, BOD, organics, pesticides, and metals.

4.8.10.2 Pollutant Control Approach

Apply good housekeeping and preventive maintenance practices to control leaks and spills of liquids in railroad yard areas.

4.8.10.3 Required BMPs

- Implement the applicable BMPs in this chapter depending on the pollutant generating activities/sources at a railroad yard facility.
- Do not allow toilets to discharge to outside areas while a train is in transit or at the station. Pump-out facilities shall be used to service train toilets.
- Use drip and track pans at hose/pipe connections during liquid transfer and other leak-prone areas.
- During maintenance do not discard debris or waste liquids along the tracks or in railroad yards.
- Promptly clean up all spilled materials.

<u>In areas subjected to leaks/spills of oils or other chemicals, convey the contaminated stormwater to appropriate treatment</u> such as a sanitary sewer (if approved by the City of Auburn), to a CP or API oil/water separator for floating oils, or other appropriate treatment BMP (as approved by the City of Auburn). See Volume V.

4.8.11 BMP A711: Maintenance of Public and Utility Corridors and Facilities

4.8.11.1 Description of Pollutant Sources

Passageways and equipment at petroleum product, natural gas, and water pipelines and electrical power transmission corridors and rights-of-way can be sources of pollutants, such as herbicides used for vegetation management and eroded soil particles from unpaved access roads. At pump stations, waste materials generated during maintenance activities may be temporarily stored outside. Additional potential pollutant sources include the leaching of preservatives from wood utility poles, PCBs in older transformers, water that is removed from underground transformer vaults, and leaks/spills from petroleum pipelines. The following are potential pollutants: oil and grease, TSS, BOD, organics, PCB, pesticides, and heavy metals.

4.8.11.2 Pollutant Control Approach

Control fertilizer and pesticide applications, soil erosion, and site debris that can contaminate stormwater.

4.8.11.3 Required BMPs

- Implement BMPs included in Chapter 4, BMP A306: Landscaping and Lawn/Vegetation Management.
- When water or sediments are removed from electric transformer vaults, determine whether contaminants might be present before disposing of the water and sediments. This includes inspecting for the presence of oil or sheen, and determining from records or testing if the transformers contain PCBs. If records or tests indicate that the sediment or water are contaminated above applicable levels, manage these media in accordance with applicable federal and state regulations, including the federal PCB rules (40 CFR 761) and the state MTCA cleanup regulations (Chapter 173-340 WAC). Water removed from the vaults can be discharged in accordance with the federal 40 CFR 761.79, and state regulations (Chapter 173-201A WAC and Chapter 173-200 WAC), or via the sanitary sewer if the requirements, including applicable permits, for such a discharge are met. (See also Chapter 5).
- Within utility corridors, consider preparing maintenance procedures and an implementation schedule that provides for vegetative, gravel, or equivalent cover that minimizes bare or thinly vegetated ground surfaces within the corridor to prevent the erosion of soil. Pave high traffic corridors.
- Provide maintenance practices to prevent stormwater from accumulating and draining across and/or onto roadways. Stormwater shall be conveyed through roadside ditches and culverts. The road shall be crowned, out-sloped, water barred, or otherwise left in a condition not conducive to erosion. Appropriately maintaining grassy roadside ditches discharging to surface waters is an effective way of removing some pollutants associated with sediments carried by stormwater.
- Maintain ditches and culverts at an appropriate frequency to ensure that plugging and flooding across the roadbed, with resulting overflow erosion, does not occur.
- Apply the appropriate BMPs from Volume IV for the storage of waste materials that can contaminate stormwater.

4.8.11.4 Recommended BMPs

- When selecting utility poles for a specific location, consideration should be given to the potential environmental effects of the pole or poles during storage, handling, and end-use, as well as its cost, safety, efficacy, and expected life. If a wood product treated with chemical preservatives is used, it should be made in accordance with generally accepted industry standards such as the American Wood Preservers Association Standards. If the pole or poles will be placed in or near an environmentally sensitive area, such as a wetland or a drinking water well, alternative materials or technologies should be considered. These include poles constructed with material(s) other than wood, such as fiberglass composites, metal, or concrete. Other technologies and materials, such as sleeves or caissons for wood poles, may also be considered when they are determined to be practicable and available.
- Ring the base of treated poles with adsorbent material if leaching of preservative may occur. Monitor the adsorbents as needed.
- As soon as practicable, remove all litter from wire cutting/replacing operations, etc.
- Implement temporary erosion and sediment control in areas where clear-cuts are conducted and new roads are constructed.

4.8.12 BMP A712: Maintenance of Roadside Ditches

4.8.12.1 Description of Pollutant Sources

Common road debris including litter, eroded soil, oils, vegetative particles, and heavy metals can be sources of stormwater pollutants.

4.8.12.2 Pollutant Control Approach

Roadside ditches should be maintained to preserve the condition and capacity for which they were originally constructed, and to minimize bare or thinly vegetated ground surfaces. Maintenance practices should provide for erosion and sediment control (Refer to BMP A306 Landscaping and Lawn/Vegetation Management).

4.8.12.3 Required BMPs

- Inspect roadside ditches regularly, as needed, to identify sediment accumulations and localized erosion.
- Clean ditches on a regular basis, as needed. Ditches shall be kept free of rubbish and debris.
- Vegetation in ditches often prevents erosion and cleanses runoff waters. Remove vegetation only when flow is blocked or excess sediments have accumulated. Conduct ditch maintenance (seeding, fertilizer application, harvesting) in late spring and/or early fall, where possible. Consider leaving segments of undisturbed vegetation to provide natural filtration.
- In the area between the edge of the pavement and the bottom of the ditch, commonly known as the “bare earth zone,” use grass vegetation, wherever possible. Vegetation shall be established from the edge of the pavement if possible or at least from the top of the slope of the ditch.
- Diversion ditches on top of cut slopes that are constructed to prevent slope erosion by intercepting surface drainage must be maintained to retain their diversion shape and capability.
- Ditch cleanings are not to be left on the roadway surfaces. Sweep dirt and debris remaining on the pavement at the completion of ditch cleaning operations.
- Roadside ditch cleanings not contaminated by spills or other releases and not associated with a stormwater treatment system such as a bioswale may be screened to remove litter and separated into soil and vegetative matter (leaves, grass, needles, branches, etc.). The soil fraction may be handled as ‘clean soils’ and the vegetative matter can be composted or disposed of in a municipal waste landfill. For more information, please see “*Recommendations for Management of Street Wastes*,” in Appendix D of this volume.
- Roadside ditch cleanings contaminated by spills or other releases known or suspected to contain dangerous waste must be handled following the Dangerous Waste Regulations (Chapter 173-303 WAC) unless testing determines it is not dangerous waste. Specific cleanup standards are set forth in the Model Toxics Control Act (Chapter 70.105D RCW) and Regulations (Chapter 173-340 WAC).

- Inspect culverts on a regular basis for scour or sedimentation at the inlet and outlet, and repair as necessary. Give priority to those culverts conveying perennial and/or salmon-bearing streams and culverts near streams in areas of high sediment load, such as those near subdivisions during construction.

4.8.12.4 Recommended BMPs

- Install biofiltration swales and filter strips to treat roadside runoff wherever practicable and use engineered topsoils wherever necessary to maintain adequate vegetation. These systems can improve infiltration and stormwater pollutant control upstream of roadside ditches. Refer to Volume V of this manual for additional information about biofiltration swales and filter strips.
- Additional guidance can be found in the Regional Road Maintenance - Endangered Species Act (ESA) program guidelines.

4.8.13 BMP A713: Maintenance of Stormwater Drainage and Treatment Facilities

4.8.13.1 Description of Pollutant Sources

Facilities include roadside catch basins on arterials and within residential areas, conveyance systems, detention facilities such as ponds and vaults, oil and water separators, biofilters, settling basins, infiltration systems, and all other types of stormwater treatment systems presented in Volume V. Roadside catch basins can remove from 5 to 15 percent of the pollutants present in stormwater. When catch basins are about 60 percent full of sediment, they cease removing sediments. Oil and grease, hydrocarbons, debris, heavy metals, sediments, and contaminated water are found in catch basins, oil and water separators, settling basins, etc.

4.8.13.2 Pollutant Control Approach

Provide maintenance and cleaning of debris, sediments, and oil from stormwater collection, conveyance, and treatment systems to obtain proper operation.

4.8.13.3 Required BMPs

Maintain stormwater treatment facilities according to the O&M procedures presented in Volume I, Appendix D, in addition to the following BMPs:

- Inspect and clean treatment BMPs, conveyance systems, and catch basins as needed, and determine whether improvements in O&M are needed.
- Promptly repair any deterioration threatening the structural integrity of the facilities. These include replacement of clean-out gates, catch basin lids, and rock in emergency spillways.
- Ensure that storm sewer capacities are not exceeded and that heavy sediment discharges to the sewer system are prevented.
- Regularly remove debris and solids from BMPs used for peak-rate control, treatment, etc. and discharge to a sanitary sewer if approved by the City of Auburn, or truck to a local or state government approved disposal site.
- Clean catch basins in accordance with the information provided in Volume I, Appendix D. Additional information is also included in BMP S109: Cleaning Catch Basins.
- Clean debris in a catch basin as frequently as needed to ensure proper operation of the catch basin.
- Post warning signs or curb markers; “Dump No Waste - Drains to Groundwater,” “Streams,” “Lakes,” or emboss on or adjacent to all storm drain inlets where practical.
- Disposal of sediments and liquids from the catch basins must comply with “Recommendations for Management of Street Wastes” described in Appendix D of this volume.

- Select additional applicable BMPs from Chapter 4 of this volume depending on the pollutant sources and activities conducted at the facility. Those BMPs include:
  - A407 Storage of Liquid, Food Waste, or Dangerous Waste Containers.
  - A603 Soil Erosion and Sediment Control at Industrial Sites
  - A709 Urban Streets
  - A714 Spills of Oil and Hazardous Substances
  - S101 Eliminate Illicit Storm Drainage System Connections

4.8.14 BMP A714: Spills of Oil and Hazardous Substances

4.8.14.1 Description of Pollutant Sources

Owners or operators of facilities engaged in drilling, producing, handling, gathering, storing, processing, transferring, distributing, refining or consuming oil and/or oil products are required by Federal Law to have a Spill Prevention and Control Plan. The federal definition of oil is oil of any kind or any form, including, but not limited to, petroleum, fuel oil, sludge, oil refuse, and oil mixed with wastes other than dredged spoil. Specific regulations can be found in 40 CFR Part 112, as amended December, 2006. These regulations are administered by the Environmental Protection Agency and the United States Coast Guard. Large petroleum handling facilities and vessels are also subject to regulations contained in Chapter 90.56 RCW and Chapter 173-180A WAC.

Owners of businesses that produce Dangerous Wastes are also required by State Law, Chapter 70.105 RCW and Chapter 173-303 WAC, to have a spill control plan. These businesses should refer to Chapter 5 of this volume. The City of Auburn may also require a spill plan to protect the municipal sewer system and groundwater resources. Plans required by the above listed regulations may suffice.

4.8.14.2 Pollutant Control Approach

Maintain, update, and implement an oil spill prevention/cleanup plan.

4.8.14.3 Required BMPs

- Prepare an Emergency Spill Control Plan (SCP), which includes:
  - A description of the facility including the owner's name and address.
  - The nature of the activity at the facility.
  - The general types of chemicals used or stored at the facility.
  - A site plan showing the location of storage areas for chemicals, the locations of storm and sanitary drains, the areas draining to them, the ultimate point of discharge, and the location and description of any devices to stop spills from leaving the site such as positive control valves;
  - Cleanup procedures and supplies.
  - Notification procedures to be used in the event of a spill, such as notifying key personnel. Agencies such as Ecology, Valley Regional Fire Authority, Washington State Patrol, City of Auburn, and the U.S. Environmental Protection Agency shall be notified.
  - The name and 24-hour contact telephone number of the designated person, and their alternate with overall spill cleanup and notification responsibility.
  - Identify contractors that can be contacted to provide spill clean-up and disposal services. A service agreement is encouraged.

- Train key personnel in the implementation of the Emergency SCP. Prepare a summary of the plan and post it at appropriate points in the building, identifying the spill cleanup coordinators, location of cleanup kits, and 24-hour phone numbers of regulatory agencies to be contacted in the event of a spill.
- Update the SCP regularly.
- Immediately notify Ecology and the City of Auburn if a spill may reach sanitary or storm sewers, groundwater, or surface water, in accordance with federal and Ecology spill reporting requirements.
- Immediately clean up spills using appropriate personal protection equipment and following the facility safety standards. Do not use emulsifiers for cleanup unless an appropriate disposal method for the resulting oily wastewater is implemented. Absorbent material shall not be washed down a floor drain or storm sewer.
- Locate emergency spill containment and cleanup kit(s) in high potential spill areas. The contents of the kit shall be appropriate for the type and quantities of chemical liquids stored at the facility.

4.8.14.4 Recommended BMPs

- Spill kits should include appropriately lined drums, absorbent pads, and granular or powdered materials for neutralizing acids or alkaline liquids where applicable. In fueling areas: absorbent should be packaged in small bags for easy use and small drums should be available for storage of absorbent and/or used absorbent. Spill kits should be deployed in a manner that allows rapid access and use by employees.
- Example spill plans may be obtained from the Washington State Department of Transportation and the Environmental Protection Agency.

4.8.15 BMP A715: Water Reservoir, Transmission Mainline, Wellhead, and Hydrant Flushing Activities

4.8.15.1 Description of Pollutant Sources

Construction and operation of drinking water infrastructure, as well as emergency response activities, can generate sediments, rust, turbidity and suspended solids, bacteria, and chlorinated water. Flushing of the water delivery system is necessary to maintain drinking water quality and ensure public health. Flushing activities can result in increased flows in downstream conveyances. These high flows may cause flooding and create erosion in downstream channels.

4.8.15.2 Pollutant Control Approach

Establish operational controls for flow rate and volume of discharges, removal of sediments, neutralization of chlorine, and maximizing the beneficial use of the resource.

4.8.15.3 Required BMPs

- Discharges of untreated hyperchlorinate water must go to the sanitary sewer. Prior City approval is required.
- Alternatively, non-emergency discharges of de-chlorinated potable water may go to the storm drainage system at prior approved flow rates provided the following limits are met:
  - Chlorine residual 0.1 ppm
  - pH 6.5 – 8.5
- Evaluation of the receiving conveyance system for capacity and/or obstructions may be required.
- City approval may be required for draining and flushing reservoirs, standpipes, wellheads, and transmission lines. Notification, monitoring, reporting, flow control measures, and other special conditions may apply. Contact the City of Auburn Public Works Department at 253-931-3010 for the requirements.
- For routine hydrant and water main flushing, coordinate with the City of Auburn Storm Maintenance and Operations section at 253-931-3048. In all cases, the receiving storm pipe shall be monitored for the duration of the discharge to maintain half the full-pipe flow rate.

4.8.15.4 Recommended BMPs

- During emergency repairs and activities, such as mainline breaks, erosion control measures shall be taken as practicable. Use of sandbags, check dams, plastic sheeting, pumps, and other erosion control measures should be employed to minimize erosion as much as possible.
- Excavation de-watering should be managed to minimize downstream environmental impacts. Use of vactor trucks, diverting flow to grassy areas, filter bags, and retention ponds should be employed.

- Significant releases of water can have a detrimental effect on the storm and sanitary transmission system as well as receiving waters. Notification of these releases must be promptly made to the City by calling 253-931-3048.

Figure IV-4-18. Hydrant Flushing

4.8.16 BMP S101: Eliminate Illicit Storm Drainage System Connections

A common problem found in storm drainage systems is illegal hook-ups to the system. Conversely, discharging clean, uncontaminated water to the sanitary sewer system is also prohibited.

All businesses and residences in Auburn shall examine their plumbing systems to determine if illicit connections exist. Any time it is found that toilets, sinks, appliances, showers and bathtubs, floor drains, industrial process waters, cooling towers, or other indoor activities are connected to the storm drainage system, the connections must be immediately rerouted to the sanitary or septic system, holding tanks, or process treatment system. Exceptions to this requirement would be those industries and businesses that have been issued an NPDES Permit by Ecology, and are allowed specific discharges under that permit. Please refer to Chapter 5 to determine if a specific type of business is required to have a NPDES permit.

Dye testing with a non-toxic dye, smoke testing, electronic locators, and television inspection equipment can help to determine where a pipe or structure drains if it is not obvious by observations or on plans. Contact the City of Auburn Public Works Department at 253-931-3010 for assistance in locating City structures adjacent to a property.

Drains which are found to be connected to the wrong system must either be permanently plugged or disconnected and rerouted as soon as possible. Permits must be obtained from The City of Auburn (253-931-3090) to reroute drains. If the discharge is contaminated and sanitary service is not available, alternate measures will be necessary. If the discharge is simply domestic waste, a septic system may be feasible. Contact the appropriate County Health Department for a septic system permit. If the discharge is anything other than domestic, then a holding tank or on-site treatment may be necessary. Contact the City of Auburn Storm Drainage Utility at 253-931-3010 for assistance.

4.8.17 BMP S102: Dispose of Contaminated Stormwater and Waste Materials Properly

Every business and residence in Auburn must dispose of solid and liquid wastes and contaminated stormwater properly. There are generally four options for disposal depending on the type of materials. These options include:

- Sanitary sewer and septic systems
- Recycling facilities
- Municipal or private, permitted solid waste disposal facilities
- Permitted hazardous waste treatment, storage, and disposal facilities

Many liquid wastes and contaminated stormwater (depending on the pollutants and associated concentrations present) can be put into the sanitary sewer. Animal wastes can also be disposed of in a sanitary sewer. A permit may be required for discharges to the sanitary sewer system. Please contact the Auburn Utilities Section at 253-931-3010 for design and permit requirements.

If wastes cannot be legally discharged to a sanitary sewer or septic system, one of the other three disposal options must be used. Recycling facilities are a recommended option for many commercial and household items, including used oils, used batteries, old equipment, glass, some plastics, metal scrap materials, solvents, paints, wood and land clearing wastes, and various other solid wastes.

Solid wastes that cannot be recycled and that are not hazardous must be disposed of at a licensed municipal solid waste disposal facility. Dangerous and hazardous wastes must be properly transported to an appropriate hazardous waste treatment, storage, and disposal facility. The City of Auburn Solid Waste Utility at 253-931-3047 can provide information on waste disposal options.

Maintain records for all materials that are recycled or disposed.

Appendix A of this volume has a list of telephone numbers to contact for assistance.

4.8.18 BMP S103: Discharge Process Wastewater to a Sanitary Sewer, Holding Tank, or Water Treatment System

This BMP is a minimum requirement for all industrial and commercial activities that generate contaminated process wastewater, such as washing activities, composting activities, and production and processing activities. The water used in these activities shall not drain to surface waters or groundwater untreated. Process water must drain to a sanitary sewer, holding tank, on-site treatment system, wastewater treatment system, or be recycled.

In order to connect to the sanitary sewer, contact Auburn Permit Center at 253-931-3090 for information on sanitary sewer connection permits. Call the City of Auburn Sanitary Sewer Utility at 253-931-3010 for pretreatment and permit information.

If a sanitary sewer is not available, the only remaining options are holding tanks or an on-site wastewater treatment facility.

The contents of the holding tank must be pumped out or drained before the tank is full and disposed of properly (see BMP S102).

If the on-site wastewater treatment facility option is taken, then it must be designed to receive and effectively treat all discharges of process water from the business. The Washington State Department of Ecology must be contacted for approval of such a facility.

If the activity is to remain uncovered, then define a designated area for the activity and provide a mechanism for prevention of stormwater run-on into the activity area. (e.g. a curb, dike, or berm).The designated area shall be paved and sloped to a central collection drain and be connected to the sanitary sewer, (with pretreatment if required), the on-site holding tank, or the on-site treatment facility, whichever method is selected.

Monitoring and maintaining all collection systems and keeping records of inspections and maintenance may be required.

4.8.19 BMP S108: Implement Integrated Pest Management Measures

Use of herbicides, fungicides, and rodenticides should always be done with extreme caution, not only because of the potential harm to humans and pets, but also because of the potential harm to fish, wildlife, and our water resources. In light of the toxic nature of these compounds, special attention should be given to pesticide usage in all applications. The discussion below applies more to large-scale licensed pesticide users, but should be considered for backyard applications as well.

Commercial, agricultural, municipal, and other large scale pesticide users, such as golf courses and parks, should adhere to the principles of integrated pest management (IPM), a decision-making process for pest management that strives for intelligent, environmentally sound control of pests. It is a systems approach to pest management that combines agronomic, biological, chemical, and genetic information for educated decisions on the type of control to use, the timing and extent of chemical application, and whether non-chemical means can attain an acceptable level of pest control.

IPM is a preventive measure aimed at knowing the exact pests being targeted for control, the locations and times when pests will pose problems, the level of pest-induced damage that can be tolerated without taking action, the most vulnerable life stage, and control actions that are least damaging to the environment. The major components of IPM are as follows:

- Monitoring and inventory of pest populations
- Determination of pest-induced injury and action levels
- Identification of priority pest problems
- Selection and timing of least toxic management tools
- Site-specific treatment with minimized chemical use
- Evaluation and adjustment of pesticide applications

Monitoring of pest populations is a key to successful IPM implementation. Pest problems are universally easier to control if the problem can be discovered early. With IPM, pesticides are used only as a last resort. Maximization of natural controls, including biological controls and removal of pests by hand, is always the first choice.

Additional concerns are storage, equipment clean-up, spill protocols, and waste disposal.

More information on IPM is available from the Washington State Department of Agriculture and from the Washington State University Extension Service, or in Appendix C of this volume.

4.8.20 BMP S109: Cleaning Catch Basins

Cleaning catch basins regularly is one of the most important stormwater source control measures that a business can take. Catch basins are typically located at low spots in parking lots, along curbs and road edges, and where storm drain pipes combine flows. Catch basins collect surface runoff for storm drains that are typically located directly underneath them. Most catch basins have some storage in the bottom that never drains to an outflow pipe. This permanent storage area is intended to trap sediments, debris, and other particles that can settle out of stormwater, thus preventing clogging of downstream pipes and washing of these solids into receiving waters. All of the solids and stagnant water collected from catch basin sumps must be disposed of properly. The sump contents shall not be flushed into the catch basin outflow pipe.

For additional information on the maintenance of catch basins, refer to Volume I, Appendix D. Perform regular inspections of the basins and their grates. Remove trash and collected sediment when 60% of the sump depth has been filled or sediments are within 6 inches of the bottom of the outlet pipe.

It should be apparent that the use of other BMPs, such as frequent sweeping of activity areas, covering activity areas, reducing activity occurrence, and containing run-off from activity areas will help reduce catch basin cleaning frequency, thus saving time and money. All businesses and agencies should set up maintenance schedules for all of their BMPs so coordinated BMP maintenance efforts results in reduced catch basin cleaning frequencies.

Use of catch basin inserts such as filter socks, absorbent pillows, and filter baskets require an increased inspection frequency to prevent plugging and flooding.

4.9 Cover and Surround Activities

4.9.1 BMP S104: Cover the Activity with a Roof or Awning

In many cases, a simple roof or awning will protect the activity from coming into contact with stormwater, and usually at a lower cost than a complete building. These structures require building permits to construct. Contact the City of Auburn Permit Center at 253-931-3090 to obtain permits.

The area of the roof cover shall be sufficient to prevent any precipitation from reaching the covered materials. Provisions shall be made to prevent stormwater run-on into the covered area. The installation of sumps or sanitary sewer drains may also be necessary. Roof drains shall discharge outside and be directed away from the covered area. Examples of these types of structures are shown in
Figure IV-4-19.

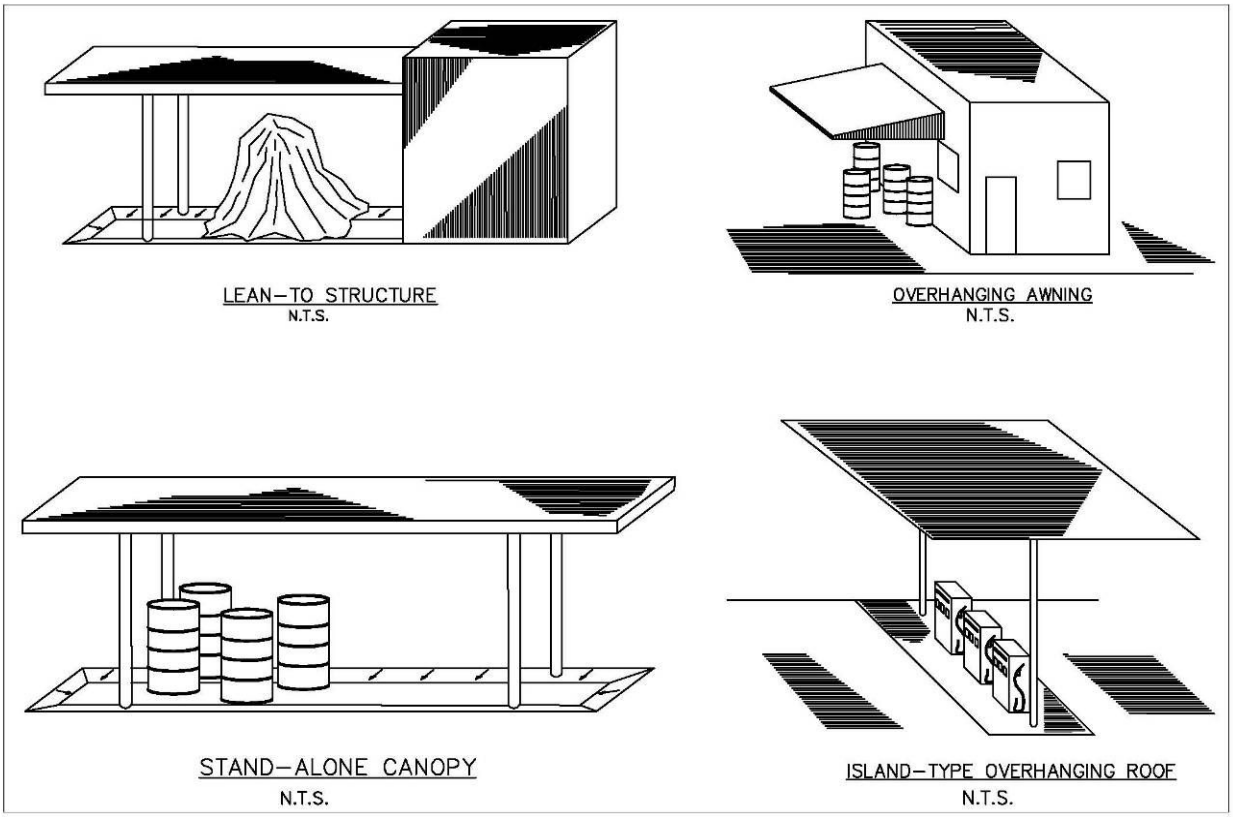

Figure IV-4-19. Examples of Covered Activities

4.9.2 BMP S105: Cover the Activity with an Anchored Tarp or Plastic Sheet

Some activities, such as stockpiling of raw materials, can be effectively covered with a sturdy tarp or heavy plastic sheet made of impermeable material. Weights such as bricks, tires, or sandbags should be used to anchor the cover in place. Run-on shall be prevented from reaching the activity or material. Stormwater run-off from the cover shall be directed away from the stockpile and work zone, and if uncontaminated, directed to the stormwater collection system. The tarp must be inspected daily to ensure that no holes or gaps are present in the tarp coverage. An example of this type of cover is shown in Figure IV-4-20.

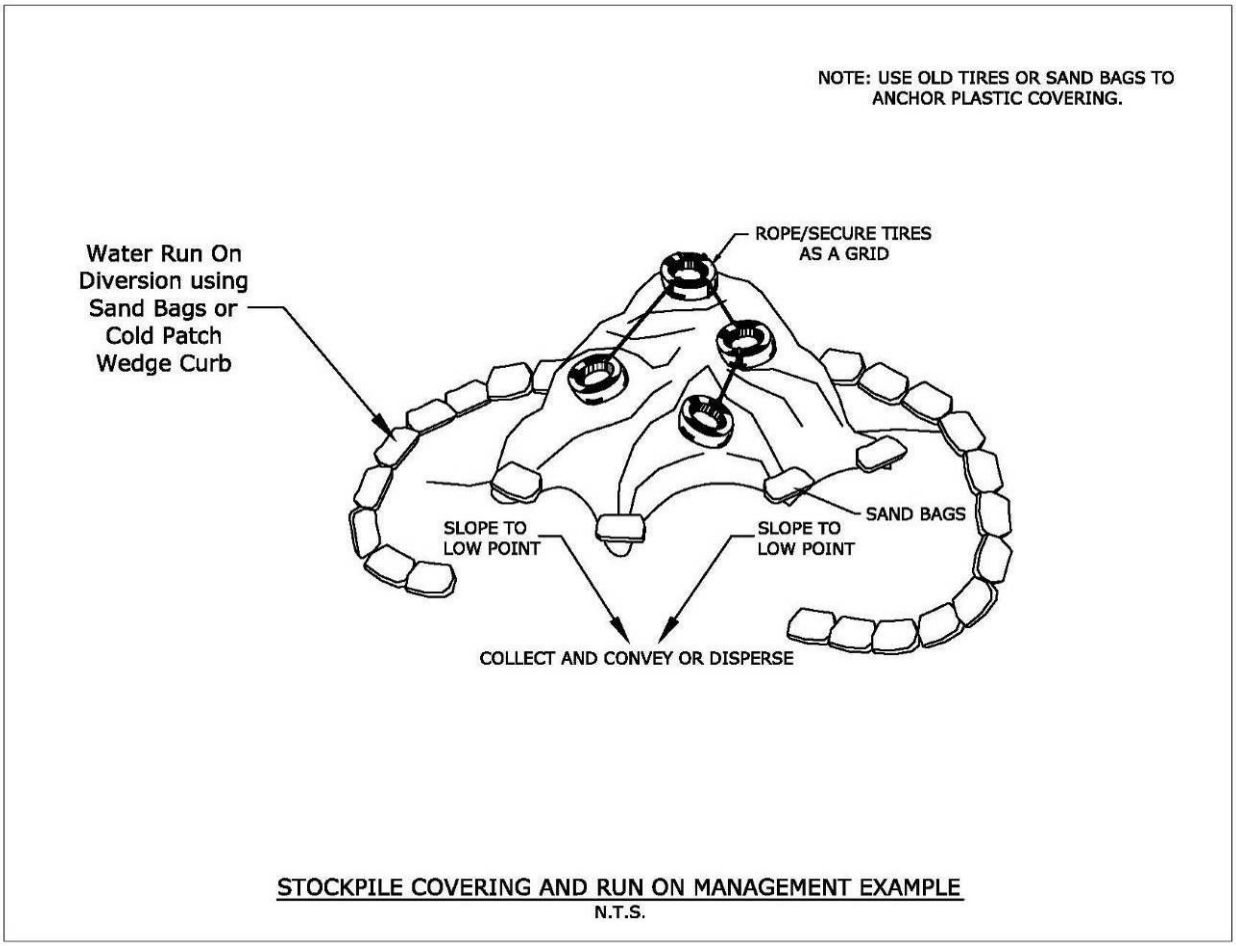

Figure IV-4-20. Tarp Covering

4.9.3 BMP S106: Pave the Activity Area and Slope to a Sump, Holding Tank, or Oil/Water Separator

This BMP applies to several activities that cannot be covered effectively. It is particularly suited to activities with the potential for leaks and spills, but that otherwise do not generate excessive amounts of polluted runoff. The activity area shall be paved and sloped to a central collection point. A sump, holding tank, or oil/water separator (Figure IV-4-21) serves to provide spill containment until the liquids can be pumped out and properly disposed. The minimum volume for the sump shall be equivalent to the volume generated by the anticipated activity plus rain water. Sizing justification shall be included in design submittals.

To prevent run-on, the area should be enclosed with a berm, curb, or dike as shown in Figure IV-4-23. Frequent inspections of the sump, holding tank, or oil/water separator are necessary. Inspections and maintenance shall be recorded in a log. Commercial services that pump sumps and holding tanks are listed in the Yellow Pages of the phone directory under Environmental and Ecological Services.

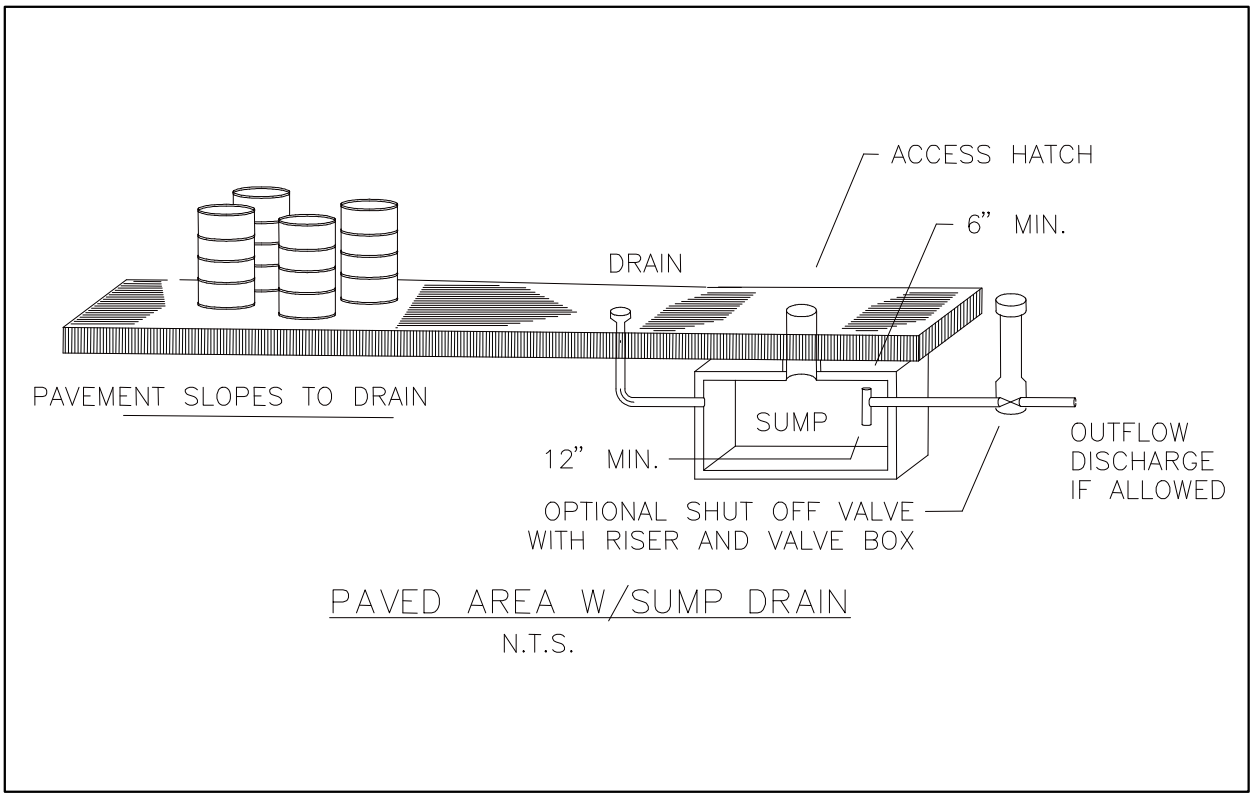

Figure IV-4-21. Paved Area with Sump Drain

4.9.4 BMP S107: Surround the Activity Area with a Curb, Dike, or Berm or Elevate the Activity

This set of BMP options can be an effective means for prevention of stormwater run-on to an activity area. In addition, a curb, berm, or dike can be used for containment of spills in the activity area, or for containment of contaminated activity runoff. Generally, a containment BMP is most applicable to spill control situations; that is, sites where runoff is relatively clean, but occasional spills may occur.

If a curb, berm, or dike is used for runoff containment, and other containment sizing regulations (such as fire codes, Environmental Protection Agency, or Department of Ecology restrictions) do not apply, the containment volume shall be 100% of the volume of the largest tank plus the volume of stormwater runoff from rain events up to the 25-year, 24-hour storm within the containment area is contained or 110% of the volume of the largest tank, whichever is greater.

Impervious containment may consist of membrane lined soil enclosures, containment pallets, plastic pools, mortar mixing tubs, and water troughs.

Regular inspections of the containment area and proper management of any collected stormwater is required.

Development of a spill plan may be necessary for storage of liquids. See BMP A714. For permanent storage facilities see BMP A202, A401, A407, and A408.

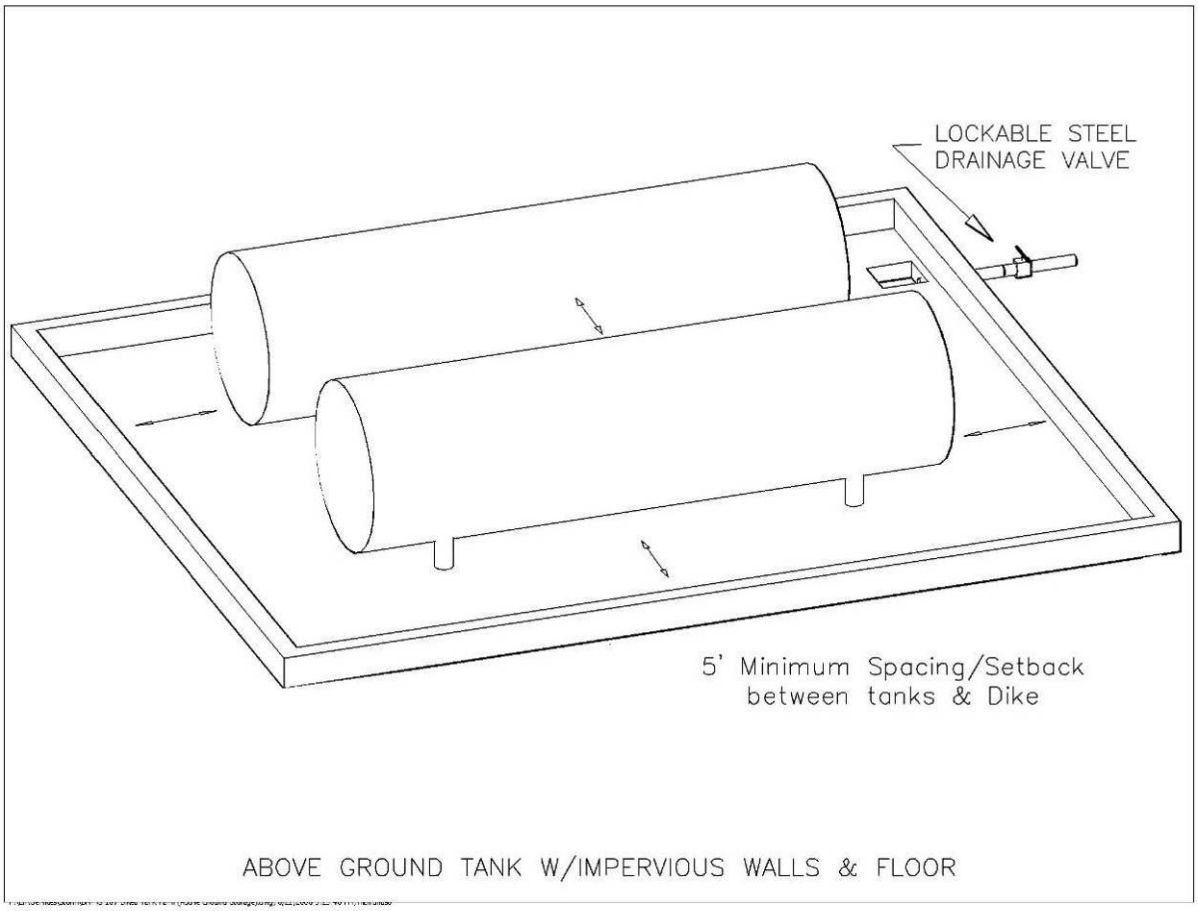

Figure IV-4-22. Above-Ground Tank with Impervious Walls and Floor

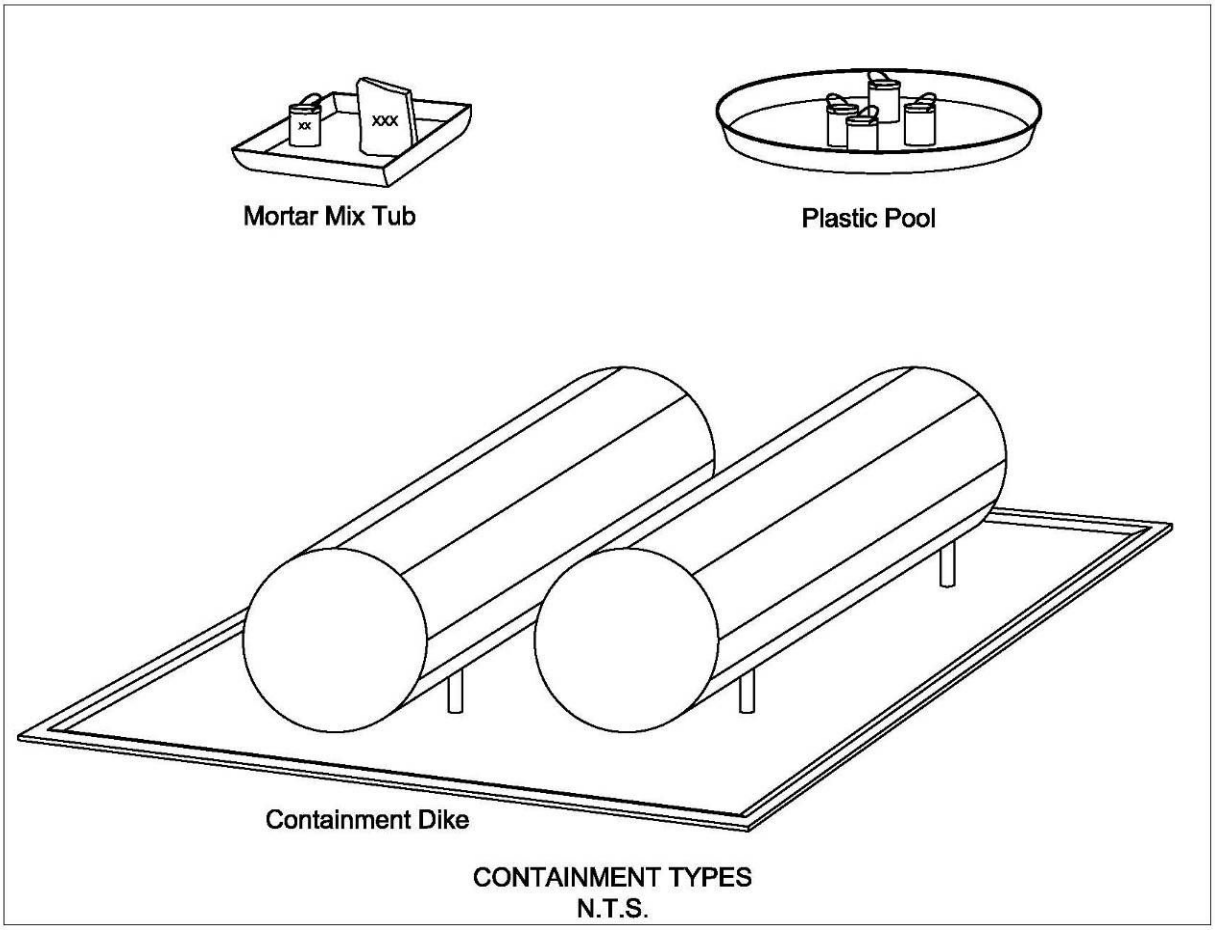

Figure IV-4-23. Containment Types

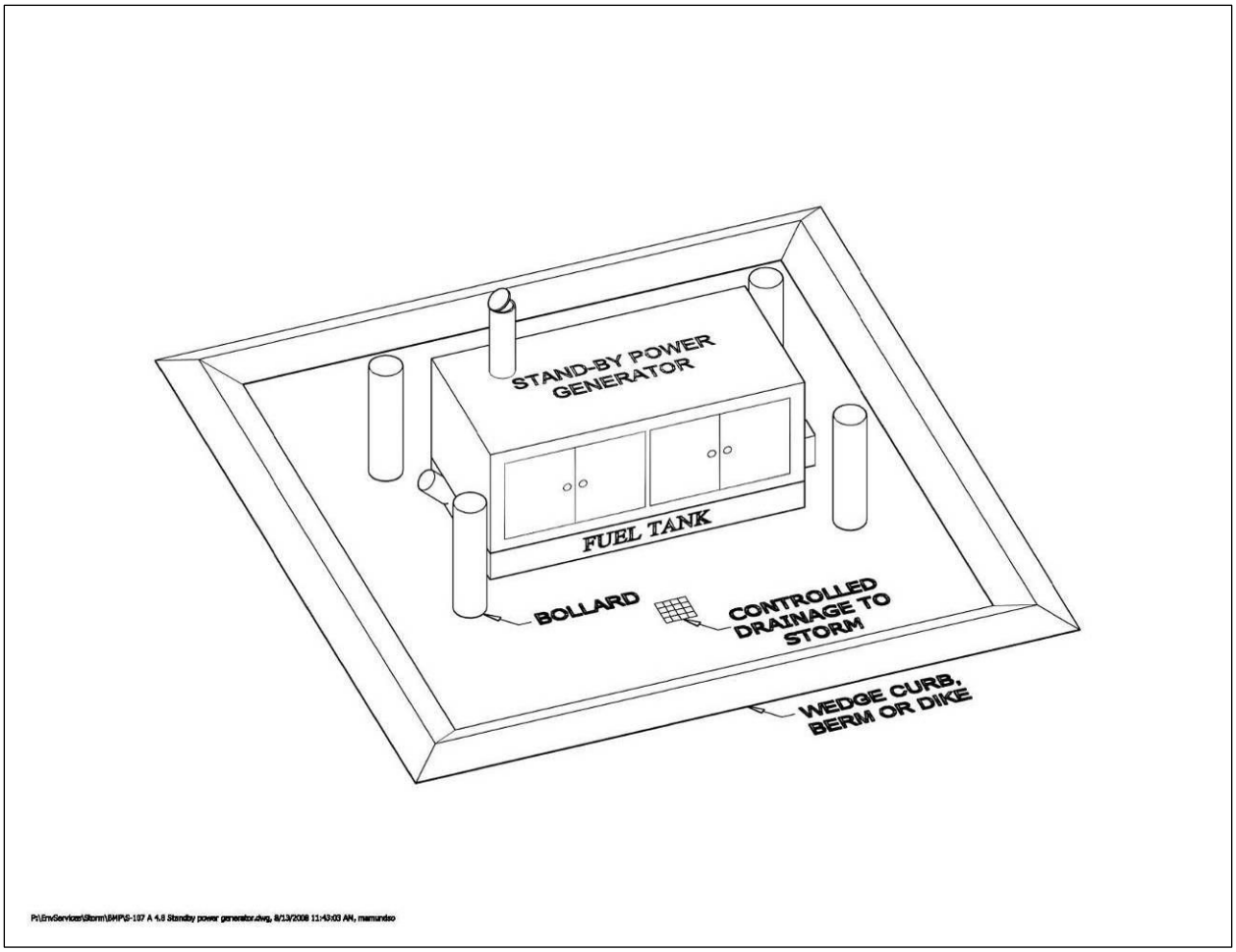

Figure IV-4-24. Standby Generator

Chapter 5 Regulations and Requirements

The information in this chapter is provided to aid in compliance with other Auburn and Washington State regulations, which may apply to a project, industry, or business in terms of protecting water quality. A listing of relevant regulations is provided but should be verified because of the continuing modification of statutes, regulations, and City ordinances. It is the applicant's responsibility to obtain the current version of any ordinances, statutes, or regulations that apply to a specific project or activity. Copies of City ordinances are available at the City Clerk's office in City Hall located at 25 West Main Street, 253-931-3039.

5.1 City of Auburn Codes and Ordinances

The following summarizes Auburn City Code that applies to surface water and pollution control. The complete code may be found online at:

http://www.auburnwa.gov/Home.asp

8.08	Solid Waste
12.20	Driveways
13	Water, Sewer and Public Utilities
13.48	Storm Drainage Utility
13.48.330	Off-site Improvements
14	Project Review
15.74	Land Clearing, Filling and Grading
16	Environment
16.08	Shoreline Regulation
16.10	Critical Areas
17	Subdivision
18	Zoning

5.2 State, Federal, and Other Regulations and Requirements

5.2.1 Washington State Department of Ecology Requirements for the Discharge of Process Wastewaters Directly to Surface Waters

If a public sanitary sewer is not available, process wastewater may be discharged, after suitable treatment, to a surface water body like a lake or stream, or to a drainage field. If the discharge is to a surface water body, Ecology must approve the type and design of the treatment system, as well as the outfall design. If a septic tank and drain field are used for treatment, requirements of the Seattle-King County Health Department (SKCHD) or the Tacoma-Pierce County Health Department (TPCHD) will also apply. Contact SKCHD at 206-296-4932 or TPCHD at 253-798-6470 for more information.

Ecology's requirements can be found at WAC Chapter 173.240.

5.2.2 Washington State Department of Ecology Requirements for Dangerous Waste Generators

The state dangerous waste regulations (WAC Chapter 173-303) cover accumulation, storage, transportation, treatment, and disposal. Of interest to this manual is the temporary accumulation of waste until taken from the site to a permitted disposal site. Only portions of those regulations that apply to temporary storage are summarized here.

Permitted Generators

Businesses that generate 220 pounds or more of waste, either per batch or in the aggregate, over one month must comply with the storage specifications outlined below:

Small-Quantity Waste Generators

These are businesses that generate less than 220 pounds of dangerous waste per month or per batch (or 2.2 pounds of extremely hazardous waste). Small-quantity generators still fall under Ecology regulations to the extent that the materials must be properly stored on site until shipment. The wastes must be moved from the property whenever the accumulated quantity equals or exceeds 220 pounds or whenever the material has resided on site for 180 days. The waste must be disposed of at an approved facility. If the business is in compliance with these requirements, they are also considered solid waste generators, and are regulated by the local health departments. For technical assistance and site visits, contact the Tacoma-Pierce County Health Department at 253-798-6047 or the King County Hazardous Waste Management program at 206-296-4692. Regulations governing small-quantity generators are currently being reviewed to possibly raise the accumulation limit. Call the Hazardous Waste Line at 800-287-6429 for the most up-to-date information.

Dangerous Waste Pollution Prevention Plans

A recent state law established the requirement that generators of dangerous wastes in excess of 220 lbs/month (2,640 lbs/year) prepare a waste reduction plan, called a pollution prevention plan, not to be confused with the stormwater pollution prevention plan (see R.4). The required content of the plan is set forth in *Pollution Prevention Planning - Guidance Manual*, January 1992, Publication #91-2, for WAC Chapter 173-307.

5.2.3 Washington State Department of Ecology Stormwater NPDES Permit Requirements

The Federal National Pollutant Discharge Elimination System (NPDES) program requires industries or industrial-type activities to obtain permits for stormwater discharge.

Coverage under Ecology's general permit for Stormwater Discharges Associated with Industrial Activities is required for each regulated facility. A business must obtain permit coverage if its primary activity falls under one of the categories listed in the permit or its fact sheet. The permit and fact sheet may be viewed on Ecology's website at www.ecy.wa.gov/programs/wq/permits/index.html.

The program requires the preparation of a stormwater pollution prevention plan (SWPPP). A NPDES permit is required for certain categories of industries and municipalities for discharge to surface water, or a storm drain that discharges to surface water or to surface water and groundwater.

5.2.4 Washington State Department of Ecology Requirements for Underground and Above Ground Storage Tanks

Underground storage tanks (UST) that contain fuel and other petroleum products are regulated by the Department of Ecology under **WAC Chapter 173-360 Underground Storage Tank Regulations.** Above-ground storage tanks (ASTs) may also be regulated. Inquiries about business-specific requirements and permitting for USTs and ASTs should be directed to the Department of Ecology, Northwest Regional Office at 425-649-7000.

5.2.5 U.S. Environmental Protection Agency and Ecology Emergency Spill Cleanup Requirements

USEPA - Spill Prevention Control and Cleanup (SPCC) Plans (40 CFR 112)

This federal regulation requires that owners or operators of facilities engaged in drilling, producing, gathering, storing, processing, refining, transferring, or consuming oil and oil products are required to have a spill prevention and control plan (SPCC), provided that the facility is not transportation related; and, that the aboveground storage of a single container is in excess of 660 gallons, or an aggregate capacity greater than 1,320 gallons, or a total below ground capacity in excess of 42,000 gallons.

Department of Ecology Dangerous Wastes (WAC 173-303-350)

The regulations state that generators must have a contingency plan that must include:

1. Actions taken in the event of a spill.
2. Descriptions of arrangements with local agencies.
3. Identification of the owner's emergency coordinator.
4. List of emergency equipment.
5. Evaluation plan for business personnel.

See Federal Regulation 40 CFR 112 and WAC 173-303-350 for further information.

5.2.6 Washington State Department of Agriculture Pesticide Regulations

Washington State pesticide laws are administered by the State's Department of Agriculture, under the Washington Pesticide Control Act (RCW Chapter 15.58), Washington Pesticide Application Action (RCW Chapter 17.21), and regulations in WAC Chapter 16.228. In Auburn, all pest control operators and fumigators are required to obtain certification from the appropriate County Health Department. Contact the Seattle-King County Health Department at 206-205-4394 or Tacoma-Pierce County Health Department’s Compliance Program at 253-798-6440 for more information.

5.2.7 Puget Sound Clean Air Agency Air Quality Regulations

The Puget Sound region is under the jurisdiction of regional air quality authorities who in turn must function under Washington State and federal air quality regulations. The Puget Sound Clear Air Agency (PSCAA) is the regulatory agency for air quality in Auburn.

Appendix A Quick Reference Phone Numbers

City of Auburn	
Storm Drainage Utility	253-931-3010
Permit Center	253-931-3090
Valley Regional Fire Authority	253-591-5740
Solid Waste Management Utility	253-931-3038
Household Hazardous Waste	253-931-3038
Recycling Services	253-931-3038
Environmental Protection Agency (EPA) - Region X	800-424-4372
IMEX (Industrial Materials Exchange)	206-296-4899
King County	
Wastewater Program (septic)	206-296-4932
Household Hazardous Waste	206-296-4692
Pest Control Operators	206-205-4394
Tacoma-Pierce County Health Department	
On-Site Sewage and Underground Storage Tanks	253-798-6470
Hazardous Waste Section	253-798-6047
Solid Waste	253-798-6047
Hazardous Waste Line	800-287-6429
Pest Control Operators and Fumigators	253-798-6470
University of Washington Center for Urban Water Resources	206-543-6272
Washington State Department of Agriculture	360-902-2010
	877-301-4555
Washington State Department of Ecology	360-407-6000
Northwest Regional Office	425-649-7000
Dangerous/Hazardous Waste	360-407-6300
NPDES Stormwater or Wastewater Permits	360-407-6400
Spill Reporting	800-424-8802
Recycling	800-732-9253
Groundwater Quality and Protection	360-407-6400
Underground and Above Ground Storage Tanks	360-407-7170
Washington State University/Pierce County Cooperative Extension	253-798-7180
Puget Sound Clean Air Agency	800-552-3565

Appendix B Recycling/Disposal of Vehicle Fluids and Other Wastes

The information in this appendix was obtained from Ecology's Hazardous Waste Program. For a copy of "*Hazardous Waste Services Directory*", Publication #91-12S, Revised December 1994, call Ecology's Hazardous Waste and Toxic Reduction Program at 360-407-6721.

	RECOMMENDED MANAGEMENT
Antifreeze	Store separately for resale. Separate ethylene glycol from propylene glycol for off-site recycling. If not recyclable, send to Treatment, Storage, and Disposal Facility (TSDF) for disposal.
Batteries	INTACT: Accumulate under cover prior to sale, deliver to recycler or, return to manufacturer. BROKEN: Accumulate acid from broken batteries in resistant containers with secondary containment. Send to TSDF for disposal.
Brake fluid	Accumulate in separate, marked, closed container. Do not mix with waste oil. Recycle.
Fuel	Store gasoline, and diesel separately for use or resale. Mixtures of diesel, gasoline, oil, and other fluids may not be recyclable and may require expensive disposal.
Fuel filters	Drain fluids for use as product. With approval of local landfill operator, dispose to dumpster, if needed.
Oil filters	Puncture the filter dome and drain it for 24 hours. Put oil drained from filters into a "USED OIL ONLY" container. Keep drained filters in a separate container marked "USED OIL FILTERS ONLY." Locate a scrap metal dealer who will pick up and recycle filters. With approval of local landfill operator, dispose of drained filters to dumpster.
Paint	Accumulate oil-based and water-based paints separately for use or resale. If not recyclable, send accumulations to TSDF for disposal.
Power steering fluid	Same as for used oils
Shop towels/oily rags	Use cloth towels that can be laundered and reused. Accumulate used shop towels in a closed container. Sign up with an industrial laundry service that can recycle your towels.
Solvents	Consider using less hazardous solvents or switching to a spray cabinet that does not use solvent. Accumulate solvents separately. Consider purchasing a solvent still and recycling solvent on site. Do not mix with used oil. Do not evaporate as a means of disposal.
Transmission oil, differential and rear end fluids	Accumulate in your "USED OIL ONLY" container. Arrange for pickup for off-site recycling.
Used oils; including, crankcase oil, transmission oil, power steering fluid and differential/rear end oil	Keep used oil in a separate container marked "USED OIL ONLY." Do not mix with brake fluid, or used antifreeze. Do not mix with any other waste if material will be burned for heating. Arrange for pickup for off-site recycling.
Windshield washer fluid	Accumulate separately for use or resale. Discharge to on-site sewage disposal, or, if acceptable by the local sewer authority, discharge to sanitary sewer.

Appendix C Example of an Integrated Pest Management Program (IPM)

Integrated Pest Management (IPM) is a natural, long-term, ecologically based systems approach to controlling pest populations. This system uses techniques either to reduce pest populations or maintain them at levels below those causing economic injury, or to manipulate the populations so that they are prevented from causing injury. The goals of IPM are to encourage optimal selective pesticide use (away from prophylactic, broad spectrum use), and to maximize natural controls to minimize the environmental side effects.

A step-by-step comprehensive Integrated Pest Management (IPM) Program is provided below as a guide.

Introduction

This section provides a sound cultural approach to managing lawns and landscapes and minimizing runoff. Many homeowners or property managers will be able to implement most or all of this approach. Others will wish to hire these services out. For the do-it yourselfer, an array of resources are available to assist in the effort. Landscaping businesses, agricultural extensions, local agencies, master gardener programs, local nurseries, and the library can all provide assistance. Landscaping professionals (businesses) are particularly encouraged to practice IPM.

Definition

"Integrated pest management, or IPM, is an approach to pest control that uses regular monitoring to determine if and when treatments are needed, and employs physical, mechanical, cultural, and biological tactics to keep pest numbers low enough to prevent intolerable damage or annoyance. Least-toxic chemical controls are used as a last resort."

True IPM is a powerful approach that anticipates and prevents most problems through proper cultural practices and careful observation. Knowledge of the life cycles of the host plants and both beneficial and pest organisms is also important. The IPM section of this example is adapted from "Least Toxic Pest Management for Lawns" by Sheila Daar. Following the IPM process yields the information needed to minimize damage by weeds, diseases, and pests and to treat those problems with the least toxic approaches.

The IPM Process

Step 1. Correctly identify problem pests and understand their life cycle.

Learn more about the pest. Observe it and pay attention to any damage that may be occurring. Learn about the life cycle. Many pests are only a problem during certain seasons, or can only be treated effectively in certain phases of the life cycle.

Step 2. Establish tolerance thresholds for pests.

Every landscape has a population of some pest insects, weeds, and diseases. This is good because it supports a population of beneficial species that keep pest numbers in check. Beneficial organisms may compete with, eat, or parasitize disease or pest organisms. Decide on the level of infestation

that must be exceeded before treatment needs to be considered. Pest populations under this threshold should be monitored but do not need treatment. For instance, European crane flies usually do not do serious damage to a lawn unless there are between 25 to 40 larvae per square foot feeding on the turf in February (in normal weather years). Also, most people consider a lawn healthy and well maintained even with up to 20% weed cover, so treatment, other than continuing good maintenance practices, is generally unnecessary.

Step 3. Monitor to detect and prevent pest problems.

Regular monitoring is a key practice to anticipate and prevent major pest outbreaks. It begins with a visual evaluation of the lawn or landscape's condition. Take a few minutes before mowing to walk around and look for problems. Keep a notebook, record when and where a problem occurs, then monitor for it at about the same time in future years. Specific monitoring techniques can be used in the appropriate season for some potential problem pests, such as European crane fly.

Step 4. Modify the maintenance program to promote healthy plants and discourage pests.

A healthy landscape is resistant to most pest problems. Lawn aeration and overseeding along with proper mowing height, fertilization, and irrigation will help the grass out-compete weeds. Correcting drainage problems and letting soil dry out between waterings in the summer may reduce the number of crane-fly larvae that survive.

Step 5. If pests exceed the tolerance thresholds

Use cultural, physical, mechanical, or biological controls first. If those prove insufficient, use the chemical controls described below that have the least non-target impact. When a pest outbreak strikes (or monitoring shows one is imminent), implement IPM then consider control options that are the least toxic, or have the least non-target impact. Here are two examples of an IPM approach:

- **Red thread disease** is most likely under low nitrogen fertility conditions and most severe during slow growth conditions. Mow and bag the clippings to remove diseased blades. Fertilize lightly to help the grass recover, then begin grasscycling and change to fall fertilization with a slow-release or natural-organic fertilizer to provide an even supply of nutrients. Chemical fungicides are not recommended because red thread cannot kill the lawn.
- **Crane fly damage** is most prevalent on lawns that stay wet in the winter and are irrigated in the summer. Correct the winter drainage and/or allow the soil to dry between irrigation cycles; larvae are susceptible to drying out, so these changes can reduce their numbers. It may also be possible to reduce crane fly larvae numbers by using a power de-thatcher on a cool, cloudy day when feeding is occurring close to the surface. Studies are being conducted using beneficial nematodes that parasitize the crane fly larvae; this type of treatment may eventually be a reasonable alternative.

Only after trying suitable non-chemical control methods, or determining that the pest outbreak is causing too much serious damage, should chemical controls be considered. Study to determine what products are available and choose a product that is the least toxic and has the least non-target impact. Refer to the Operational BMPs for the use of Pesticides below for guidelines on choosing, storing, and using lawn and garden chemicals.

Step 6. Evaluate and record the effectiveness of the control, and modify maintenance practices to support lawn or landscape recovery and prevent recurrence.

Keep records! Note when, where, and what symptoms occurred, or when monitoring revealed a potential pest problem. Note what controls were applied and when, and the effectiveness of the control. Monitor next year for the same problems. Review your landscape maintenance and cultural practices to see if they can be modified to prevent or reduce the problem.

A comprehensive IPM Program should also include the proper use of pesticides as a last resort, and vegetation/fertilizer management to eliminate or minimize the contamination of stormwater.

Appendix D Recommendations for Management of Street Wastes

Introduction

This appendix is a summary, taken from the June 1999 draft Ecology publication titled Recommendations for Management of Street Waste (Publication WQ 99-09). The guidance document addresses waste generated from stormwater maintenance activities such as street sweeping and the cleaning of catch basins and, to a limited extent, other stormwater conveyance and treatment facilities. Limited information is available on the characteristics of wastes from detention/retention ponds, bioswales, and similar stormwater treatment facilities. The recommendations provided here may be generally applicable to these facilities, with extra diligence given to waste characterization.

These recommendations do not constitute rules or regulations, but are suggestions for street waste handling, reuse, and disposal supported by current regulations and the present state of knowledge of street waste constituents. The recommendations are intended to address the liquid and solid wastes collected during routine maintenance of stormwater catch basins, detention/retention ponds and ditches and similar stormwater treatment and conveyance structures, and street and parking lot sweeping. In addition to these recommendations, end users and other authorities may have their own requirements for street waste reuse and handling.

"Street Wastes" include liquid and solid wastes collected during maintenance of stormwater catch basins and detention/retention ponds and ditches and similar stormwater treatment and conveyance structures, and solid wastes collected during street and parking lot sweeping.

"Street Wastes," as defined here, does not include solids and liquids from street washing using detergents, cleaning of electrical vaults, vehicle wash sediment traps, restaurant grease traps, industrial process waste, sanitary sewage, mixed process, or combined sewage/stormwater wastes. Wastes from oil/water separators at sites that load fuel are not included as street waste. Street waste also does not include flood debris, land slide debris, and chip seal gravel.

Street waste does not ordinarily classify as dangerous waste. The owner of the stormwater facility and/or collector of street waste is considered the waste generator and is responsible for determining whether or not the waste designates as dangerous waste. Sampling to date has shown that material from routine maintenance of streets and stormwater facilities does not classify as dangerous waste (See Table IV-D-7). However, it is possible that street waste from spill sites could classify as dangerous waste. Street waste from areas with exceptionally high average daily traffic counts may contain contaminants - such as heavy metals, total petroleum hydrocarbons (TPH), and carcinogenic polycyclic aromatic hydrocarbons (c-PAH) - at levels that limit reuse options.

Street Waste Solids

Street waste is solid waste. While street waste from normal street and highway maintenance is not dangerous waste, it is solid waste, as defined under The Solid Waste Management Act (Chapter 70.95 RCW) and under Solid Waste Handling Standards (Chapter 173-350 WAC). Under the Solid Waste Management Act, local health departments have primary jurisdiction over solid waste

management. Street waste solids may contain contaminants at levels too high to allow unrestricted reuse. There are currently no specific references in the Solid Waste Handling Standards to facilities managing street waste solids. These facilities will typically fit under the section dealing with Piles Used for Storage and Treatment (Section 320 of the regulation). There are no specific references for reuse and disposal options for street wastes in the Solid Waste Handling Standards, although the Solid Waste Handling Standards do not apply to clean soils. In the rule, clean soils are defined as 'soils that do not contain contaminants at concentrations which could degrade the quality of air, waters of the state, soils, or sediments; or pose a thereat to the health of humans or other living organisms' (WAC 173-350-100). Whether or not a soil is a "clean soil" depends primarily upon the level of contaminants and, to a lesser degree, on the background level of contaminants at a particular location and the exposure potential to humans or other living organisms. Therefore, both the soil and potential land application sites must be evaluated to determine if a soil is a clean soil. Local health departments should be contacted to determine if a street waste meets the definition of "clean soil" when it will be reused as a soil.

There is no simple regulatory mechanism available to classify street waste solids as "clean" for uncontrolled reuse or disposal. Local health districts have historically used the Model Toxics Control Act Cleanup Regulation (MTCA) Method A residential soil cleanup levels to approximate "clean" and to make decisions on land application proposals. These regulations were amended in February 2001. The MTCA regulation is not intended to be directly applied to setting contaminant concentration levels for land application proposals. However, they may provide human health and environmental threat information and a useful framework for such decisions, when used in conjunction with other health and environmental considerations. The local health department should be contacted to determine local requirements for making this determination.

Using the old MTCA regulations, many local health departments have set a criteria of 200 mg/kg Total Petroleum Hydrocarbons (TPH) for diesel and heavy fuel oils as a threshold level for clean soil. Using the new MTCA terrestrial ecological evaluation procedures, allowable TPH levels for land application could range from 200 – 460 mg/kg, depending on site characteristics and intended land use. Street waste sampling has historically yielded TPH values greater than 200 mg/kg for hydrocarbons in the diesel and heavy oil range. These values typically reflect interference from natural organic material and, to a lesser extent, relatively immobile petroleum hydrocarbons. The mobile hydrocarbons that are of concern for groundwater protection are generally not retained with street waste solids. Ecology's Manchester Lab has developed an analytical method to reduce the problem of natural organic material being included in the TPH analysis for diesel and heavier range hydrocarbons. This new method, called NWTPH-Dx, reduces the background interference associated with vegetative matter by as much as 85% to 95%. However, even with the new methodology, TPH test results for street waste may still be biased by the presence of natural vegetative material and may still exceed 200 mg/kg. Where the laboratory results report no 'fingerprint' or chromatographic match to known petroleum hydrocarbons, the soils should not be considered to be petroleum contaminated soils.

Street waste solids frequently contain levels of carcinogenic PAHs (c-PAH) that make unrestricted use inappropriate. This is further complicated by analytical interference caused by organic matter that raises practical quantitation or reporting limits. To reduce the level of interference the use of US EPA Test Method 8270, incorporating the silica gel cleanup step, is recommended. The calculated c-PAH value can vary greatly depending upon how non-detect values are handled. The new MTCA Method A criterion for c-PAH is 0.1 mg/kg (the sum of all seven c-PAH parameters multiplied by the

appropriate toxicity equivalency factor) for unrestricted land uses. The MTCA criteria for soil cleanup levels for industrial properties is 2.0 mg/kg. Following this guidance, most sites where street wastes could be reused as soil will be commercial or industrial sites, or sites where public exposure will be limited or prevented.

Street waste treatment and storage facilities shall be permitted by the local health department as applicable. Under the Solid Waste Management Act, local health departments have primary jurisdiction over solid waste management

Street waste handling facilities are subject to the requirements of the Solid Waste Handling Standards. The specific requirements will depend upon the manner in which the waste is managed. Most facilities will probably be permitted under the section dealing with Piles Used for Storage and Treatment (Section 320 of the regulation)

For most facilities, permit requirements include a plan of operations, sampling, record keeping and reporting, inspections, and compliance with other state and local requirements. The plan of operation should include a procedure for characterization of the waste and appropriate reuse and disposal options, consistent with the recommendations in this document and applicable federal, state, and local requirements.

A street waste site evaluation (see sample at end of this appendix) is suggested for all street waste as a method to identify spill sites or locations that are more polluted than normal. The disposal and reuse options listed below are based on characteristics of routine street waste and are not appropriate for more polluted wastes. The collector of street waste should evaluate it both for its potential to be classified as dangerous waste and to not meet end users requirements.

Street waste that is suspected to be dangerous waste should not be collected with other street waste. Material in catch basins with obvious contamination (unusual color, staining, corrosion, unusual odors, fumes, and oily sheen) should be left in place or segregated until tested. Testing should be based on probable contaminants. Street waste that is suspected to be dangerous waste should be collected and handled by someone experienced in handling dangerous waste. If potential dangerous waste must be collected because of emergency conditions, or if the waste becomes suspect after it is collected, it should be handled and stored separately until a determination as to proper disposal is made. Street waste treatment and storage facilities should have separate "hot load" storage areas for such waste. **Dangerous Waste** includes street waste known and suspected to be dangerous waste. This waste must be handled following the Dangerous Waste Regulations (Chapter 173-303 WAC) unless testing determines it is not dangerous waste.

Spills should be handled by trained specialists. Public works maintenance crews and private operators conducting street sweeping or cleaning catch basins should have written policies and procedures for dealing with spills or suspected spill materials. Emergency Spill Response telephone numbers should be immediately available as part of these operating policies and procedures.

The end recipient of street waste must be informed of its source and may have additional requirements for its use or testing that are not listed here. This document is based primarily on average street waste's chemical constituents and their potential effect on human health and the environment. There are physical constituents (for example, broken glass or hypodermic needles) or characteristics (for example, fine grain size) that could also limit reuse options. Additional treatment such as drying, sorting, or screening may also be required, depending on the needs and requirements of the end user.

Street waste treatment and storage facilities owned or operated by governmental agencies should be made available to private waste collectors and other governmental agencies on a cost recovery basis. Proper street waste collection and disposal reduces the amount of waste released to the environment. The operators of street waste facilities should restrict the use of their facilities to certified and/or licensed waste collectors who meet their training and liability requirements.

The use of street waste solids under this guidance should not lead to designation as a hazardous waste site, requiring cleanup under MTCA. Exceeding MTCA Method A unrestricted land use cleanup levels in street waste and products made from street waste, does not automatically make the site where street waste is reused a cleanup site. A site is reportable only if "-a release poses a threat to human health or the environment-" (Model Toxic Control Act). The reuse options proposed below are designed to meet the condition of not posing a threat to human health or the environment.

Testing of street waste solids will generally be required as part of a plan of operation that includes procedures for characterization of the waste. Testing frequency, numbers of samples, parameters to be analyzed, and contaminant limit criteria should all be provided as part of an approved plan of operation. Table IV-D-5 and Table IV-D-6 provide some recommended parameters and sampling frequencies for piles of street waste solids from routine street maintenance. These are provided as guidance only and are intended to assist the utility and the local health department in determining appropriate requirements. Sampling requirements may be modified, over time, based on accumulated data. When the material is from a street waste facility or an area that has never been characterized by testing, the test should be conducted on a representative sample before co-mingling with other material. Testing in these instances would be to demonstrate that the waste does not designate as dangerous waste and to characterize the waste for reuse. At a minimum, the parameters in Table IV-D-5 are recommended for these cases. Note that it will generally not be necessary to conduct Toxic Characteristic Leaching Procedure (TCLP) analyses when the observed values do not exceed the recommended values in Table IV-D-5. Table IV-D-7 illustrates some observed relationships between total metals and TCLP metals values.

For further information on testing methods and sampling plans, refer to:

- SW 846 (US EPA, Office of Solid Waste, Test Methods for Evaluating Solid Wastes, 3rd Edition) and
- Standard Methods for the Examination of Water and Wastewater (American Public Health Association, et al., 18th Edition, 1992)

For street waste not exceeding the suggested maximum values in Table IV-D-5 the following street waste solids reuse and disposal options are recommended:

- Street sweepings that consist primarily of leaves, pine needles and branches, and grass cuttings from mowing grassy swales can be composted. Litter and other foreign material must be removed prior to composting or the composting facility must provide for such removal as part of the process. The screened trash is solid waste and must be disposed of at an appropriate solid waste handling facility.
- Coarse sand screened from street sweeping after recent road sanding may be reused for street sanding, provided there is no obvious contamination from spills. The screened trash is solid waste and must be disposed of at an appropriate solid waste handling facility.
- Roadside ditch cleanings, not contaminated by a spill or other release and not associated with a stormwater treatment system such as a bioswale, may be screened to remove litter and separated into soil and vegetative matter (leaves, grass, needles, branches, etc.). The soils from these activities are not generally regulated as solid waste. Ditching material that may be contaminated must be stored, tested, and handled in the same manner as other street waste solids. It is the generator's responsibility to visually inspect and otherwise determine whether the materials may be contaminated.
- Construction street waste - solids collected from sweeping or in stormwater treatment systems at active construction sites - may be placed back onto the site that generated it, or managed by one of the methods listed below, provided that it has not been contaminated as a result of a spill. For concrete handling at construction site, refer to BMP C151 in Volume II.
- Screened street waste soils may be used as feedstock materials for topsoil operations. This option should be reserved for street waste soils with very low levels of contaminants. Diluting street waste soils with clean soils or composted material must not be used as a substitute for treatment or disposal. There may be physical contaminants (for example, glass, metal, nails, etc.) in street waste that cannot be entirely screened from the waste. Where present, these contaminants in street waste could preclude its use as feedstock material for topsoil operations.
- Fill in parks, play fields, golf courses, and other recreational settings where direct exposure by the public is limited or prevented. One way to prevent or limit direct exposure is to cover the fill with sod, grass, or other capping material to reduce the risk of soil being ingested. The level of contaminants in the street waste must be evaluated to ensure that the soils meet the definition of clean soils when used in this manner.
- Fill in commercial and industrial areas, including soil or top dressing for use at industrial sites, roadway medians, airport infields, and similar sites where there is limited direct human contact with the soil and the soils will be stabilized with vegetation or other means. The level of contaminants in the street waste must be

evaluated to ensure that the soils meet the definition of clean soils when used in this manner.

- Top dressing on roadway slopes, road or parking lot construction material, road or parking lot subgrade, or other road fill. The level of contaminants in the street waste must be evaluated to ensure that the soils meet the definition of clean soils when used in this manner.
- Daily cover or fill in a permitted municipal solid waste landfill, provided the street waste solids have been dewatered. Street waste solids may be acceptable as final cover during a landfill closure. The local health department and landfill operator should be consulted to determine conditions of acceptance.
- Treatment at a permitted contaminated soil treatment facility.
- Recycling through incorporation into a manufactured product, such as Portland cement, prefab concrete, or asphalt. The facility operator should be consulted to determine conditions of acceptance.
- Other end uses as approved by the local health department.
- Disposal at an appropriate solid waste handling facility.

For street waste that exceeds the suggested maximum values in Table IV-D-5, the following street waste solids reuse and disposal options are recommended:

- Treatment at a permitted contaminated soil treatment facility.
- Recycling through incorporation into a manufactured product, such as Portland cement, prefab concrete, or asphalt. The facility operator should be consulted to determine conditions of acceptance.
- Other end uses as approved by the local health department.
- Disposal at an appropriate solid waste handling facility.

Street Waste Liquids

Street waste collection should emphasize solids in preference to liquids. Street waste solids are the principal objective in street waste collection and are substantially easier to store and treat than liquids.

Street waste liquids require treatment and/or must follow location limitations before their discharge. Street waste liquids usually contain high amounts of suspended and total solids and adsorbed metals. Treatment requirements depend on the discharge location.

Discharges to sanitary sewer and storm sewer systems must be approved by the entity responsible for operation and maintenance of the system. Ecology will not generally require waste discharge permits for discharge of stormwater decant to sanitary sewers or to stormwater treatment BMPs constructed and maintained in accordance with Ecology's Stormwater Management Manual for Western Washington. (See Volume V for further detail).

The following disposal options are recommended, in order of preference, for catch basin decant liquid and for water removed from stormwater treatment facilities.

Under the Municipal General Permit, municipalities are required to use this guidance in determining appropriate means of dealing with street wastes from stormwater maintenance activities. Ecology Northwest Regional Office water quality staff can help you with treatment standards and permit requirements for your particular situation.

Discharge of catch basin decant liquids to a municipal sanitary sewer connected to a Public Owned Treatment Works (POTW) is the preferred disposal option. Discharge to a municipal sanitary sewer requires the approval of the sewer authority. Street waste liquids discharged to a POTW may be treated at a combined street waste liquid and solid facility (decant facility) or at separate liquids only facilities. These liquid only facilities may consist of modified type 2 catch basins (with a flow restrictor or oil/water separator) or water quality vaults, strategically located through the sanitary collection system. These should provide 24 hour detention for the expected volumes and should be constructed and operated to ensure that the decant discharge does not re-suspend sediments. Sewer authorities should require periodic sampling and decant facility operators should test their waste effluent on a regular basis, but street waste decant liquid should meet the most restrictive local limits with 24 hours of undisturbed gravity settling. Overnight settling is more practical and will likely meet most local pretreatment requirements. (See Table IV-D-10 for typical catch basin decant values from King County's decant facility at Renton).

Discharge of stormwater runoff into sanitary sewers requires a Metro-King County Discharge permit to avoid hydraulic overloads and treatment performance problems.

Stormwater removed from catch basins and stormwater treatment wetvaults may be discharged into a Basic or Enhanced Stormwater Treatment BMP.

Decant liquid collected from cleaning catch basins and stormwater treatment wetvaults may be discharged back into the storm sewer system under the following conditions:

- The preferred disposal option of discharge to sanitary sewer is not reasonably available, **and**
- The discharge is to a Basic or Enhanced Stormwater Treatment Facility (See Volume V), **and**
- The storm sewer system owner/operator has granted approval and has determined that the treatment facility will accommodate the increased loading.

Pretreatment may be required to protect the treatment BMP.

Reasonable availability will be determined by the stormwater utility and by the circumstances including such factors as distance, time of travel, load restrictions, and capacity of the stormwater treatment facility. Auburn may choose not to allow discharge back to the storm sewer system.

Discharging back into the storm sewer is an acceptable option, under certain conditions:

- Other practical means are not reasonably available, **and**
- Pretreatment is provided by discharging to a modified type 2 catch basin (with a flow restrictor or oil/water separator) or water quality vault, **and**
- The discharge is upstream of a basic or enhanced stormwater treatment BMP, **and**
- The storm sewer system owner/operator has granted approval.

Other practical means include the use of decanting facilities and field decant sites that discharge to sanitary sewers or discharge to an approved stormwater treatment BMP.

Limited field testing of flocculent aids has been conducted. While the use of flocculent aids is promising, sufficient testing has not been conducted to allow approval of any specific product or process. In general, the following conditions must be met for flocculent use to be approved:

- The flocculent must be non-toxic under circumstances of use and approved for use by the Department of Ecology.
- The decant must be discharged to an approved basic or enhanced stormwater treatment BMP, with sufficient capacity and appropriate design to handle the anticipated volume and pollutant loading.
- The discharge must be approved by the storm sewer system owner/operator.

Water removed from stormwater ponds, vaults, and oversized catch basins may be returned to storm sewer system. Stormwater ponds, vaults, and oversized catch basins contain substantial amounts of liquid, which hampers the collection of solids and poses problems if the removed waste must be hauled away from the site. Water removed from these facilities may be discharged back into the pond, vault, or catch basin provided:

- Clear water removed from a stormwater treatment structure may be discharged directly to a downgradient cell of a treatment pond or into the storm sewer system.
- Turbid water may be discharged back into the structure it was removed from if:
  - The removed water has been stored in a clean container (eductor truck, Baker tank, or other appropriate container used specifically for handling stormwater or clean water) and
  - There will be no discharge from the treatment structure for at least 24 hours.
- The discharge must be approved by the storm sewer system owner/operator.

Vegetation management and structural integrity concerns sometimes require that the ponds be refilled as soon after solids removal as possible. For ponds and other systems relying on biological processes for waste treatment, it is often preferable to reuse at least some portion of the removed water.

Site Evaluation

A site evaluation is suggested as method to identify spill sites or locations that are more polluted than normal.

The site evaluation will aid in determining if waste should be handled as dangerous waste and in determining what to test for if dangerous waste is suspected. The site evaluation will also help to determine if the waste does not meet the requirements of the end users.

There are three steps to a site evaluation:

1. A **historical review** of the site for spills, previous contamination, and nearby toxic cleanup sites and dangerous waste and materials.

   The historical review will be easier if done on an area wide basis prior to scheduling any waste collection. The historical review should be more thorough for operators who never collected waste at a site before. At a minimum, the historical review should include operator knowledge of the area's collection history or records kept from previous waste collections.

   Private operators should ask the owner of the site for records of previous contamination and the timing of the most recent cleaning. Ecology's Hazardous Substance Information Office maintains a Toxic Release Inventory and a "Facility Site" web page, tracking more than 15,000 sites. This information is available through the Internet at http://www.wa.gov/ecology/iss/fsweb/fshome.html or by calling a toll-free telephone number (800-633-7585). The web page allows anyone with web-access to search for facility information by address, facility name, town, zip code, and SIC code, etc. It lists why the Department of Ecology is tracking each one (NPDES, TSCA, RCRA, Clean Air Act, etc.), as well as who to call within Ecology to find out more about the given facility.

2. An **area visual inspection** for potential contaminant sources such as a past fire, leaking tanks and electrical transformers, and surface stains.

   The area around the site should be evaluated for contaminant sources prior to collection of the waste. The area visual inspection may be done either as part of multiple or as single site inspections. If a potential contaminant source is found, the waste collection should be delayed until the potential contaminant is assessed.

   A second portion of the area visual inspection is a subjective good housekeeping evaluation of the area. Locations with poor housekeeping commonly cut corners in less obvious places and should be inspected in greater detail for illegal dumping and other contamination spreading practices.

3. A waste and container inspection before and during collection.

   The inspection of the waste and catch basin or vault is the last and perhaps most critical step in the site evaluation.

   For example, if the stormwater facility has an unusual color in or around it, then there is a strong possibility that something could have been dumped into it. Some colors to be particularly wary of are yellow-green from antifreeze dumping and black and/or rainbow sheen from oil and/or grease dumping. In addition, if any staining or corrosion is observed, then a solvent may have been dumped.

Fumes are also good indicators of potential dangerous conditions or dangerous waste. Deliberate smelling of catch basins should be avoided for worker safety, but suspicious odors may be encountered from catch basins thought to be safe. Some suspicious odors are rotten eggs (hydrogen sulfide is present), gasoline or diesel fumes, or solvent odors. If unusual odors are noted, contact a dangerous waste inspector before cleaning the basin.

Finally, operator experience is the best guide to avoid collection of contaminated waste.

Table IV-D-2. Typical TPH Levels in Street Sweeping and Catch Basin Solids

Reference	Street Sweeping (mg/kg)	Catch Basin Solid (mg/kg)
Snohomish County [1] (Landau 1995)	390 – 4300	
King County [(1)] (Herrera 1995)		123 – 11049 (Median 1036)
Snohomish County & Selected Cities [1] (W & H Pacific, 1993)	163 - 1500 (Median 760)	163 – 1562 (Median 760)
City of Portland [2] (Bresch)		MDL – 1830 (Median – 208)
Oregon[1] (Collins; ODOT 1998) Oregon [3] (Collins; ODOT 1998)	1600 – 2380 98 - 125	

[1] Method WTPH 418.1; does not incorporate new methods to reduce background interference due to vegetative material

[2] Method NWTPH-Dx

[3] Method WTPH – HCID

Table IV-D-3. Typical c-PAH Values in Street Waste Solids and Related Materials

Sample Source	City of Everett					WSDOT	
Analyte	Street Sweepings	Soil	3-Way Topsoil	Vactor Solids	Leaf & Sand	Sweepings – Fresh	Sweepings Weathered
Benzo(a)anthracene	0.1U	0.076U	0.074U	0.21	0.45	0.56	0.40
Chrysene	0.14	0.09	0.074U	0.32	0.53	0.35	0.35
Benzo(b)fluoranthene	0.11	0.076U	0.074U	0.27	0.52	0.43	0.51
Benzo(k)fluoranthene	0.13	0.076U	0.074U	0.25	0.38	0.39	0.40
Benzo(a)pyrene	0.13	0.076U	0.074U	0.26	0.5	0.41	0.33U
Indeno(1,2,3-cd)pyrene	0.1U	0.076U	0.074U	0.19	0.39	NR	NR
Dibenzo(a,h)anthracene	0.1U	0.076U	0.074U	0.081	0.12	0.39	0.33U
Revised MTCA Benzo(a)pyrene [ND=PQL]	0.215	0.134	0.134	0.388	0.727	0.708	0.597
Benzo(a)pyrene [ND=1/2 PQL]	0.185	0.069	0.067	0.388	0.727	0.708	0.366
Benzo(a)pyrene [See * below]	0.185	0.069	0	0.388	0.727	0.708	0.366
Benzo(a)pyrene [ND=0]	0.155	0.001	0	0.388	0.727	0.708	0.135

*If the analyte was not detected for any PAH, then ND=0; If analyte was detected in at least 1 PAH, then ND=1/2PQL; If the average concentration (using ND=1/2 PQL) is greater than the maximum detected value, then ND=Maximum value.
The new Method A soil cleanup level for unrestricted land use is 0.1 mg/Kg for BAP. (WAC 173-340-900, Table 740-1)
The new Method A soil cleanup level for industrial properties is 2 mg/Kg for BAP. (WAC 173-340-900, Table 745-1)

Table IV-D-4. Typical Metals Concentrations in Catch Basin Sediments

PARAMETER	Ecology 1993	Thurston 1993	King County 1995	King County 1995
METALS; TOTAL (mg/kg)	(Min – Max)	(Min – Max)	(Min - Max)	Mean
As	<3 -- 24	.39 -- 5.4	4 – 56	0.250
Cd	0.5 -- 2.0	< 0.22 -- 4.9	0.2 – 5.0	0.5
Cr	19 -- 241	5.9 -- 71	13 - 100	25.8
Cu	18 -- 560	25 -- 110	12 - 730	29
Pb	24 -- 194	42 -- 640	4 – 850	80
Ni	33 -- 86	23 -- 51	14 – 41	23
Zn	90 -- 558	97 -- 580	50 – 2000	130
Hg	.04 -- .16	.024 -- .193		

Table IV-D-5. Recommended Parameters & Suggested Values for Determining Reuse & Disposal Options

Parameter	Suggested Maximum Value
Arsenic, Total	20.0 mg/kg [(a)]
Cadmium, Total	2.0 mg/kg [(b)]
Chromium, Total	42 mg/kg [(c)]
Lead, total	250 mg/kg [(d)]
Nickel	100 mg/kg [(e)]
Zinc	270 mg/kg [(e)]
Mercury (Inorganic)	2.0 mg/kg [(f)]
PAHs (Carcinogenic)	0.1 – 2.0 mg/kg (see Note at [(g)] below)
TPH (Heavy Fuel Oil)	200 - 460 mg/kg (see Note at [(h)] below)
TPH (Diesel)	200 – 460 mg/kg (see Note at [(h)] below)
TPH (Gasoline)	100 mg/kg [(i)]
Benzene	0.03 mg/kg [(i)]
Ethylbenzene	6 mg/kg [(i)]
Toluene	7 mg/kg [(i)]
Xylenes (Total)	9 mg/kg [(i)]

[a] Arsenic: from MTCA Method A - Table 740-1: Soil cleanup levels for unrestricted land uses

[b] Cadmium: from MTCA Method A – Table 740-1: Soil cleanup levels for unrestricted land uses.

[c] Chromium; from MTCA Method A - Table 740-1: Soil cleanup levels for unrestricted land uses

[d] Lead; from MTCA Method A – Table 740-1: Soil cleanup levels for unrestricted land uses

[e] Nickel and Zinc; from MTCA Table 749-2: Protection of Terrestrial Plants and Animals

[f] Mercury; from MTCA Method A – Table 740-1: Soil cleanup levels for unrestricted land uses

[g] PAH-Carcinogenic; from MTCA Method A – Table 740-1: Soil cleanup levels for unrestricted land uses and Table 745-1, industrial properties, based on cancer risk via direct contact with contaminated soil (ingestion of soil) in residential land use situations and commercial/industrial land uses. Note: The local health department may permit higher levels as part of a Plan of Operation, where they determine that the proposed end use poses little risk of direct human contact or ingestion of soil.

[h] TPH: from MTCA Tables 749-2 & 749-3: Protection of Terrestrial Plants and Animals. Values up to 460 mg/kg may be acceptable where the soils are capped or covered to reduce or prevent exposure to terrestrial plants and animals. Where the laboratory results report no 'fingerprint' or chromatographic match to known petroleum hydrocarbons, the soils will not be considered to be petroleum contaminated soils.

[i] BETX; from MTCA Method A - Table 740-1: Soil cleanup levels for unrestricted land uses.

Table IV-D-6. Recommended Sampling Frequency for Street Waste Solids

Cubic Yards of Solids	Minimum Number of Samples
0 – 100	3
101 – 500	5
501 – 1000	7
1001 – 2000	10
>2000	10 + 1 for each additional 500 cubic yards

*Modified from Ecology's Interim Compost Guidelines

Table IV-D-7. Pollutants in Catch Basin Solids – Comparison to Dangerous Waste Criteria

PARAMETER	Range of Values in Catch Basin Waste	Range of Values in Catch Basin Waste	Dangerous Waste Criteria
METALS	**Total Metals (mg/kg)**	**TCLP Metals (mg/kg)**	**TCLP values (mg/l)**
Arsenic	<3 – 56	< .02 - 0 .5	5.0
Cadmium	<.22 – 5	.0002 - .03	1.0
Chromium	5.9 - 241	.0025 - .1	5.0
Copper	12 - 730	.002 -- .88	none
Lead	4 - 850	.015 -- 3.8	5.0
Nickel	23 - 86	< .01 -- .36	none
Zinc	50 - 2000	.04 -- 6.7	none
Mercury	.02 - .19	.0001 -- .0002	0.2

* Data from Thurston County (Thurston County 1993), King County (Herrera 1995) and Ecology (Serdar; Ecology 1993).

Table IV-D-8. Typical Catch Basin Decant Values Compared to Surface Water Quality Criteria

PARAMETER	State Surface Water Quality Criteria		Range of Values Reported	Range of Values Reported
METALS	Freshwater Acute (ug/l – dissolved metals)	Freshwater Chronic (ug/l – dissolved metals)	Total Metals (ug/l)	Dissolved Metals (ug/l)
Arsenic	360	190	100 – 43000	60 - 100
Cadmium*	2.73	0.84	64 - 2400	2 - 5
Chromium (total)			13 -- 90000	3 - 6
Chromium (III)*	435	141		
Chromium (VI)	0.5	10		
Copper*	13.04	8.92	81 -- 200000	3 - 66
Lead*	47.3	1.85	255 -- 230000	1 - 50
Nickel*	1114	124	40 -- 330	20 - 80
Zinc*	90.1	82.3	401 -- 440000	1900 - 61000
Mercury	2.10	.012	0.5 -- 21.9	

*Hardness dependent; hardness assumed to be 75 mg/l

Table IV-D-9. Typical Values for Conventional Pollutants in Catch Basin Decant

PARAMETER	Ecology 1993	(Min - Max)	King County 1995	(Min - Max)
Values as mg/l; except where stated	Mean		Mean	
PH	6.94	6.18 - 7.98	8	6.18 - 11.25
Conductivity (umhos/cm)	364	184 - 1110	480	129 - 10,100
Hardness (mg/l CaCO3)	234	73 - 762		
Fecal Coliform (MPN/100 ml)	3000			
BOD	151	28 - 1250		
COD	900	120 - 26,900		
Oil & Grease	11	7.0 - 40	471	15 - 6242
TOC	136	49 - 7880	3670	203 - 30,185
Total Solids	1930	586 - 70,400		
Total Dissolved Solids	212	95 - 550		
Total Suspended Solids	2960	265 - 111,000		
Settleable Solids (ml/l/hr)	27	2 - 234	57	1 - 740
Turbidity (ntu)	1000	55 - 52,000	4673	43 - 78,000

Table IV-D-10. Catch Basin Decant Values Following Settling*

Parameter; Total Metals in mg/l	Portland – Inverness Site Min - Max	King County - Renton Min - Max	METRO Pretreatment Discharge Limits
Arsenic	.0027 .015	< MDL – 0.12	4
Cadmium	.0009 - .0150	< MDL – 0.11	0.6
Chromium	.0046 - .0980	.017 – .189	5
Copper	.015 - .8600	.0501 – .408	8
Lead	.050 – 6.60	.152 – 2.83	4
Nickel	.0052 - .10	.056 - .187	5
Silver	.0003 - .010	< MDL	3
Zinc	.130 – 1.90	.152 – 3.10	10
Settleable Solids; ml/L	No Data	.02 - 2	7
Nonpolar FOG	5.7 - 25	5 - 22	100
Ph (std)	6.1 – 7.2	6.74 – 8.26	5.0 - 12.0
TSS	2.8 - 1310		
Recorded Total Monthly Flow; Gallons	Data not available	31,850 - 111,050	
Recorded Max. Daily Flow; Gallons	Data not available	4,500 - 18,600	25,000 GPD
Calculated Average Daily Flow; GPD	Data not available	1517 - 5428	

* Data from King County's Renton Facility (data from 1998 – 1999) and the City of Portland's Inverness Site (data from 1999 – 2001); detention times not provided

Volume V – Water Quality Treatment BMPs Table of Contents

Purpose of this Volume 603
Content and Organization of this Volume 603

Chapter 1 Treatment Facility Selection Process 604

1.1 Step-by-Step Selection Process for Treatment Facilities 604

Chapter 2 Treatment Facility Menus 610

2.1 Oil Control Menu 610
2.1.1 Performance Goal 610
2.1.2 Options 610
2.1.3 Application on the Project Site 611
2.2 Phosphorus Treatment Menu 611
2.2.1 Performance Goal 611
2.2.2 Options 611
2.3 Enhanced Treatment Menu 612
2.3.1 Performance Goal 612
2.3.2 Options 612
2.4 Basic Treatment Menu 613
2.4.1 Performance Goal 613
2.4.2 Options 614

Chapter 3 General Requirements for Stormwater Facilities 615

3.1 Design Flow Volume and Flow Rate 615
3.1.1 Water Quality Design Flow Volume 615
3.1.2 Water Quality Design Flow Rate 616
3.1.3 Flows Requiring Treatment 616
3.2 Sequence of Facilities 617
3.3 Setbacks, Slopes, and Embankments 618
3.3.1 Setbacks 618
3.3.2 Side Slopes and Embankments 619
3.4 Facility Liners 620
3.4.1 General Design Criteria 620
3.4.2 Design Criteria for Treatment Liners 622
3.4.3 Design Criteria for Low Permeability Liner Options 622

3.4.3.1 Compacted Till Liners 622
3.4.3.2 Clay Liners 623
3.4.3.3 Geomembrane Liners 623
3.4.3.4 Concrete Liners 624
3.5 Hydraulic Structures 624
3.5.1 Flow Splitter Designs 624
3.5.1.1 General Design Criteria 624
3.5.1.2 Materials 624
3.5.2 Flow Spreading Options 627
3.5.2.1 General Design Criteria 627
Chapter 4 Pretreatment 632
4.1 Purpose 632
4.2 Application 632
4.3 BMPs for Pretreatment 632
4.3.1 BMP T610 Presettling Basin 632
4.3.1.1 Purpose and Definition 632
4.3.1.2 Application and Limitations 632
4.3.1.3 Design Criteria 632
4.3.1.4 Site Constraints and Setback Requirements 633
Chapter 5 Infiltration and Bio-infiltration Treatment Facilities 634
5.1 Purpose 634
5.2 Application 634
5.3 Site Suitability 634
5.3.1 Setback Criteria (SSC-1) 635
5.3.2 Groundwater Protection Areas (SSC-2) 635
5.3.3 High Vehicle Traffic Areas (SSC-3) 635
5.3.4 Soil Infiltration Rate/Drawdown Time for Treatment (SSC-4) 636
5.3.4.1 Infiltration Rates: Short-term and Long-term 636
5.3.4.2 Drawdown Time 636
5.3.5 Depth to Bedrock, Water Table, or Impermeable Layer (SSC-5) 636
5.3.6 Soil Physical and Chemical Suitability for Treatment (SSC-6) 637
5.3.7 Seepage Analysis and Control (SSC-7) 637
5.3.8 Cold Climate and Impact of Roadway Deicers (SSC-8) 637
5.3.9 Verification Testing of the Completed Facility 637
5.4 Site Characterization 638
5.4.1 Field Methods used to Determine Subsurface Characterization 638
5.4.1.1 Test Holes or Pits 638
5.4.1.2 Infiltration Rate Determination 639
5.4.1.3 Infiltration Receptor 639

5.4.2 Design Infiltration Rate Determination 640
5.4.2.1 Three Methods for Determining Long-term Infiltration Rate for Sizing the Infiltration Basin, Trench, or Swale 640
5.4.2.2 General Sizing Criteria 642
5.4.2.3 General Design Criteria 643
5.4.2.4 General Construction Criteria 643
5.4.2.5 Maintenance Criteria 644
5.4.2.6 Verification of Performance 644
5.5 BMPs for Infiltration and Bio-infiltration Treatment 644
5.5.1 BMP T710 Infiltration Basins 645
5.5.1.1 Description 645
5.5.1.2 Design Criteria Specific for Basins 645
5.5.1.3 Maintenance Criteria for Basins 645
5.5.2 BMP T720 Infiltration Trenches 646
5.5.2.1 Description 646
5.5.2.2 Design Criteria 646
5.5.2.3 Construction Criteria 646
5.5.2.4 Maintenance Criteria 647
5.5.3 BMP T730 Bio-infiltration Swale 648
5.5.3.1 Description 648
5.5.3.2 Additional Design Criteria Specific for Bio-infiltration Swales 648
Chapter 6 Sand Filtration Treatment Facilities 650
6.1 Purpose 650
6.2 Description 650
6.3 Applications and Limitations 656
6.4 Site Suitability 656
6.5 Design Criteria 656
6.5.1 Objective 656
6.5.2 Sand Filter Sizing 656
6.6 Construction Criteria 659
6.7 Maintenance Criteria 659
6.7.1 BMP T810 Sand Filter Vault 661
6.7.1.1 Description: (Figure V-6-13 and Figure V-6-14) 661
6.7.1.2 Applications and Limitations 661
6.7.1.3 Additional Design Criteria for Vaults 661
6.7.2 BMP T820 Linear Sand Filter 664
6.7.2.1 Description 664
6.7.2.2 Application and Limitations 664
6.7.2.3 Additional Design Criteria for Linear Sand Filters 664
Chapter 7 Biofiltration Treatment Facilities 666
7.1 Purpose 666
7.2 Applications 666

7.3 Site Suitability 666
7.4 Best Management Practices 666
7.4.1 BMP T910 Basic Biofiltration Swale 667
7.4.1.1 Description: 667
7.4.1.2 Design Criteria: 667
7.4.1.3 Bypass Guidance 671
7.4.1.4 Sizing Procedure for Biofiltration Swales 671
7.4.1.5 Soil Criteria 678
7.4.1.6 Vegetation Criteria 679
7.4.1.7 Construction Criteria 679
7.4.1.8 Maintenance Criteria 679
7.4.2 BMP T920 Wet Biofiltration Swale 683
7.4.2.1 Description 683
7.4.2.2 Performance Objectives 683
7.4.2.3 Applications/Limitations 683
7.4.2.4 Criteria 683
7.4.3 BMP T930 Continuous Inflow Biofiltration Swale 685
7.4.3.1 Description: 685
7.4.3.2 Applications 685
7.4.3.3 Design Criteria 685
7.4.4 BMP T940 Basic Filter Strip 686
7.4.4.1 Description 686
7.4.4.2 Applications/Limitations 686
7.4.4.3 Design Criteria for Filter strips: 688
7.4.4.4 Sizing Procedure 688
7.4.5 BMP T950 Narrow Area Filter Strip 689
7.4.5.1 Description: 689
7.4.5.2 Applications/Limitations: 689
7.4.5.3 Design Criteria: 689
Chapter 8 Wetpool Facilities 691
8.1 Purpose 691
8.2 Best Management Practices 691
8.2.1 BMP T1010 Wetponds - Basic and Large 692
8.2.1.1 Description: 692
8.2.1.2 Design Criteria: 692
8.2.1.3 Sizing Procedure 695
8.2.1.4 Wetpool Geometry 701
8.2.1.5 Berms, Baffles, and Slopes 701
8.2.1.6 Embankments 702
8.2.1.7 Inlet and Outlet 702
8.2.1.8 Access and Setbacks 703
8.2.1.9 Planting Requirements 703
8.2.1.10 Recommended Design Features 704

8.2.1.11 Construction Criteria: 707
8.2.1.12 Operation and Maintenance: 707
8.2.2 BMP T1020 Wetvaults 708
8.2.2.1 Description: 708
8.2.2.2 Applications and Limitations: 708
8.2.2.3 Design Criteria: 708
8.2.2.4 Wetpool Geometry 710
8.2.2.5 Vault Structure 710
8.2.2.6 Inlet and Outlet 711
8.2.2.7 Access Requirements 711
8.2.2.8 Access Roads, Right of Way, and Setbacks 711
8.2.2.9 Recommended Design Features 712
8.2.2.10 Construction Criteria 712
8.2.2.11 Operation and Maintenance 712
8.2.2.12 Modifications for Combining with a Baffle Oil/Water Separator 713
8.2.3 BMP T1030 Stormwater Treatment Wetlands 714
8.2.3.1 Description 714
8.2.3.2 Applications and Limitations 714
8.2.3.3 Design Criteria 714
8.2.3.4 Sizing Procedure 714
8.2.3.5 Wetland Geometry 715
8.2.3.6 Lining Requirements 715
8.2.3.7 Inlet and Outlet 716
8.2.3.8 Access and Setbacks 716
8.2.3.9 Planting Requirements 719
8.2.3.10 Construction Criteria 719
8.2.3.11 Operation and Maintenance 719
8.2.4 BMP T1040 Combined Detention and Wetpool Facilities 720
8.2.4.1 Description: 720
8.2.4.2 Applications and Limitations: 720
8.2.4.3 Design Criteria: 720
8.2.4.4 Sizing 723
8.2.4.5 Detention and Wetpool Geometry 723
8.2.4.6 Berms, Baffles and Slopes 723
8.2.4.7 Inlet and Outlet 723
8.2.4.8 Access and Setbacks 723
8.2.4.9 Planting Requirements 723
8.3 Combined Detention and Wetvault 724
8.4 Combined Detention and Stormwater Wetland 726
8.4.1 Sizing Criteria 726
8.4.2 Design Criteria 726
8.4.3 Inlet and Outlet Criteria 726
8.4.4 Planting Requirements 726

Chapter 9 Oil and Water Separators 727
9.1 Purpose 727
9.2 Description 727
9.3 Applications/Limitations 727
9.4 Site Suitability 730
9.5 Design Criteria 731
9.5.1 General Considerations 731
9.5.2 Criteria for Separator Bays 731
9.5.3 Criteria for Baffles 732
9.6 Oil and Water Separator BMPs 732
9.6.1 BMP T1110 API (Baffle type) Separator Bay 733
9.6.1.1 Design Criteria 733
9.6.1.2 Sizing Criteria 733
9.6.2 BMP T1111 Coalescing Plate (CP) Separator Bay 735
9.6.2.1 Design Criteria 735
9.6.2.2 Operation and Maintenance 735
Chapter 10 Emerging Technologies 737
10.1 Background 737
10.2 Emerging Technology and the City of Auburn 737
10.3 Ecology Role in Evaluating Emerging Technologies 737
10.4 Evaluation of Emerging Technologies 737
10.5 Assessing Levels of Development of Emerging Technologies 738
10.6 Examples of Emerging Technologies for Stormwater Treatment and Control 739
Appendix A Basic Treatment Receiving Waters 741
Appendix B Procedure for Conducting a Pilot Infiltration Test 743
Appendix C Geotextile Specifications 745
Appendix D Turbulence and Short-Circuiting Factor 747

Volume
V

Volume V:
Water Quality Treatment BMPs

Purpose of this Volume

This volume focuses on treatment of runoff to remove pollutants at developed sites. Typical pollutants of concern include sand, silt, and other suspended solids; metals such as copper, lead, and zinc; nutrients (e.g., nitrogen and phosphorous); certain bacteria and viruses; and organics such as petroleum hydrocarbons and pesticides. Methods of pollutant removal include sedimentation/settling, filtration, infiltration, plant uptake, ion exchange, adsorption, and bacterial decomposition. Floatable pollutants such as oil, debris, and scum can be removed with separator structures. The purpose of this volume is to provide criteria for selection and design of permanent runoff treatment facilities.

Use this volume to select permanent water quality treatment BMPs. Include the BMPs and the design criteria used in your Stormwater Site Plan (see Volume I). This volume should be used as an aid in designing and constructing water quality treatment BMPs.

Content and Organization of this Volume

Volume V contains ten chapters and four appendices:

- Chapter 1 outlines a step-by-step process for selecting treatment facilities for new development and redevelopment projects.
- Chapter 2 presents treatment facility “menus” that are used in applying the step-by-step process presented in Chapter 1. These menus cover different treatment needs that are associated with different sites.
- Chapter 3 discusses general requirements for treatment facilities.
- Chapter 4 describes using a pretreatment facility to remove suspended solids prior to runoff treatment facilities.
- Chapter 5 through Chapter 9 provide detailed information regarding specific types of treatment facilities identified in the menus in Chapter 2.
- Chapter 10 discusses special considerations for emerging technologies for stormwater treatment.
- The appendices provide more detailed information on selected topics referenced in the preceding chapters.

Chapter 1 Treatment Facility Selection Process

This chapter describes a step-by-step process for selecting the type of treatment facilities that will apply to individual projects.

1.1 Step-by-Step Selection Process for Treatment Facilities

Use the step-by-step process outlined below to determine the type of treatment facilities applicable to the project.

Step 1. Determine the receiving waters and pollutants of concern

Step 2. Determine if oil treatment is required

Step 3. Determine if infiltration for pollutant removal is possible

Step 4. Determine if control of phosphorus is required

Step 5. Determine if enhanced treatment is required

Step 6. Determine if basic treatment is required

Step 7. Consider other factors that may influence the selection of a treatment facility

Step 8. Select an appropriate treatment facility or treatment train for each type of treatment required

Step 1: Determine the Receiving Waters and Pollutants of Concern Based on Offsite Analysis

The project proponent must determine the natural receiving water for the stormwater drainage from the project site (groundwater, wetland, lake, stream, or salt water). This is necessary to determine the applicable treatment menu from which to select treatment facilities. If the discharge is to the City of Auburn's municipal storm drainage system, the applicant must determine the final discharge point. Watershed specific requirements and/or specific protection areas are outlined in Chapter 2 of Volume V.

Step 2: Determine if an Oil Control Facility/Device is Required

Oil control is required for projects that have **high-use sites**. **High-use sites** are those that typically generate high concentrations of oil due to high traffic turnover or the frequent transfer of oil**. High-use sites** include:

- An area of a commercial or industrial site subject to an expected average daily traffic (ADT) count equal to or greater than 100 vehicles per 1,000 square feet of gross building area;
- An area of a commercial or industrial site subject to petroleum storage and transfer in excess of 1,500 gallons per year, not including routinely delivered heating oil;
- An area of a commercial or industrial site subject to parking, storage or maintenance of 25 or more motorized vehicles that are over 10 tons gross weight (trucks, buses, trains, heavy equipment, etc.);

- A road intersection with a measured ADT count of 25,000 vehicles or more on the main roadway and 15,000 vehicles or more on any intersecting roadway, excluding projects proposing primarily pedestrian or bicycle use improvements.

The traffic count can be estimated using information from "Trip Generation" published by the Institute of Transportation Engineers, or from a traffic study prepared by a professional engineer or transportation specialist with experience in traffic estimation.

The following urban land uses are likely to have areas that fall within the definition of "high-use sites" or have sufficient quantities of free oil present that can be treated by an API or CP-type oil/water separator:

- Industrial Machinery and Equipment, and Railroad Equipment Maintenance
- Log Storage and Sorting Yards
- Aircraft Maintenance Areas
- Railroad Yards
- Fueling Stations
- Vehicle Maintenance and Repair
- Construction Businesses (paving, heavy equipment storage and maintenance, storage of petroleum products)
- Any other sites that generate high concentrations of oil.

In general, all-day parking areas are not intended to be defined as **high-use sites**, and should not require oil control treatment outlined in Section 2.1. Gasoline stations, with or without small food stores, will likely exceed the high-use site threshold. The petroleum storage and transfer criterion is intended to address regular transfer operations such as gasoline service stations, not occasional filling of heating oil tanks.

Note: Some land use types require the use of a spill control (SC-type) oil/water separator. Those situations are described in IV and are separate from this oil treatment requirement.

Step 3: Determine if Infiltration for Pollutant Removal is Possible

Use Volume V, Chapter 5 as a guide to determine if the site contains soils that are conducive to infiltration. **For sites located in Groundwater Protection Area 2 (see Volume I, Chapter 2) this option is not allowed.**

Infiltration treatment facilities must be preceded by a pretreatment facility, such as a presettling basin or vault, to reduce the occurrence of plugging. Any of the basic treatment facilities, and detention ponds designed to meet flow control requirements, can also be used for pretreatment. If an oil/water separator is necessary for oil control, it can also function as the pre-settling basin as long as the influent suspended solids concentrations are not high. However, frequent inspections are necessary to determine when accumulated solids exceed the 6-inch depth at which clean-out is recommended.

Step 4: Determine if Phosphorus Treatment is Required

Step 5: Determine if Enhanced Treatment is Required

Enhanced treatment is required for the following project sites that discharge to fish-bearing streams, lakes, or to waters or conveyance systems tributary to fish-bearing streams or lakes:

- Industrial sites,
- Commercial sites,
- Multi-family sites, and
- High AADT roads as follows:
  - Fully controlled and partially controlled limited access highways with Annual Average Daily Traffic (AADT) counts of 15,000 or more
  - All other roads with an AADT of 7,500 or greater

Sites listed above that discharge directly (or, indirectly through a municipal storm sewer system) to Basic Treatment Receiving Waters, and portions of the above-listed project sites that are only subject to Basic Treatment requirements (see Step 6) are not required to provide enhanced treatment. For developments with a mix of land use types, the Enhanced Treatment requirement shall apply when the runoff from the areas subject to the Enhanced Treatment requirement comprises 50% or more of the total runoff within a threshold discharge area. Basic Treatment Receiving Waters within the City of Auburn include the Green River and the White River. Basic Treatment Receiving Waters identified by Ecology are listed in Appendix A.

If the project must apply Enhanced Treatment, select and apply an appropriate Enhanced Treatment facility. Please refer to the Enhanced Treatment Menu in Section 2.3. Select an option from the menu after reviewing the applicability and limitations, site suitability, and design criteria of each for compatibility with the site. You may also use Table V-1-1 for an initial screening of options.

Step 6: Select a Basic Treatment Facility

Basic treatment is required for all sites that meet the treatment thresholds of minimum requirement #6, see Volume I, Chapter 3.

Typical sites that require basic treatment include:

- Project sites that discharge to the ground, UNLESS:
  - The soil suitability criteria for infiltration treatment are met (see Volume III, Chapter 3), or
  - The project uses infiltration strictly for flow control – not treatment - and the discharge is within ¼ mile of a phosphorus sensitive lake (use the Phosphorus Treatment Menu) or within ¼ mile of a fish-bearing stream or lake (use the Enhanced Treatment Menu).
- Residential projects not otherwise needing phosphorus control as determined in Step 4.

- Project sites discharging directly to salt waters, river segments and lakes listed in Volume V, Appendix A.
- Project sites that drain to streams that are not fish-bearing, or to waters not tributary to fish-bearing streams.
- Landscaped areas of industrial, commercial, and multi-family project sites, and parking lots of industrial and commercial project sites, dedicated solely to parking of employees' private vehicles that do not involve any other pollution-generating sources (e.g., industrial activities, customer parking, and storage of erodible or leachable material, wastes, or chemicals). For developments with a mix of land use types, the Basic Treatment requirement shall apply when the runoff from the areas subject to the Basic Treatment requirement comprises 50% or more of the total runoff within a threshold discharge area.

Please refer to the Basic Treatment Menu in Section 2.4. Select an option from the menu after reviewing the applicability and limitations, site suitability, and design criteria of each for compatibility with the site.

Step 7: Consider Other Factors that May Influence the Selection of a Treatment Device

Base the selection of a treatment facility on site physical factors and pollutants of concern. Try to choose a facility that is more likely to do a better job removing the types of pollutants generated on the site regardless of treatment requirements. The types of site physical factors that influence facility selection are summarized below.

1. Pollutants of Concern

Consider the land uses and potential pollutants associated with that land use.

2. Soil Type (Table V-1-1)

The permeability of the soil underlying an infiltration treatment facility can influence effectiveness. This is particularly true for infiltration treatment facilities that are best sited in sandy to loamy sand soils. They are not generally appropriate for sites that have final infiltration rates (f) of less than 0.5 inches per hour. Wet pond facilities situated on coarser soils will need a synthetic liner or the soils will need to be amended to reduce the infiltration rate and provide treatment. Maintaining a permanent pool in the first cell is necessary to avoid resuspension of settled solids. Biofiltration swales in coarse soils can also be amended to reduce the infiltration rate.

3. High Sediment Input

High total suspended solids (TSS) loads can clog infiltration soil, sand filters, and coalescing plate oil/water separators. Pretreatment with a presettling basin, wet vault, or another basic treatment facility would typically be necessary.

Other Physical Factors

- ***Slope**:* Steep slopes restrict the use of several BMPs. For example, biofiltration swales are usually situated on sites with slopes of less than 6%, although greater slopes can be considered. Infiltration BMPs are not suitable when the slope exceeds 20%.
- ***High Water Table**:* Unless there is sufficient horizontal hydraulic receptor capacity the water table acts as an effective barrier to exfiltration and can sharply reduce the efficiency of an infiltration system. If the high water table extends to within five (5) feet of the bottom of an infiltration BMP, the site is seldom suitable.
- ***Depth to Bedrock/ Hardpan/Till**:* The downward exfiltration of stormwater is also impeded if a bedrock or till layer lies too close to the surface. If the impervious layer lies within five feet below the bottom of the infiltration BMP the site is not suitable. Similarly, pond BMPs are often not feasible if bedrock lies within the area that must be excavated.
- ***Proximity to Foundations and Wells**:* Since infiltration BMPs convey runoff back into the soil, some sites may experience problems with local seepage. This can be a real problem if the BMP is located too close to a building foundation. Another risk is groundwater pollution; hence the requirement to site infiltration systems more than 100 feet away from drinking water wells.
- ***Maximum Depth**:* Wet ponds are also subject to a maximum depth limit for the "permanent pool" volume. Deep ponds (greater than 8 feet) may stratify during summer and create low oxygen conditions near the bottom resulting in re-release of phosphorus and other pollutants back into the water.

Step 8: Select an Appropriate Treatment Device

Refer to the treatment facility menus in Chapter 2 for treatment facility options. Use Table V-1-1 as an aid in determining which treatment device is most appropriate for the site.

Table V-1-1. Screening Treatment Facilities Based on Soil Type

Soil Type	Infiltration	Wet Pond*	Biofiltration* (Swale or Filter Strip)
Coarse Sand or Cobbles	N	N	N
Sand	Y	N	N
Loamy Sand	Y	N	Y
Sandy Loam	Y	N	Y
Loam	N	N	Y
Silt Loam	N	N	Y
Sandy Clay Loam	N	Y	Y
Silty Clay Loam	N	Y	Y
Sandy Clay	N	Y	Y
Silty Clay	N	Y	N
Clay	N	Y	N

Y Indicates that use of the technology is generally appropriate for this soil type.

N Indicates that use of the technology is generally not appropriate for this soil type

* Coarser soils may be used for these facilities if a liner is installed to prevent infiltration, or if the soils are amended to reduce the infiltration rate.
Sand filtration is not listed because its feasibility is not dependent on soil type.

Chapter 2 Treatment Facility Menus

This chapter identifies the treatment facility menus. The menus in this chapter are as follows:

- Oil Control Menu, Section 2.1
- Phosphorus Treatment Menu, Section 2.2
- Enhanced Treatment Menu, Section 2.3
- Basic Treatment Menu, Section 2.4

Performance goals apply to the water quality design storm volume or flowrate, whichever is applicable, and apply on an average annual basis to the entire annual discharge volume (treated plus bypassed). The incremental portion of runoff in excess of water quality design flowrate can be routed around the facility (off-line treatment facilities) or can be passed through the facility untreated (on-line treatment facilities) provided a net pollutant reduction is maintained. All performance goals apply to stormwater typically found in Pacific Northwest maritime climates, where long duration, low intensity storms predominate and stormwater contains mostly silt-sized particles.

2.1 Oil Control Menu

This menu is applicable in addition to facilities required by other treatment menus.

2.1.1 Performance Goal

The oil control menu facility options should achieve the goals of no ongoing or recurring visible sheen, and to have a 24-hour average Total Petroleum Hydrocarbon (TPH) concentration no greater than 10 mg/l, and a maximum of 15 mg/l for a discrete sample (grab sample).

2.1.2 Options

Oil control options include facilities that are small, treat runoff from a limited area, and require frequent maintenance as well as facilities that treat runoff from larger areas and generally require less frequent maintenance.

- **API-Type Oil/Water Separator** – See Chapter 9
- **Coalescing Plate Oil/Water Separator** – See Chapter 9
- **Linear Sand Filter** – See Chapter 6

  The linear sand filter is used in the Basic, Enhanced, and Phosphorus Treatment menus also. If used to satisfy one of those treatment requirements, the same facility shall not also be used to satisfy the oil control requirement unless enhanced maintenance is assured. This is to prevent clogging of the filter by oil so that it will function for suspended solids and other pollutant removal as well. Quarterly cleaning is required when used as a combination facility.

- **Emerging Stormwater Treatment Technologies for Oil Treatment –** See Chapter 10

2.1.3 Application on the Project Site

Place oil control facilities upstream of other facilities, as close to the source of oil generation as practical. For high-use sites located within a larger commercial center, only the impervious surface associated with the high-use portion of the site is subject to oil treatment requirements. If common parking for multiple businesses is provided, treatment shall be applied to the number of parking stalls required for the high-use business only. If the treatment collection area also receives runoff from other areas, the treatment facility must be sized to treat all water passing through it.

High-use roadway intersections shall treat lanes where vehicles accumulate during the traffic signal cycle, including left and right turn lanes and through lanes, from the beginning of the left turn pocket. If no left turn pocket exists, the treatable area shall begin at a distance equal to three car lengths from the stop line. If runoff from the intersection drains to more than two collection areas that do not combine within the intersection, treatment may be limited to any two of the collection areas.

2.2 Phosphorus Treatment Menu

2.2.1 Performance Goal

The phosphorus menu facility choices should achieve a goal of 50% total phosphorus removal for a range of influent concentrations between 0.1 – 0.5 mg/l. The phosphorus menu facility choices must achieve basic treatment goals in addition to phosphorus.

2.2.2 Options

Any one of the following options may be chosen to satisfy the phosphorus treatment requirement.

- **Infiltration with appropriate pretreatment** – See Chapter 4 and Chapter 5
  - ***Infiltration Treatment*** - If infiltration is through soils meeting the minimum site suitability criteria for infiltration treatment (see Chapter 5), a presettling basin or a basic treatment facility can serve for pretreatment.
  - ***Infiltration Proceeded by Basic Treatment*** - If infiltration is through soils that do not meet the soil suitability criteria for infiltration treatment, treatment must be provided by a basic treatment facility unless the soil and site fit the description in the next option below.
  - ***Infiltration Preceded by Phosphorus Treatment*** - If the soils do not meet the soil suitability criteria **and** the infiltration site is within ¼ mile of a phosphorus-sensitive receiving water, or a tributary to that water, treatment must be provided by one of the other treatment facility options listed below.
- **Large Sand Filter** – See Chapter 6
- **Large Wetpond** – See Chapter 8
- **Emerging Stormwater Treatment Technologies for Phosphorus Treatment** – See Chapter 10

- **Two-Facility Treatment Trains** – See Table V-2-2.

Table V-2-2. Treatment Trains for Phosphorus Removal

First Basic Treatment Facility	Second Treatment Facility
Biofiltration Swale	Basic Sand Filter or Sand Filter Vault
Filter Strip	Linear Sand Filter (no presettling needed)
Linear Sand Filter	Filter Strip
Basic Wetpond	Basic Sand Filter or Sand Filter Vault
Wetvault	Basic Sand Filter or Sand Filter Vault
Stormwater Treatment Wetland	Basic Sand Filter or Sand Filter Vault
Basic Combined Detention and Wetpool	Basic Sand Filter or Sand Filter Vault

2.3 Enhanced Treatment Menu

2.3.1 Performance Goal

The enhanced treatment facility choices should provide a higher rate of removal of dissolved metals than basic treatment facilities. The performance goal assumes that the facility is treating stormwater with influent dissolved copper ranging from 0.003 to 0.02 mg/l, and dissolved zinc ranging from 0.02 to 0.3 mg/l. Enhanced treatment facilities must achieve basic treatment goals in addition to enhanced treatment goals.

2.3.2 Options

Any one of the following options may be chosen to satisfy the enhanced treatment requirement:

- **Infiltration with appropriate pretreatment** – See Chapter 4 and Chapter 5
  - ***Infiltration Treatment*** - If infiltration is through soils meeting the minimum site suitability criteria for infiltration treatment (see Chapter 5), a presettling basin or a basic treatment facility can serve for pretreatment.
  - ***Infiltration Proceeded by Basic Treatment*** - If infiltration is through soils that do not meet the soil suitability criteria for infiltration treatment, treatment must be provided by a basic treatment facility unless the soil and site fit the description in the next option below.
  - ***Infiltration Preceded by Enhanced Treatment*** - If the soils do not meet the soil suitability criteria **and** the infiltration site is within ¼ mile of a fish-bearing stream or a tributary to a fish-bearing stream treatment must be provided by one of the other treatment facility options listed below.
- **Large Sand Filter** – See Chapter 6
- **Stormwater Treatment Wetland** – See Chapter 8
- **Two Facility Treatment Trains** – See Table V-2-3

- **Compost-Amended Filter** – See Chapter 7
- **Bioretention/rain garden** – See Volume VI

  NOTE: Where bioretention/rain gardens are intended to fully meet treatment requirements, they must be designed, using an approved continuous runoff model, to infiltrate 91% of the influent runoff volume.

- **Emerging Stormwater Treatment Technologies for Enhanced Treatment** – See Chapter 10

Table V-2-3. Treatment Trains for Enhanced Treatment

First Basic Treatment Facility	Second Treatment Facility
Biofiltration Swale	Basic Sand Filter or Sand Filter Vault or Media Filter[1]
Filter Strip	Linear Sand Filter with no pre-settling cell needed
Linear Sand Filter	Filter Strip
Basic Wetpond	Basic Sand Filter or Sand Filter Vault or Media Filter[1]
Wetvault	Basic Sand Filter or Sand Filter Vault or Media Filter[1]
Basic Combined Detention/Wetpool	Basic Sand Filter or Sand Filter Vault or Media Filter[1]
Basic Sand Filter or Sand Filter Vault with a presettling cell if the filter isn't preceded by a detention facility	Media Filter[1]

[1] The media must be of a type approved for use by Ecology. Refer to Ecology's website.

2.4 Basic Treatment Menu

2.4.1 Performance Goal

The basic treatment menu facility options should achieve 80% removal of total suspended solids (TSS) for influent concentrations ranging from 100 to 200 mg/L. For influent concentrations greater than 200 mg/l, a higher treatment goal is appropriate. For influent concentrations less than 100 mg/l, the facilities should achieve an effluent goal of 20 mg/l total suspended solids.

2.4.2 Options

Any one of the following options may be chosen to satisfy the basic treatment requirement:

- **Bio-infiltration Swale** – See Chapter 5
- **Infiltration** – See Chapter 5
- **Sand Filters** – See Chapter 6
- **Biofiltration Swales** – See Chapter 7
- **Filter Strips** – See Chapter 7
- **Basic Wetpond** – See Chapter 8
- **Wetvault** – See Chapter 8

  A wetvault may be used for commercial, industrial, or road projects if there are space limitations. The use of wetvaults is discouraged for residential projects. Combined detention/wetvaults are allowed (see Section 8.3).

- **Stormwater Treatment Wetland** – See Chapter 8
- **Combined Detention and Wetpool Facilities** – See Chapter 8
- **Bioretention/Rain Garden** – See Volume VI
- **Emerging Stormwater Treatment Technologies for Basic Treatment** – See Chapter 10

Chapter 3 General Requirements for Stormwater Facilities

This chapter addresses general requirements for treatment facilities. Requirements discussed in this chapter include design volumes and flows, sequencing of facilities, liners, and hydraulic structures for splitting or dispersing flows.

- All open detention and retention ponds shall be appropriately and aesthetically located, designed, and planted. Pre-approval of the design concept, including landscaping, is required for all proposed public ponds. Joint use facilities incorporating recreation or open space opportunities are encouraged.
- All storm facility landscape planting and seeding plans shall be prepared and sealed by a Washington State licensed professional Landscape Architect or similar specialist approved by the City of Auburn.
- Water quality systems shall be designed for simplicity and ease of maintenance.
- Treatment systems shall be designed such that storm drainage from public streets does not discharge into areas of private ownership or private maintenance responsibility unless a hold-harmless and cross drainage agreement has been secured.
- The City prefers retention (infiltration) for storm drainage quantity control when soil conditions are satisfactory for such application and water quality treatment can be provided.

3.1 Design Flow Volume and Flow Rate

3.1.1 Water Quality Design Flow Volume

The volume of runoff predicted from a 24-hour storm with a 6-month return frequency (a.k.a., 6-month, 24-hour storm) obtained from an approved single event model. The 6-month, 24-hour design storm of 1.44 inches shall be used in the City of Auburn.

Alternatively, the 91st percentile, 24-hour runoff volume indicated by the Western Washington Hydrology Model (WWHM) will be used to determine the water quality design flow volume.

Treatment facility sizes are the same whether they precede, follow or are incorporated (i.e., combined detention and wetpool facilities) into the detention facility.

Treatment options that can be sized by this method include:

- Wetponds
- Wetvaults
- Stormwater Wetlands
- Combined Detention and Wetpool Facilities

3.1.1 Water Quality Design Flow Rate

A. Preceding Detention Facilities or when Detention Facilities are not required: The flow rate at or below which 91% of the runoff volume, as estimated by WWHM, will be treated

- All BMPs except wetpool type facilities (Chapter 8) shall use the 15-minute time series from WWHM. Design criteria for treatment facilities are assigned to achieve the applicable performance goal (e.g., 80 percent TSS removal) at the water quality design flow rate.

- ***Off-line facilities***: For treatment facilities not preceded by an equalization or storage basin, and when runoff flow rates exceed the water quality design flow rate, the treatment facility shall continue to receive and treat the water quality design flow rate to the applicable treatment performance goal. The incremental portion of runoff in excess of the water quality design flowrate can be routed around the facility.

  Treatment facilities preceded by an equalization or storage basin may identify a lower water quality design flow rate provided that at least 91 percent of the estimated runoff volume in the time series of an approved continuous runoff model is treated to the applicable performance goals (e.g., 80 percent TSS removal at the water quality design flow rate and 80 percent TSS removal on an annual average basis).

- ***On-line facilities*:** Runoff flow rates in excess of the water quality design flow rate can be routed through the facility provided a net pollutant reduction is maintained, and the applicable annual average performance goal is met.

B. Downstream of Detention Facilities: The full 2-year release rate from the detention facility

- An approved continuous runoff model shall identify the 2-year return frequency flow rate discharged by a detention facility that is designed to meet the flow duration standard.

- Treatment facilities downstream of detention can be designed on-line or off-line. For off-line facilities, the entire water quality design flow volume/rate must be treated. Only flows in excess of the design flow may be bypassed.

3.1.2 Flows Requiring Treatment

Runoff from pollution-generating impervious or pervious surfaces exceeding the thresholds outlined in Minimum Requirement #6 (Volume I, Chapter 3) must be treated using the water quality facilities in this volume. If runoff from non-pollution generating surfaces reaches a runoff treatment BMP, flows from those areas must be included in the sizing calculations for the facility. Once runoff from non-pollution generating areas is mixed with runoff from pollution-generating areas, it cannot be separated before treatment.

The following are some examples of surfaces that are required to provide treatment if threshold limits for treatment are met:

- Runoff from pollution-generating impervious surfaces (e.g. roads (paved or unpaved), driveways, parking lots, storage yards, bike lanes within the roadway, unvegetated road shoulders, etc.)
- Runoff from any pervious or non-impervious surface subject to the use of pesticides and fertilizers or soil loss.
- Runoff from pervious parking areas.
- Runoff from metal roofs unless they are coated with an inert non-leachable material.

3.2 Sequence of Facilities

Treatment facilities can be placed in a variety of configurations. Some are required to be upstream from detention facilities while others may perform better if located downstream. Detention facilities can act as settling basins and therefore can reduce the load going to a treatment facility. Additionally, treatment facilities can be sequenced together to provide a higher level of treatment that could be achieved by a single facility. For instance, the enhanced treatment and phosphorus removal menus, described in Chapter 2, include treatment options in which more than one type of treatment facility is used, for these treatment trains the sequencing is prescribed.

Table V-3-4 summarizes placement considerations of treatment facilities in relation to detention facilities.

Table V-3-4. Treatment Facility Placement in Relation to Detention Facilities

Water Quality Facility	Preceding Detention	Following Detention
Basic biofiltration swale (Chapter 7)	OK	OK. Prolonged flows may reduce grass survival. Consider wet biofiltration swale
Wet biofiltration swale (Chapter 7)	OK	OK
Filter strip (Chapter 7)	OK	No—must be installed before flows concentrate.
Basic or large wetpond (Chapter 8)	OK	OK—less water level fluctuation in ponds downstream of detention may improve aesthetic qualities and performance.
Wetvault (Chapter 8)	OK	OK
Basic or large sand filter or sand filter vault (Chapter 6)	OK, but presettling and control of floatables needed	OK—sand filters downstream of detention facilities may require field adjustments if prolonged flows cause sand saturation and interfere with phosphorus removal.
Stormwater treatment wetland/pond (Chapter 8)	OK	OK—less water level fluctuation and better plant diversity are possible if the stormwater wetland is located downstream of the detention facility.

3.3 Setbacks, Slopes, and Embankments

The following guidelines for setbacks, slopes, and embankments are intended to provide for adequate maintenance accessibility to runoff treatment facilities. Setback requirements may also be specified by Auburn City Code, Uniform Building Code requirements, or other state regulations.

3.3.1 Setbacks

The City requires specific setbacks for sites with steep slopes, landslide areas, open water features, springs, wells, and septic tank drain fields. Setbacks from tract lines are necessary for maintenance access and equipment maneuverability. Adequate room for maintenance equipment shall also be considered during site design. Project proponents should consult the Auburn City Codes to determine all applicable setback requirements. Where a conflict between setbacks occurs, the City shall require compliance with the most stringent of the setback requirements from the various codes/regulations. Required setbacks are as follows or as determined by a qualified geotechnical engineer:

- Minimum spacing between trenches shall be 4 feet measured from the edge of trench.
- Stormwater infiltration facilities, unlined wetponds and detention ponds shall be set back at least 100 feet from open water features, drinking water wells, septic tanks or drainfields, and

springs used for public drinking water supplies. Infiltration facilities, unlined wetponds and detention ponds upgradient of drinking water supplies and within 1, 5, and 10-year time of travel zones must comply with Health Department requirements (Washington Wellhead Protection Program, DOH, 12/93).

- All systems shall be at least 10 feet from any structure. If necessary, setbacks shall be increased from the minimum 10 feet in order to maintain a 1:1 side slope for future excavation and maintenance

- All systems shall be placed at least 5 feet from any property line. If necessary, setbacks shall be increased from the minimum 5 feet in order to maintain a 1:1 side slope for future excavation and maintenance.

- All facilities shall be setback from sensitive areas, steep slopes, landslide hazard areas, and erosion hazard areas as governed by the Auburn City Code. Runoff discharged near landslide hazard areas must be evaluated by a geotechnical engineer or qualified geologist. The discharge point shall not be placed on or above slopes greater than 20% or above erosion hazard areas without evaluation by a geotechnical engineer or qualified geologist and City approval.

- For sites with septic systems, infiltration systems, unlined wetponds and detention ponds shall be downgradient of the drainfield unless the site topography clearly prohibits subsurface flows from intersecting the drainfield.

- Infiltration system shall be set back from sensitive areas, steep slopes, landslide hazard areas, and erosion hazard areas as governed by the Auburn City Code. Runoff discharged near landslide hazard areas must be evaluated by a geotechnical by a geotechnical engineer or qualified geologist. The discharge point shall not be placed on or above slopes greater than 20% (5H:1V) or above erosion hazard areas without evaluation by a geotechnical engineer or qualified geologist and City approval.

Additional setbacks for specific stormwater facilities will be noted in the appropriate section.

3.3.2 Side Slopes and Embankments

- Side slopes shall not exceed a slope of 3H:1V. Moderately undulating slopes are acceptable and can provide a more natural setting for the facility. In general, gentle side slopes improve the aesthetic attributes of the facility and enhance safety.

- Interior side slopes may be retaining walls if the design is prepared and stamped by a licensed civil engineer. A fence shall be provided along the top of the wall.

- Maintenance access shall be provided through an access ramp or other adequate means (see Volume III, Chapter 2, Section 2.3.1).

- Embankments that impound water must comply with the Washington State Dam Safety Regulations (Chapter 173-175 WAC). See Volume III, Chapter 3 for more detail concerning Detention Ponds.

3.4 Facility Liners

Liners are intended to reduce the likelihood that pollutants in stormwater will reach groundwater. Where necessary, a liner is incorporated into the base of the treatment facility as the facility is constructed. In addition to groundwater protection considerations, some facility types require permanent water for proper functioning. An example is the first cell of a wetpond.

3.4.1 General Design Criteria

- Table V-3-5 shows recommendations for the type of liner generally best suited for use with various runoff treatment facilities.

- Liners shall be evenly placed over the bottom and/or sides of the treatment area of the facility as indicated in Table V-3-5. Areas above the treatment volume that are required to pass flows greater than the water quality treatment flow (or volume) need not be lined. However, the lining must be extended to the top of the interior side slope and anchored if it cannot be permanently secured by other means.

- For low permeability liners, the following criteria apply:

    - Where the seasonal high groundwater elevation is likely to contact a low permeability liner, liner buoyancy may be a concern. A low permeability liner shall not be used in this situation unless evaluated and recommended by a geotechnical engineer.

    - Where grass must be planted over a low permeability liner per the facility design, a minimum of 6 inches of good topsoil or compost-amended native soil (2 inches compost tilled into 6 inches of native till soil) must be placed over the liner in the area to be planted. Twelve inches of cover is preferred.

- Check all liners for buoyancy stability and include calculations in project documentation. Provide anchors as needed.

- If a treatment liner will be below the seasonal high water level, the pollutant removal performance of the liner must be evaluated by a geotechnical or groundwater specialist and found to be as protective as if the liner were above the level of the groundwater.

Table V-3-5. Lining Types Recommended for Runoff Treatment Facilities

WQ Facility	Area to be Lined	Type of Liner Recommended
Presettling basin	Bottom and sides	Low permeability liner or Treatment liner (If the basin will intercept the seasonal high groundwater table, a treatment liner is recommended.)
Wetpond	First cell: bottom and sides to WQ design water surface ---------- Second cell: bottom and sides to WQ design water surface	Low permeability liner or Treatment liner (If the wet pond will intercept the seasonal high groundwater table, a treatment liner is recommended.) ---------- Treatment liner
Combined detention/WQ facility	First cell: bottom and sides to WQ design water surface ---------- Second cell: bottom and sides to WQ design water surface	Low permeability liner or treatment liner (If the facility will intercept the seasonal high groundwater table a treatment liner is recommended.) ---------- Treatment liner
Stormwater wetland	Bottom and sides, both cells	Low permeability liner (If the facility will intercept the seasonal high groundwater table, a treatment liner is recommended.)
Sand filtration basin	Basin sides only	Treatment liner
Sand filter vault	Not applicable	No liner needed
Linear sand filter	Not applicable if in vault Bottom and sides of presettling cell if not in vault	No liner needed Low permeability or treatment liner
Media filter (in vault)	Not applicable	No liner needed
Wet vault	Not applicable	No liner needed

3.4.2 Design Criteria for Treatment Liners

- A two-foot thick layer of soil with a minimum organic content of 5% and a minimum cation exchange capacity (CEC) of 5 milliequivalents/100 grams can be used as a treatment layer beneath a water quality or detention facility.

- To demonstrate that in-place soils meet the above criteria, one sample per 1,000 square feet of facility area shall be tested. Each sample shall be a composite of subsamples taken throughout the depth of the treatment layer (usually two to six feet below the expected facility invert).

- Typically, side wall seepage is not a concern if the seepage flows through the same stratum as the bottom of the treatment BMP. However, if the treatment soil is an engineered soil or has very low permeability, the potential to bypass the treatment soil through the side walls may be significant. In those cases, the treatment BMP side walls may be lined with at least 18 inches of treatment soil, as described above, to prevent untreated seepage. This lesser soil thickness is based on unsaturated flow as a result of alternating wet-dry periods.

- Organic content shall be measured on a dry weight basis using ASTM D2974.

- Cation exchange capacity (CEC) shall be tested using EPA laboratory method 9081.

- Certification by a soils testing laboratory that imported soil meets the organic content and CEC criteria above shall be provided to the City of Auburn.

- Animal manures used in treatment soil layers must be sterilized because of potential for bacterial contamination of the groundwater.

3.4.3 Design Criteria for Low Permeability Liner Options

This section presents the design criteria for each of the following four low permeability liner options: compacted till liners, clay liners, geomembrane liners, and concrete liners.

3.4.3.1 Compacted Till Liners

- Liner thickness shall be 18 inches after compaction.

- Soil shall be compacted to 95% minimum dry density, modified proctor method (ASTM D-1557).

- A different depth and density sufficient to retard the infiltration rate to 2.4×10^{-5} inches per minute (1×10^{-6} cm/s) may also be used instead of the above criteria.

- Soil shall be placed in 6-inch lifts.

- Reference Table V-3-6 for Acceptable Gradation for Compacted Till Liners.

Table V-3-6. Acceptable Gradation for Compacted Till Liners

Sieve Size	Percent Passing
6-inch	100
4-inch	90
#4	70 - 100
#200	**20**

3.4.3.2 Clay Liners

- Liner thickness shall be 12 inches.
- Clay shall be compacted to 95% minimum dry density, modified proctor method (ASTM D-1557).
- A different depth and density sufficient to retard the infiltration rate to 2.4 x 10^{-5} inches per minute (1 x 10^{-6} cm/s) may also be used instead of the above criteria.
- The slope of clay liners must be restricted to 3H: IV for all areas requiring soil cover; otherwise, the soil layer must be stabilized by another method so that soil slippage into the facility does not occur. Any alternative soil stabilization method must take maintenance access into consideration.
- Where clay liners form the sides of ponds, the interior side slope shall not be steeper than 3H:1V, irrespective of fencing.

3.4.3.3 Geomembrane Liners

- Geomembrane liners shall be ultraviolet (UV) light resistant and have a minimum thickness of 30 mils. A thickness of 40 mils shall be used in areas of maintenance access or where heavy machinery must be operated over the membrane.
- Geomembranes shall be bedded according to the manufacturer's recommendations.
- Liners shall be installed so that they can be covered with 12 inches of top dressing forming the bottom and sides of the water quality facility, except for liner sand filters. Top dressing shall consist of 6 inches of crushed rock covered with 6 inches of native soil. The rock layer is to mark the location of the liner for future maintenance operations. As an alternative to crushed rock, 12 inches of native soil may be used if orange plastic “safety fencing” or another highly-visible, continuous marker is embedded 6 inches above the membrane.
- If possible, liners should be of a contrasting color so that maintenance workers are aware of any areas where a liner may have become exposed when maintaining the facility.
- Geomembrane liners shall not be used on slopes steeper than 5H:1V to prevent the top dressing material from slipping. Textured liners may be used on slopes up to 3H:1V upon recommendation by a geotechnical engineer that the top dressing will be stable for all site conditions, including maintenance.

3.4.3.4 Concrete Liners

- Portland cement liners are allowed irrespective of facility size, and shotcrete may be used on slopes. However, specifications must be developed by a professional engineer who certifies the liner against cracking or losing water retention ability under expected conditions of operation, including facility maintenance operations. Weight of maintenance equipment can be up to 80,000 pounds when fully loaded.
- Asphalt concrete may not be used for liners due to its permeability to many organic pollutants.
- If grass is to be grown over a concrete liner, slopes must be no steeper than 5H:1V to prevent the top dressing material from slipping.

3.5 Hydraulic Structures

3.5.1 Flow Splitter Designs

3.5.1.1 General Design Criteria

- A flow splitter must be designed to deliver the WQ design flow rate specified in this volume to the WQ treatment facility.
- The top of the weir must be located at the water surface for the design flow. Remaining flows enter the bypass line. Flows modeled using a WWHM shall use 15-minute time steps, if available. Otherwise use 1-hour time steps.
- The maximum head must be minimized for flow in excess of the WQ design flow. Specifically, flow to the WQ facility at the 100-year water surface must not increase the design WQ flow by more than 10%.
- Design as shown in Figure V-3-1 or Figure V-3-2 or provide an equivalent design.
- As an alternative to using a solid top plate in Figure V-3-2, a full tee section may be used with the top of the tee at the 100-year water surface. This alternative would route emergency overflows (if the overflow pipe were plugged) through the WQ facility rather than back up from the manhole.
- Special applications, such as roads, may require the use of a modified flow splitter. The baffle wall may be fitted with a notch and adjustable weir plate to proportion runoff volumes other than high flows.
- For ponding facilities, backwater effects must be considered in determining the height of the standpipe in the manhole.
- Ladder or step and handhold access must be provided. If the weir wall is higher than 36 inches, two ladders, one to either side of the wall, must be used.

3.5.1.2 Materials

- The splitter baffle may be installed in a Type 2 manhole or vault.

- The baffle wall must be made of reinforced concrete or another suitable material resistant to corrosion, and have a minimum 4-inch thickness. The minimum clearance between the top of the baffle wall and the bottom of the manhole cover must be 4 feet; otherwise, dual access points shall be provided.
- All metal parts must be corrosion resistant. Examples of preferred materials include aluminum, stainless steel, and plastic. Zinc and galvanized materials are prohibited unless coated as approved by the City. Painted metal parts shall not be used because of poor longevity.

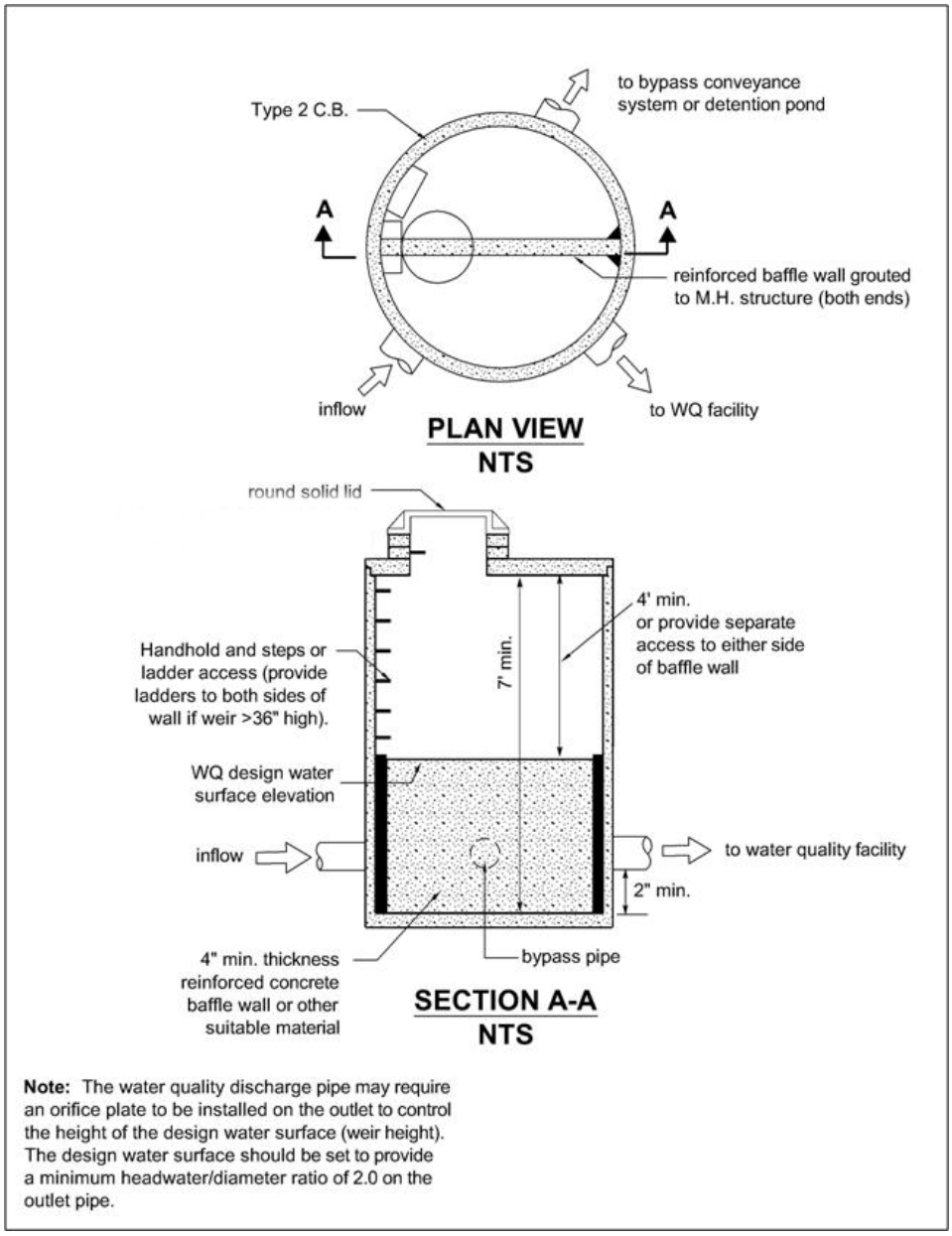

Figure V-3-1. Flow Splitter, Option A

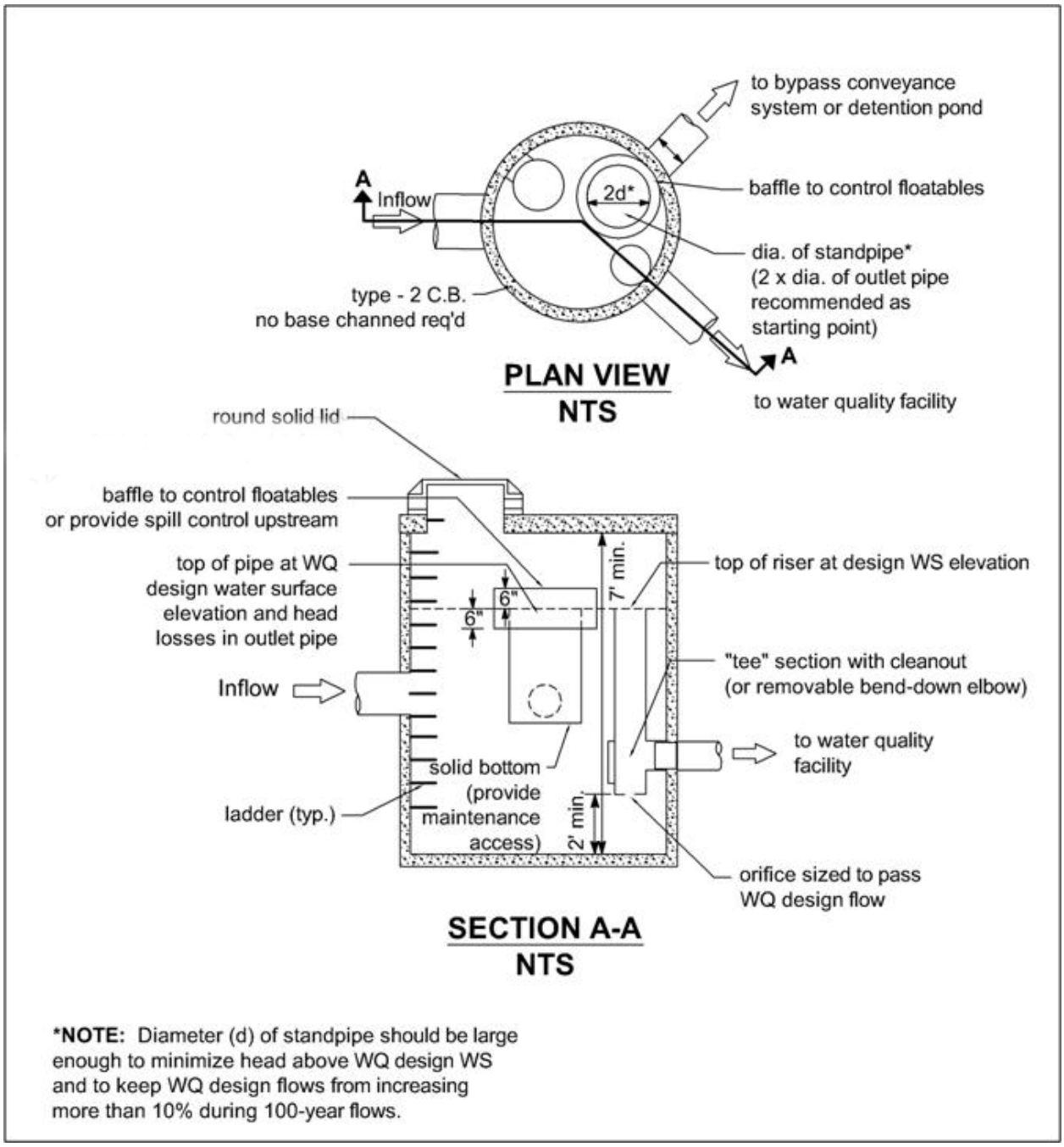

Figure V-3-2. Flow Splitter, Option B

3.5.2 Flow Spreading Options

Flow spreaders function to uniformly spread flows across the inflow portion of water quality facilities (e.g., sand filter, biofiltration swale, or filter strip). There are five flow spreader options presented in this section:

- Option A – Anchored plate (Figure V-3-3)
- Option B – Concrete sump box (Figure V-3-4)
- Option C – Notched curb spreader (Figure V-3-5)
- Option D – Through-curb ports (Figure V-3-6)
- Option E – Interrupted curb

Options A through C can be used for spreading flows that are concentrated. Any one of these options can be used when spreading is required by the facility design criteria. Options A through C can also be used for unconcentrated flows, and in some cases must be used, such as to correct for moderate grade changes along a filter strip.

Options D and E are only for flows that are already unconcentrated and enter a filter strip or continuous inflow biofiltration swale. Other flow spreader options may be allowed with written approval from The City.

3.5.2.1 General Design Criteria

- Where flow enters the flow spreader through a pipe, it is recommended that the pipe be submerged to the extent practical to dissipate as much energy as possible.
- For higher inflows (greater than 5 cfs for the 100-yr storm), a Type 1 catch basin shall be positioned in the spreader and the inflow pipe shall enter the catch basin with flows exiting through the top grate. The top of the grate shall be lower than the level spreader plate, or if a notched spreader is used, lower than the bottom of the v-notches.

Option A -- Anchored Plate

- An anchored plate flow spreader must be preceded by a sump having a minimum depth of 8 inches and minimum width of 24 inches. If not otherwise stabilized, the sump area must be lined to reduce erosion and to provide energy dissipation.
- The top surface of the flow spreader plate must be level, projecting a minimum of 2 inches above the ground surface of the water quality facility, or V-notched with notches 6 to 10 inches on center and 1 to 6 inches deep (use shallower notches with closer spacing). Alternative designs may also be used if approved by the City.
- A flow spreader plate must extend horizontally beyond the bottom width of the facility to prevent water from eroding the side slope. The horizontal extent shall be such that the bank is protected for all flows up to the 100-year flow or the maximum flow that will enter the Water Quality (WQ) facility.
- Flow spreader plates must be securely fixed in place.

- Flow spreader plates may be made of either wood, metal, fiberglass reinforced plastic, or other durable material. If wood, pressure treated 4 by 10-inch lumber or landscape timbers are acceptable.
- Anchor posts must be 4-inch square concrete, tubular stainless steel, or other material resistant to decay.

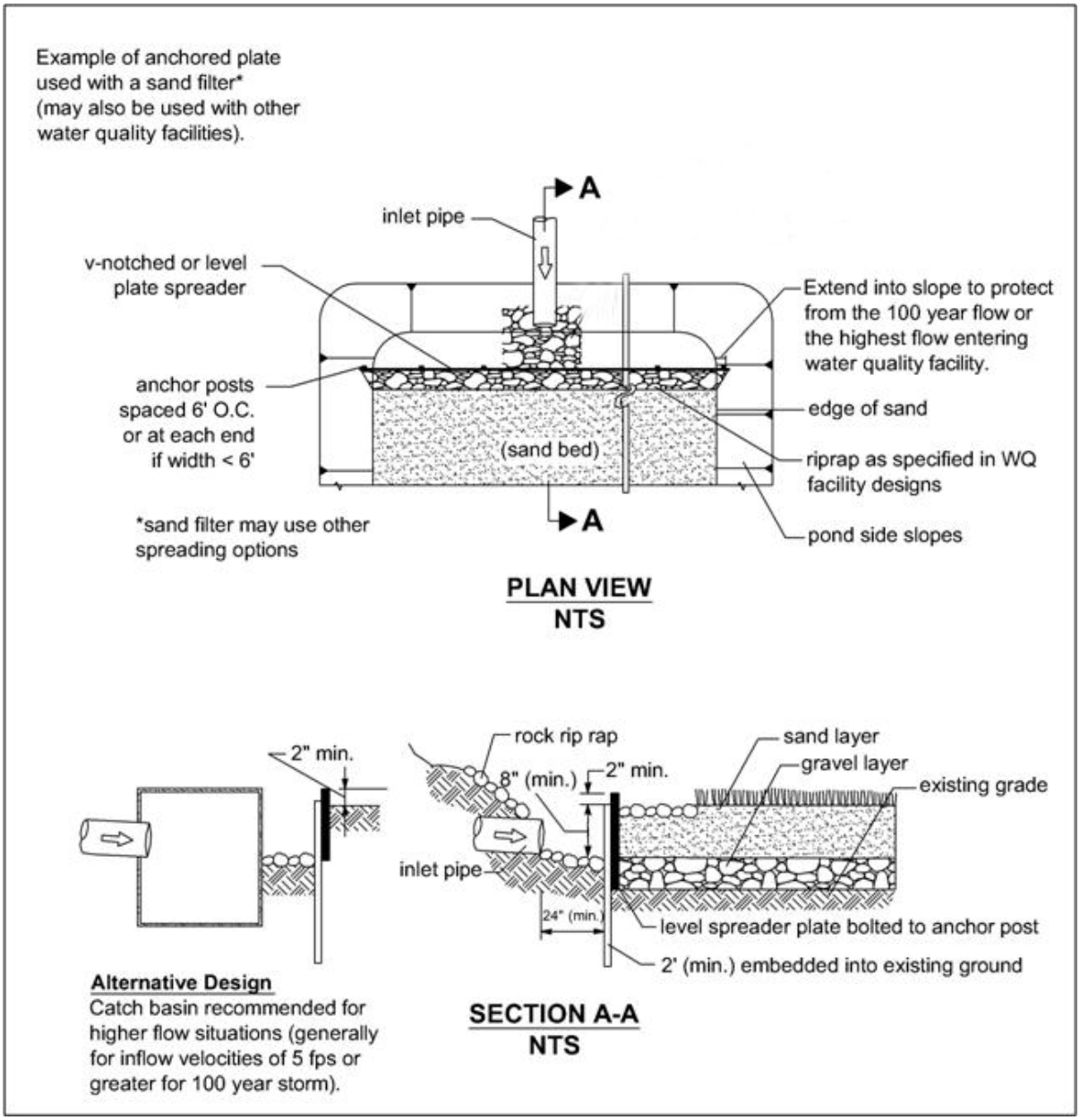

Figure V-3-3. Flow Spreader Option A – Anchored Plate

Option B -- Concrete Sump Box

- The wall of the downstream side of a rectangular concrete sump box must extend a minimum of 2 inches above the treatment bed. This serves as a weir to spread the flows uniformly across the bed.
- The downstream wall of a sump box must have “wing walls” at both ends. Side walls and returns must be slightly higher than the weir so that erosion of the side slope is minimized.
- Concrete for a sump box can be either cast-in-place or precast, but the bottom of the sump must be reinforced with wire mesh for cast-in-place sumps.
- Sump boxes must be placed over bases that consists of 4 inches of crushed rock, 5/8-inch minus to help assure the sump remains level.

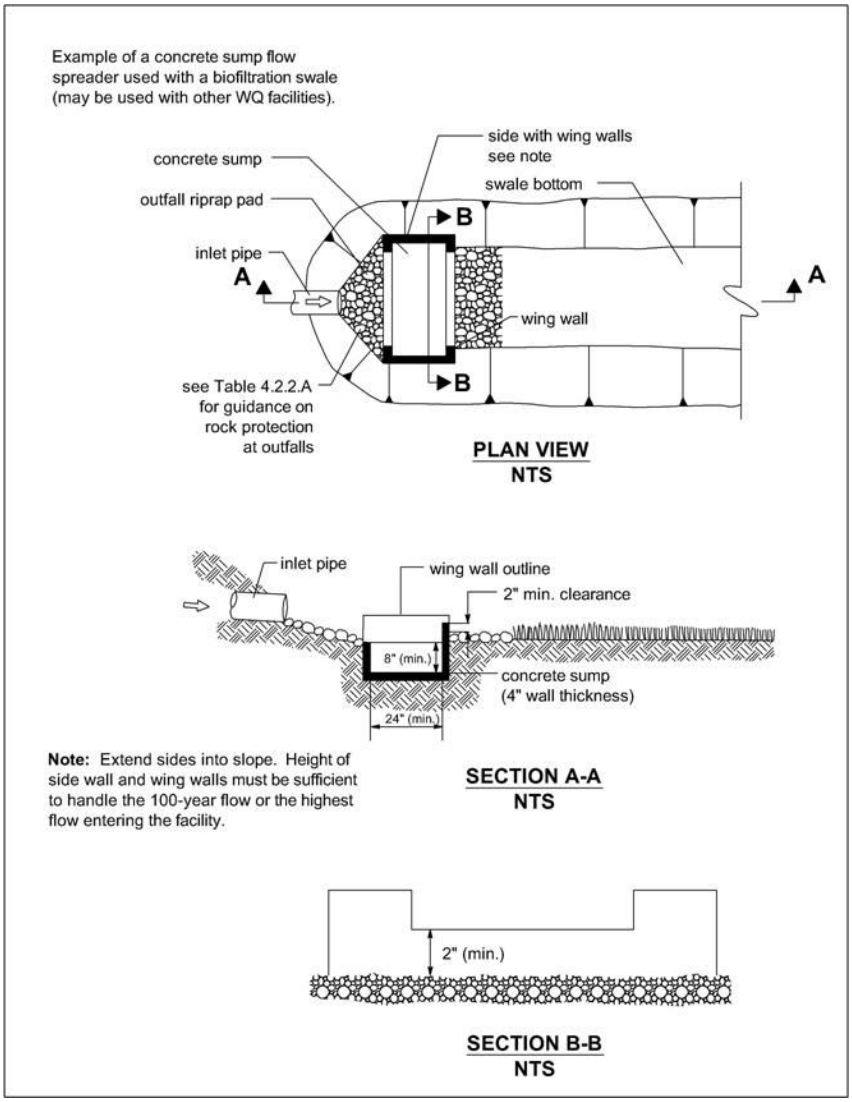

Figure V-3-4. Flow Spreader Option B – Concrete Sump Box

Option C -- Notched Curb Spreader

Notched curb spreader sections must be made of extruded concrete laid side-by-side and level. Typically five "teeth" per four-foot section provide good spacing. The space between adjacent "teeth" forms a v-notch.

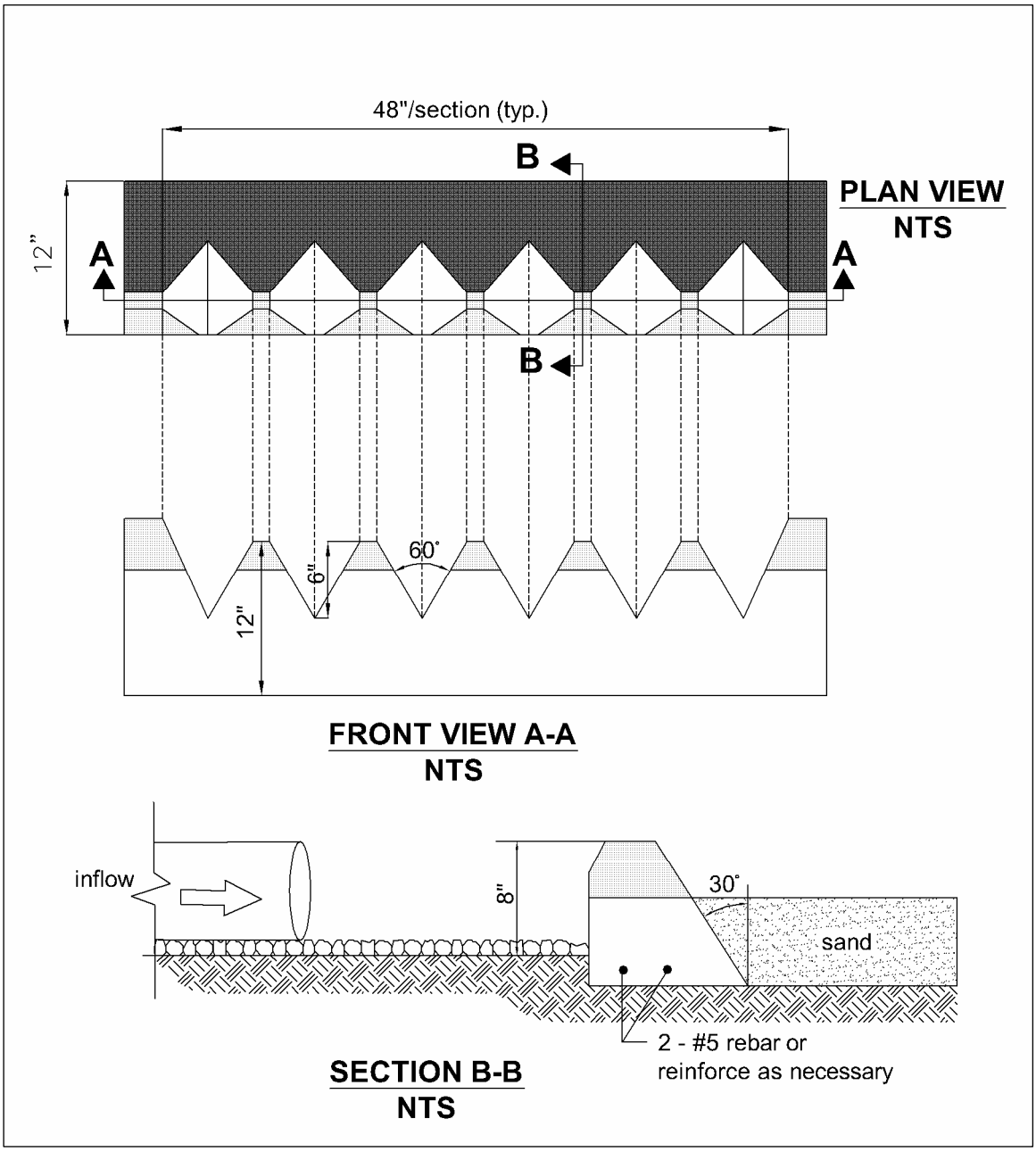

Figure V-3-5. Flow Spreader Option C – Notched Curb Spreader

Option D -- Through-Curb Ports (Figure V-3-6)

Unconcentrated flows from paved areas entering filter strips or continuous inflow biofiltration swales can use curb ports or interrupted curbs (Option E) to allow flows to enter the strip or swale. Curb ports use fabricated openings that allow concrete curbing to be poured or extruded while still providing an opening through the curb to admit water to the water quality facility.

Openings in the curb must be at regular intervals but at least every 6 feet (minimum). The width of each curb port opening must be a minimum of 11 inches. Approximately 15 percent or more of the curb section length shall be in open ports, and no port shall discharge more than about 10 percent of the flow.

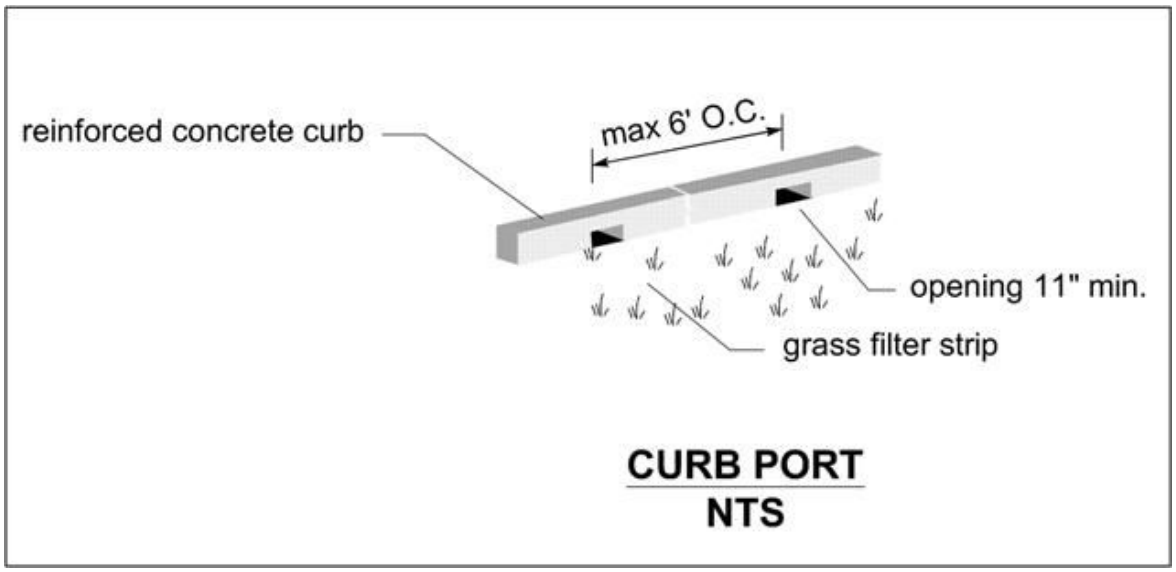

Figure V-3-6. Flow Spreader Option D – Through-Curb Ports

Option E -- Interrupted Curb

Interrupted curbs are sections of curb placed to have gaps spaced at regular intervals along the total width (or length, depending on facility) of the treatment area. At a minimum, gaps must be every 6 feet to allow distribution of flows into the treatment facility before they become too concentrated. The opening must be a minimum of 11 inches. As a general rule, no opening shall discharge more than 10 percent of the overall flow entering the facility.

Chapter 4 Pretreatment

4.1 Purpose

This chapter presents the methods that may be used to provide pretreatment prior to runoff treatment facilities. Pretreatment must be provided in the following applications:

- For sand filtration and infiltration Best Management Practices (BMPs) to protect them from excessive siltation and debris;
- Where the basic treatment facility or the receiving water may be adversely affected by non-targeted pollutants (e.g., oil), or may be overwhelmed by a heavy load of targeted pollutants (e.g., suspended solids).

4.2 Application

Presettling basins are a typical pretreatment BMP used to remove suspended solids. All basic, enhanced, and phosphorus treatment options may be used for pretreatment to reduce suspended solids.

A detention pond sized to meet the flow control standard in Volume I may also be used to provide pretreatment for suspended solids removal.

4.3 BMPs for Pretreatment

4.3.1 BMP T610 Presettling Basin

4.3.1.1 Purpose and Definition

A presettling basin provides pretreatment of runoff in order to remove suspended solids, which can impact other runoff treatment BMPs.

4.3.1.2 Application and Limitations

Runoff treated by a presettling basin may not be discharged directly to a receiving water; it must be further treated by a basic, enhanced, or phosphorus runoff treatment BMP.

4.3.1.3 Design Criteria

1. A presettling basin shall be designed using analysis techniques for a wetpool or using WWHM. The treatment volume shall be at least 30 percent of the total volume of runoff from the 6-month, 24-hour storm event.

2. If the runoff in the presettling basin will be in direct contact with the soil, it must be lined per the liner requirement in Section 3.4.

3. The presettling basin shall conform to the following:
   - The length-to-width ratio shall be at least 3:1. Berms or baffles may be used to lengthen the flowpath.
   - The minimum depth shall be 4 feet; the maximum depth shall be 6 feet.
4. Inlets and outlets shall be designed to minimize velocity and reduce turbulence. Inlet and outlet structures should be located at extreme ends of the basin in order to maximize particle-settling opportunities.

4.3.1.4 Site Constraints and Setback Requirements

Site constraints are any manmade restrictions such as property lines, easements, structures, etc. that impose constraints on development. Constraints may also be imposed from natural features such as requirements in the Auburn City Code. These should also be reviewed for specific application to the proposed development. For Setback Requirements see Section 3.3.1.

Chapter 5 Infiltration and Bio-infiltration Treatment Facilities

5.1 Purpose

This chapter provides site suitability, design, and maintenance criteria for infiltration treatment systems. Infiltration treatment Best Management Practices (BMPs) serve the dual purpose of removing pollutants (TSS, heavy metals, phosphates, and organics) from stormwater and recharging aquifers.

The infiltration BMPs described in this chapter include:

BMP T710	Infiltration basins
BMP T720	Infiltration trenches
BMP T730	Bio-infiltration swales

5.2 Application

These infiltration and bio-infiltration treatment measures are capable of achieving the performance objectives cited in Chapter 3 for specific treatment menus. In general, these treatment techniques can capture and remove or reduce the target pollutants to levels that will not adversely affect public health or beneficial uses of surface and groundwater resources.

Infiltration treatment systems are typically installed:

- As off-line systems, or on-line for small drainages.
- As a polishing treatment for street/highway runoff after pretreatment for TSS and oil.
- As part of a treatment train.
- As retrofits at sites with limited land areas, such as residential lots, commercial areas, parking lots, and open space areas.
- With appropriate pretreatment for oil and silt control to prevent clogging.

An infiltration basin is preferred, where applicable, and where a trench or bio-infiltration swale cannot be sufficiently maintained.

5.3 Site Suitability

The following site suitability criteria (SSC) must be considered. When a site investigation reveals that any of the eight applicable criteria cannot be met, appropriate mitigation measures must be implemented so that the infiltration facility will not pose a threat to safety, health, and the environment.

For site selection and design decisions a geotechnical and hydrogeologic report must be prepared by a qualified engineer with geotechnical and hydrogeologic experience, or an equivalent professional acceptable to the City, under the seal of a registered Professional Engineer. The design engineer may utilize a team of certified or registered professionals in soil science, hydrogeology, geology, and other related fields.

5.3.1 Setback Criteria (SSC-1)

Setback requirements are generally required by the City, uniform building code requirements, or other state regulations. Where a conflict between setbacks occurs, the City shall require compliance with the most stringent of the setback requirements from the various codes/regulations.

Setback criteria for the various infiltration and dispersion facilities can be found in the design criteria for each BMP in this chapter. ***Below are conditions that the soils professional must evaluate to determine the need for additional or more stringent setbacks than outlined in this manual.***

The professional must evaluate:

- Potential impacts to drinking water wells, septic tanks or drainfields, and springs used for public drinking water supplies. Minimum setback will be 100 feet. Infiltration facilities upgradient of drinking water supplies and within 1, 5, and 10-year time of travel zones must comply with Health Dept. requirements (Publication # 331-018).
- Potential impacts from roadways subject to deicers or herbicides which are likely to be present in the influent to the infiltration system.
- Potential impacts to all building foundations in the vicinity of the proposed infiltration facility. Recommend investigating all building foundations: within 100 feet upslope and 20 feet downslope from the facility.
- Potential impacts to all property lines within 20 feet of the facility.
- Potential impacts to a Native Growth Protection Easement (NGPE); ≥20 feet.
- Potential impacts to the top of slopes >20% and within 50 feet.
- On-site and off-site structural stability due to extended subgrade saturation and/or head loading of the permeable layer, including the potential impacts to downgradient properties, especially on hills with known side-hill seeps.

5.3.2 Groundwater Protection Areas (SSC-2)

A site is not suitable if the infiltration facility will cause a violation of Ecology's Groundwater Quality Standards (See Section 5.3.7 for verification testing guidance).

5.3.3 High Vehicle Traffic Areas (SSC-3)

An infiltration BMP may be considered for runoff from areas of industrial activity and the high vehicle traffic areas described below. For such applications sufficient pollutant removal (including oil removal) shall be provided upstream of the infiltration facility to ensure that groundwater quality standards will not be violated and that the infiltration facility is not adversely affected.

High Vehicle Traffic Areas are:

- Commercial or industrial sites subject to an expected average daily traffic count (ADT) ≥100 vehicles/1,000 ft² gross building area (trip generation), and
- Road intersections with an ADT of ≥ 25,000 on the main roadway, or ≥ 15,000 on any intersecting roadway.

5.3.4 Soil Infiltration Rate/Drawdown Time for Treatment (SSC-4)

5.3.4.1 Infiltration Rates: Short-term and Long-term

For treatment purposes, the short-term soil infiltration rate should be 2.4 in/hour, or less, to a depth of 2.5 times the maximum design pond water depth, or a minimum of 6 ft. below the base of the infiltration facility. This infiltration rate is also typical for soil textures that possess sufficient physical and chemical properties for adequate treatment, particularly for soluble pollutant removal (see Section 5.3.6). It is comparable to the textures represented by Hydrologic Groups B and C. Long-term infiltration rates up to 2.0 inches/hour can also be considered, if the infiltration receptor is not a sole-source aquifer, and in the judgment of the site professional, the treatment soil has characteristics comparable to those specified in SSC-6 to adequately control the target pollutants.

The long-term infiltration rate should be used for drawdown time and routing calculations.

5.3.4.2 Drawdown Time

Refer to Section 5.4 for infiltration rate determination. Document that the 91st percentile, 24-hour runoff volume (as indicated by the Western Washington Hydrology Model [WWHM]) can infiltrate through the infiltration basin surface within 48 hours. This can be calculated using a horizontal projection of the infiltration basin mid-depth dimensions and the estimated long-term infiltration rate.

This drawdown restriction is intended to meet the following objectives:

- Restore hydraulic capacity to receive runoff from a new storm,
- Maintain infiltration rates,
- Aerate vegetation and soil to keep the vegetation healthy, and
- Enhance the biodegradation of pollutants and organics in the soil.

5.3.5 Depth to Bedrock, Water Table, or Impermeable Layer (SSC-5)

The base of all infiltration basins or trench systems shall be ≥ 5 feet above the seasonal high-water mark, bedrock (or hardpan) or other low permeability layer. A separation down to 3 feet may be considered if the groundwater mounding analysis, volumetric receptor capacity, and the design of the overflow and/or bypass structures are judged by the site professional to be adequate to prevent overtopping and meet the site suitability criteria specified in this section.

5.3.6 Soil Physical and Chemical Suitability for Treatment (SSC-6)

The soil texture and design infiltration rates should be considered along with the physical and chemical characteristics specified below to determine if the soil is adequate for removing the target pollutants. The following soil properties must be carefully considered in making such a determination:

- Cation exchange capacity (CEC) of the treatment soil must be ≥5 milliequivalents CEC/100 g dry soil (USEPA Method 9081). *Consider empirical testing of soil sorption capacity, if practicable*. Ensure that soil CEC is sufficient for expected pollutant loadings, particularly heavy metals. CEC values of >5 meq/100g are expected in loamy sands, according to Rawls, et al. Lower CEC content may be considered if it is based on a soil loading capacity determination for the target pollutants that is accepted by the City.
- Depth of soil used for infiltration treatment must be a minimum of 18 inches.
- Organic Content of the treatment soil (ASTM D 2974): Organic matter can increase the sorptive capacity of the soil for some pollutants. The site professional should evaluate whether the organic matter content is sufficient for control of the target pollutant(s).
- Waste fill materials should not be used as infiltration soil media nor should such media be placed over uncontrolled or non-engineered fill soils.

Engineered soils may be used to meet the design criteria in this chapter and the performance goals in Chapter 2 and Chapter 3. Field performance evaluation(s), using acceptable protocols, would be needed to determine feasibility and acceptability by the City of Auburn.

5.3.7 Seepage Analysis and Control (SSC-7)

Determine whether there would be any adverse effects caused by seepage zones on nearby building foundations, basements, roads, parking lots or sloping sites.

5.3.8 Cold Climate and Impact of Roadway Deicers (SSC-8)

For cold climate design criteria (snowmelt/ice impacts) refer to D. Caraco and R. Claytor, “Design Supplement for Stormwater BMPs in Cold Climates”, Center for Watershed Protection, 1997.

Potential impact of roadway deicers on potable water wells must be considered in the siting determination. Mitigation measures must be implemented if infiltration of roadway deicers can cause a violation of groundwater quality standards.

5.3.9 Verification Testing of the Completed Facility

Verification testing of the completed full-scale infiltration facility is recommended to confirm that the design infiltration parameters are adequate. The site professional should determine the duration and frequency of the verification testing program including the monitoring program for the potentially impacted groundwater. The groundwater monitoring wells installed during site characterization (see 5.4) may be used for this purpose. Long-term (more than two years) in-situ drawdown and confirmatory monitoring of the infiltration facility would be preferable. The City may require verification testing on a case-by-case basis.

5.4 Site Characterization

Use the following guidelines to determine if the site suitability criteria have been met.

5.4.1 Field Methods used to Determine Subsurface Characterization

5.4.1.1 Test Holes or Pits

- Dig test holes or pits to a depth below the base of the infiltration facility of at least 5 times the maximum design depth of ponded water proposed for the infiltration facility,
- Conduct pit/hole exploration during the wet season (December 1st through April 30th) to provide accurate groundwater saturation and groundwater information.
- Take soil samples (representative samples from each soil type and/or unit within the infiltration receptor) to a depth below the base of the infiltration facility of 2.5 times the maximum design ponded water depth, but not less than 6 feet.
    - For basins, at least one test pit or test hole per 5,000 ft^2 of basin infiltrating surface (in no case less than two per basin) is required.
    - For trenches, at least one test pit or test hole per 50 feet of trench length (in no case less than two per trench) is required.

The depth and number of test holes or test pits and samples should be increased if, in the judgment of a licensed engineer with geotechnical expertise (P.E.) or other licensed professional acceptable to the City, the conditions are highly variable and such increases are necessary to accurately estimate the performance of the infiltration system. The exploration program may also be decreased if, in the opinion of the licensed engineer or other professional, the conditions are relatively uniform and the borings/test pits omitted will not influence the design or successful operation of the facility. In high water table sites the subsurface exploration sampling need not be conducted lower than two (2) feet below the groundwater table.

- Prepare detailed logs for each test pit or test hole and a map showing the location of the test pits or test holes. Logs must include at a minimum, depth of pit or hole, soil descriptions, depth to water, presence of stratification.

  At a minimum, soil characterization for each soil unit (soils of the same texture, color, density, compaction, consolidation and permeability) encountered shall include:

    - Grain-size distribution (ASTM D422 or equivalent AASHTO specification).
    - Textural class (USDA) (see Volume III, Figure III-2-5).
    - Percent clay content (include type of clay, if known).
    - Cation exchange capacity (CEC) and organic matter content for each soil type and strata. Where distinct changes in soil properties occur, to a depth below the base of the facility of at least 2.5 times the maximum design water depth, but not less than 6 feet. Consider if soils are already contaminated, thus diminishing pollutant sorptive capacity (for water quality design only).

- For soils with low CEC and organic content, deeper characterization of soils may be warranted.
- Color/mottling.
- Variations and nature of stratification.

5.4.1.2 Infiltration Rate Determination

Determine the representative infiltration rate of the unsaturated vadose zone based on field infiltration tests and/or grain size/texture determinations. Field infiltration rates can be determined using the Pilot Infiltration Test (see PIT-Appendix B). Such site testing should be considered to verify infiltration rate estimates based on soil size distribution and/or texture. Infiltration rates may also be estimated based on soil grain-size distributions from test pits or test hole samples. This may be particularly useful where a sufficient source of water does not exist to conduct a pilot infiltration test. As a minimum, one soil grain-size analysis per soil stratum in each test hole shall be performed within 2.5 times the maximum design water depth, but not less than 6 feet.

The infiltration rate is needed for routing and sizing purposes and for classifying the soil for treatment adequacy.

5.4.1.3 Infiltration Receptor

Infiltration receptor (unsaturated and saturated soil receiving the storm water) characterization should include:

- Installation of groundwater monitoring wells. Use at least three per infiltration facility, or three hydraulically connected surface and groundwater features. This will establish a three-dimensional relationship for the groundwater table, unless the highest groundwater level is known to be at least 50 feet below the proposed infiltration facility. The monitoring wells will:
  - Monitor the seasonal groundwater levels at the site during at least one wet season, and,
  - Consider the potential for both unconfined and confined aquifers, or confining units, at the site that may influence the proposed infiltration facility as well as the groundwater gradient. Other approaches to determine groundwater levels at the proposed site could be considered if pre-approved by the City, and,
  - Determine the ambient groundwater quality, if that is a concern.
- An estimate of the volumetric water holding capacity of the infiltration receptor soil. This is the soil layer below the infiltration facility and above the seasonal high-water mark, bedrock, hardpan, or other low permeability layer. This analysis should be conducted at a conservatively high infiltration rate based on vadose zone porosity, and the water quality runoff volume to be infiltrated. This, along with an analysis of groundwater movement, will be useful in determining if there are volumetric limitations that would adversely affect drawdown.
- Depth to groundwater table and to bedrock/impermeable layers.

- Seasonal variation of groundwater table based on well water levels and observed mottling.
- Existing groundwater flow direction and gradient.
- Lateral extent of infiltration receptor.
- Horizontal hydraulic conductivity of the saturated zone to assess the aquifer's ability to laterally transport the infiltrated water.
- Impact of the infiltration rate and volume at the project site on groundwater mounding, flow direction, and water table; and the discharge point or area of the infiltrating water. A groundwater mounding analysis shall be conducted at all sites where the depth to seasonal groundwater table or low permeability stratum is less than 15 feet and the runoff to the infiltration facility is from more than one acre. The site professional can consider conducting an aquifer test, or slug test and the type of groundwater mounding analysis necessary at the site.

5.4.2 Design Infiltration Rate Determination

Infiltration rates for treatment can be determined using either a correlation to grain size distribution from soil samples, textural analysis, or by in-situ field measurements.

Infiltration rate design information shall be prepared and sealed by a licensed engineer or licensed geologist and submitted to the City along with the Stormwater Site Plan.

5.4.2.1 Three Methods for Determining Long-term Infiltration Rate for Sizing the Infiltration Basin, Trench, or Swale

For designing the infiltration facility, the site professional should select one of the three methods described below that will best represent the long-term infiltration rate at the site. The long-term infiltration rate should be used for routing and sizing the basin/trench for the maximum drawdown time of 24 hours. Verification testing of the completed facility is strongly encouraged using the criteria described in Section 5.3.9.

Method 1 — USDA Soil Textural Classification

The infiltration rates provided in Volume III, Table III-2-7 represents rates for homogeneous soil conditions. If more than one soil unit is encountered within 6 feet of the base of the facility, or 2.5 times the proposed maximum water design depth, use the lowest infiltration rate determined from each of the soil units as the representative site infiltration rate.

- Use Volume III, Figure III-2-5 (USDA Textural Triangle) to determine the soil textural classification. Only soils passing the #10 sieve may be used to determine the percentages of sand, silt, and clay.
- More information on the USDA textural classification can be found in the Soils Survey Manual (U.S. Department of Agriculture, October 1993).
- Use the textural classification obtained from Volume III, Figure III-2-5 and Volume III, Table III-2-7 to determine the short and long-term infiltration rates. Treatment site suitability criteria (Section 5.3.4) must be met.

- Consider alternate correction factors if site conditions warrant. Alternate correction factors require City approval.

  In no case shall a correction factor less than 2.0 be used.

  Correction factors higher than those provided in Volume III, Table III-2-7 should be considered for situations where: long-term maintenance will be difficult to implement; where little or no pretreatment is anticipated, where site conditions are highly variable or uncertain, or where soil mottling exists that cannot be fully represented in the soil gradation tests. These situations require the use of best professional judgment by the site engineer and the approval of the City. An operation and maintenance plan and a financial bonding plan may also be required by the City.

Use Method 2 if the soil gradation was determined using ASTM D422.

Method 2 — ASTM Gradation Testing at Full Scale Infiltration Facilities

This method may not be used for soils with a d_{10} size less than 0.05 mm (U.S. Standard Sieve).

The infiltration rates provided in Volume III, Table III-2-8 represent rates for homogeneous soil conditions. If more than one soil unit is encountered within 6 feet of the base of the facility, or 2.5 times the proposed maximum water design depth, use the lowest infiltration rate determined from each of the soil units as the representative site infiltration rate.

1. Determine the long-term infiltration rate using the d_{10} value obtained from ASTM D422 and Volume III, Table III-2-8.

2. Consider alternate correction factors if site conditions warrant. Alternate correction factors require City approval.

3. Correction factors higher than those provided in Volume III, Table III-2-7 should be considered for situations where: long-term maintenance will be difficult to implement; where little or no pretreatment is anticipated, where site conditions are highly variable or uncertain, or where soil mottling exists that cannot be fully represented in the soil gradation tests. These situations require the use of best professional judgment by the site engineer and the approval of the City. An operation and maintenance plan and a financial bonding plan may also be required by the City.

Method 3 - In-situ Infiltration Measurements or Pilot Infiltration Tests (PIT)

Where feasible, use in-situ infiltration measurements. Use a procedure such as the Pilot Infiltration Test (PIT) described in Appendix B.

As with the previous methods, the infiltration rate obtained from the PIT shall be considered to be a short-term rate. To obtain long-term infiltration rates the short-term rates must be reduced by applying a total correction factor. The total correction factor is the sum of the partial correction factors, presented in Table V-B-17 (Appendix B), which account for site variability, number of tests conducted, degree of long-term maintenance, influent pretreatment/control, and potential for long-term clogging due to siltation and bio-buildup.

The range of partial correction factors is for general guidance only. The specific partial correction factors used shall be determined based on the professional judgment of the licensed engineer or other site professional considering all issues which may affect the long-term infiltration rate, subject to the approval of the City.

Use the following guidance to determine the partial correction factors to apply from Table V-B-17 (Appendix B).

- *Site variability and number of locations tested.* The number of locations tested must represent the subsurface conditions throughout the facility site. If the range of uncertainty is low (for example, conditions are known to be uniform through previous exploration and site geological factors), one pilot infiltration test may be adequate to justify a partial correction factor at the low end of the range. If the level of uncertainty is high, due to highly variable site conditions or limited local testing data, a partial correction factor near the high end of the range may be appropriate. This might be the case where the site conditions are highly variable due to a deposit of ancient landslide debris, or buried stream channels. In these cases, even with many explorations and several pilot infiltration tests, the level of uncertainty may still be high.
- *Degree of long-term maintenance to prevent siltation and bio-buildup.* The standard of comparison here is the long-term maintenance requirements provided in Volume I, Appendix D and any additional requirements by the City. Full compliance with these requirements would be justification to use a partial correction factor at the low end of the range. If there is a high degree of uncertainty that long-term maintenance will be carried out consistently, or if the maintenance plan is poorly defined, a partial correction factor near the high end of the range may be justified.
- *Degree of influent control to prevent siltation and bio-buildup.* A partial correction factor near the high end of the range may be justified under the following circumstances:
    - If the infiltration facility is located in a shady area where moss or litter fall, buildup from the surrounding vegetation is likely and cannot be easily controlled through long-term maintenance.
    - If there is minimal pretreatment, and the influent is likely to contain moderately-high TSS levels.

The determination of long-term design infiltration rates from in-situ infiltration test data involves a considerable amount of engineering judgment. Therefore, when reviewing or determining the final long-term design infiltration rate, the City may consider the results of both textural analyses and in-situ infiltration tests results when available.

5.4.2.2 General Sizing Criteria

This information is applicable to infiltration basins, trenches, and bio-infiltration facilities.

Size the device by routing 91% of the runoff volume, as predicted by the WWHM through the facility.

Infiltration facilities for treatment can be located upstream or downstream of detention and can be off-line or on-line.

- ***On-line*** treatment facilities placed ***upstream or downstream*** of a detention facility must be sized to infiltrate 91% of the runoff file volume directed to it.
- ***Off-line*** treatment facilities placed ***upstream*** of a detention facility must have a flow splitter designed to send all flows at or below the 15-minute water quality flow rate, as predicted by WWHM, to the treatment facility. The treatment facility must be sized to infiltrate all the runoff sent to it (no overflows from the treatment facility are allowed).
- ***Off-line*** treatment facilities placed ***downstream*** of a detention facility must have a flow splitter designed to send all flows at or below the 2-year flow frequency from the detention pond, as predicted by WWHM, to the treatment facility. The treatment facility must be sized to infiltrate all the runoff sent to it (no overflows from the treatment facility are allowed).

5.4.2.3 General Design Criteria

- Slope of the base of the infiltration facility should be $<$ 3 percent.
- Spillways/overflow structures – A non-erodible outlet or spillway with a firmly established elevation must be constructed to discharge overflow. Ponding depth, drawdown time, and storage volume are calculated from that reference point. Refer to Volume III, Section 2.3 for overflow structure design details.
- For infiltration treatment facilities, side-wall seepage is not a concern if seepage occurs through the same stratum as the bottom of the facility. However, for engineered soils or for soils with very low permeability, the potential to bypass the treatment soil through the side-walls may be significant. In those cases, the side-walls must be lined, either with an impervious liner or with at least 18 inches of treatment soil, to prevent seepage of untreated flows through the side walls.

5.4.2.4 General Construction Criteria

- Initially excavate to within 1-foot of the final floor elevation of the infiltration facility. Do not excavate to the final grade until all disturbed areas in the upgradient watershed have been stabilized or protected. Remove all accumulated sediment in the final phase of excavation.
- Post-construction, all water must be conveyed through a pretreatment device to prevent sedimentation.
- Infiltration facilities should not be used as temporary sediment traps during construction.
- Use light-tracked equipment for excavation to avoid compaction of the floor of the infiltration facility. The use of draglines and trackhoes should be considered. The infiltration area should be flagged or marked to keep equipment away.

5.4.2.5 Maintenance Criteria

- Make provision for regular and perpetual maintenance of the infiltration basin/trench, including replacement and/or reconstruction of the treatment infiltration medium.
- Include access for operation and maintenance in system design.
- Include an operation and maintenance plan. The plan must be approved by the City.
- Remove accumulated debris/sediment every 6 months or as needed to prevent clogging, or when water remains in the pond for greater than 24 hours.
- Replace or amend the treatment soil as needed to ensure maintaining adequate treatment capacity.

5.4.2.6 Verification of Performance

During the first 1 to 2 years of operation, verification testing as specified in Section 5.3.9 is strongly recommended, along with a maintenance program that achieves expected performance levels. Operating and maintaining groundwater monitoring wells is also strongly encouraged.

In order to determine compliance with the flow control requirements, the WWHM must be used.

5.5 BMPs for Infiltration and Bio-infiltration Treatment

The three BMPs discussed below are recognized currently as effective treatment techniques using infiltration and bio-infiltration. Selection of a specific BMP should be based on the Treatment Facility Menus provided in Chapter 2.

5.5.1 BMP T710 Infiltration Basins

5.5.1.1 Description

Infiltration basins are earthen impoundments used for the collection, temporary storage and infiltration of incoming stormwater runoff.

5.5.1.2 Design Criteria Specific for Basins

- Complete a site suitability analysis per Section 5.3.
- Provide access for vehicles to easily maintain the forebay (presettling basin) area and not disturb vegetation, or resuspend sediment any more than is absolutely necessary.
- The slope of the basin bottom should not exceed 3% in any direction.
- Provide a minimum of one foot of freeboard when establishing the design ponded water depth. Freeboard is measured from the rim of the infiltration facility to the maximum ponding level or from the rim down to the overflow point if overflow or a spillway is included.
- Establish vegetation on the basin floor and side slopes to prevent erosion and sloughing and to provide additional pollutant removal. Provide erosion protection of inflow points to the basin (e.g., riprap, flow spreaders, energy dissipators (See Chapter 3). Refer to Chapter 7 for recommended vegetation.
- Lining material – Basins can be open or covered with a 6 to 12-inch layer of filter material such as coarse sand, or a suitable filter fabric to help prevent the buildup of impervious deposits on the soil surface. A nonwoven geotextile should be selected that will function sufficiently without plugging (see geotextile specifications in Appendix C). The filter layer shall be replaced or cleaned when/if it becomes clogged.
- Stabilize and plant embankment, emergency spillways, spoil and borrow areas, and other disturbed areas. Without healthy vegetation the surface soil pores would quickly plug.

5.5.1.3 Maintenance Criteria for Basins

- Maintain basin floor and side slopes to promote dense turf with extensive root growth. This enhances infiltration, prevents erosion and consequent sedimentation of the basin floor, and prevents invasive weed growth. Immediately stabilize and revegetate any bare spots.
- Vegetation growth should not be allowed to exceed 18 inches in height. Mow the slopes periodically and check for clogging, and erosion. Remove clippings from mowing, weeding and pruning operations.
- Seed mixtures should be the same as those recommended in Table V-7-12. The use of slow-growing, stoloniferous grasses will permit long intervals between mowing. Mowing twice a year is generally satisfactory. Fertilizers are not allowed.

5.5.2 BMP T720 Infiltration Trenches

5.5.2.1 Description

Infiltration trenches are generally at least 24 inches wide, and are backfilled with a coarse stone aggregate, allowing for temporary storage of stormwater runoff in the voids of the aggregate material. Stored runoff gradually infiltrates into the surrounding soil. The surface of the trench can be covered with grating and/or consist of stone, gabion, sand, or a grassed covered area with a surface inlet. Perforated rigid pipe of at least 8-inch diameter can also be used to distribute the stormwater in a stone trench.

5.5.2.2 Design Criteria

- Complete a site suitability analysis per Section 5.3.
- Include an access port or open or grated top for accessibility to conduct inspections and maintenance.
- Use clean aggregate with a maximum diameter of 3 inches and a minimum diameter of 1.5 inches to fill trench. Void space for these aggregates should be in the range of 30 to 40 percent.
- Line sides of trench with an engineered geotextile material. Geotextile should surround all of the aggregate fill material except for the top one-foot, which is placed over the geotextile. Geotextile fabric with acceptable properties must be carefully selected to avoid plugging (see Appendix C).
- The bottom sand or geotextile fabric is optional.
- Overflow Channel - Because an infiltration trench is generally used for small drainage areas, an emergency spillway is not necessary. However, a non-erosive overflow channel leading to a stabilized watercourse should be provided.
- Trench can be placed under a porous or impervious surface cover to conserve space.
- Install an observation well at the lower end of the infiltration trench to check water levels, drawdown time, sediment accumulation, and conduct water quality monitoring. Figure V-5-7 illustrates observation well details. It should consist of a perforated PVC pipe which is 4 to 6 inches in diameter and it should be constructed flush with the ground elevation. For larger trenches a 12-36 inch diameter well can be installed to facilitate maintenance operations such as pumping out the sediment. Cap the top of the well to discourage vandalism and tampering.

5.5.2.3 Construction Criteria

- **Trench Preparation** –Place excavated materials away from the trench sides to enhance trench wall stability. Keep excavated material away from slopes, neighboring property, sidewalks and streets.

- **Stone Aggregate Placement and Compaction** – Place the stone aggregate in lifts and compact using plate compactors. As a rule of thumb, a maximum loose lift thickness of 12 inches is recommended. The compaction process ensures geotextile conformity to the excavation sides, thereby reducing potential piping and geotextile clogging, and settlement problems.
- **Potential Contamination** - Prevent natural or fill soils from intermixing with the stone aggregate. Remove all contaminated stone aggregate and replace with uncontaminated stone aggregate.
- **Overlapping and Covering** - Following the stone aggregate placement, fold the geotextile over the stone aggregate to form a 12-inch-minimum longitudinal overlap. When overlaps are required between rolls, overlap the upstream roll a minimum of 2 feet over the downstream roll in order to provide a shingled effect.
- **Voids behind Geotextile** – Avoid voids between the geotextile and excavation sides. Remove boulders or other obstacles from the trench walls. Place natural soils in voids at the most convenient time during construction to ensure geotextile conformity to the excavation sides. Soil piping, geotextile clogging, and possible surface subsidence will be avoided by this remedial process.
- **Unstable Excavation Sites** - Vertically excavated walls may be difficult to maintain in areas where the soil moisture is high or where soft or cohesionless soils predominate. Trapezoidal, rather than rectangular, cross-sections may be needed.

5.5.2.4 Maintenance Criteria

- Monitor sediment buildup in the top foot of stone aggregate or the surface inlet.

5.5.3 BMP T730 Bio-infiltration Swale

5.5.3.1 Description

Bio-infiltration swales, also known as Grass Percolation Areas, combine grassy vegetation and soils to remove stormwater pollutants by percolation into the ground. Their pollutant removal mechanisms include filtration, soil sorption, and uptake by vegetative root zones.

In general, bio-infiltration swales are used for treating stormwater runoff from roofs, roads and parking lots. Runoff volumes greater than water quality design volume are typically overflowed to the subsurface through an appropriate conveyance facility such as a dry well, or an overflow channel to surface water. Overflows that are directed to a surface water must meet Minimum Requirement #7 or #8 (whichever is applicable). If applicable, see Volume I, Chapter 2.

5.5.3.2 Additional Design Criteria Specific for Bio-infiltration Swales

- Complete a site suitability analysis per Section 5.3.
- Swale bottom: flat with a longitudinal slope less than 1%.
- Maximum ponded level: 6 inches.
- The design soil thickness may be reduced to as low as 6 inches if appropriate performance data demonstrates that the vegetated root zone and the natural soil can be expected to provide adequate removal and loading capacities for the target pollutants. The design professional should calculate the pollutant loading capacity of the treatment soil to estimate if there is sufficient treatment soil volume for an acceptable design period.
- Other combinations of treatment soil thickness, CEC, and organic content design factors can be considered if it is demonstrated that the soil and vegetation will provide a target pollutant loading capacity and performance level acceptable.
- The treatment zone depth must contain sufficient organics and texture to ensure good growth of the vegetation.
- If demonstrated that 6 inches of treatment depth is sufficient, the maximum infiltration rate is 1 in/hr. In these cases, all other portions of the Site Suitability Criteria apply.
- Use native or adapted grass.
- Pretreat to prevent the clogging of the treatment soil and/or growth of the vegetation.
- Identify pollutants, particularly in industrial and commercial area runoff, that could cause a violation of Ecology's Groundwater Quality Standards (Chapter 173-200 WAC). Include appropriate mitigation measures (pretreatment, source control, etc.) for those pollutants.

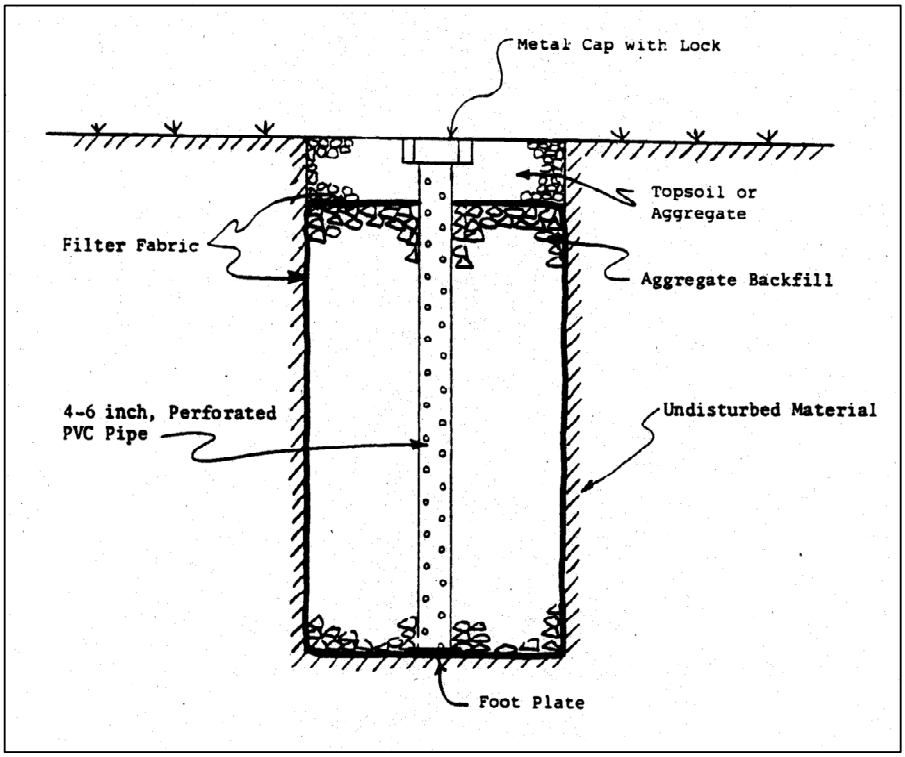

Figure V-5-7. Observation Well Details

Chapter 6 Sand Filtration Treatment Facilities

6.1 Purpose

This chapter presents criteria for the design, construction and maintenance of runoff treatment sand filters. Treatment sand filters are used to collect, treat and remove TSS, phosphorous, and insoluble organics (including oils) from stormwater.

Sand filtration options discussed in this Chapter are:

Basic Sand Filter
Large Sand Filter
BMP T810 Sand Filter Vault
BMP T820 Linear Sand Filter

6.2 Description

A typical sand filtration system consists of a pretreatment facility, flow spreader(s), a sand bed, and the underdrain piping. The sand filter bed includes a geotextile fabric between the sand bed and the bottom underdrain system.

An impermeable liner under the facility may also be needed if the filtered runoff requires additional treatment to remove soluble groundwater pollutants, or in cases where additional groundwater protection is mandated. The variations of a sand filter include a basic or large sand filter, sand filter with level spreader, sand filter vault, and linear sand filter. Figures V-6-8 through V-6-15 provide examples of various sand filter configurations.

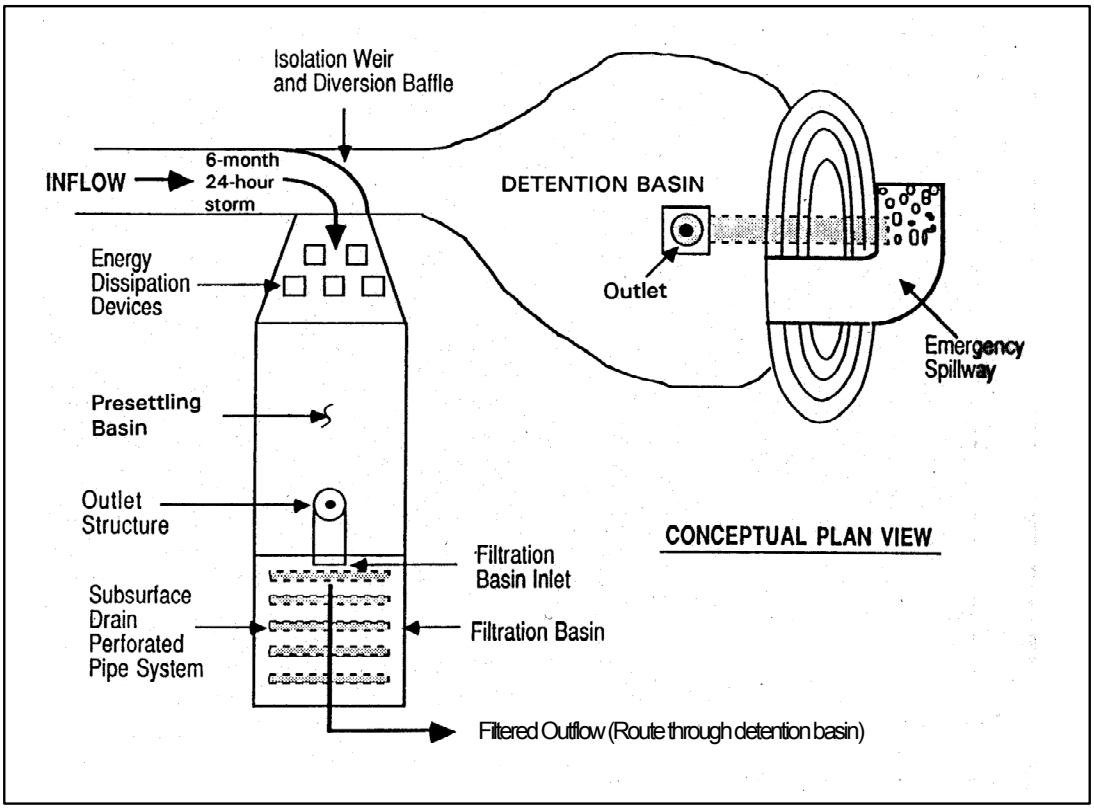

Figure V-6-8. Sand Filtration Basin Preceded by Presettling Basin (Variation of a Basic Sand Filter)

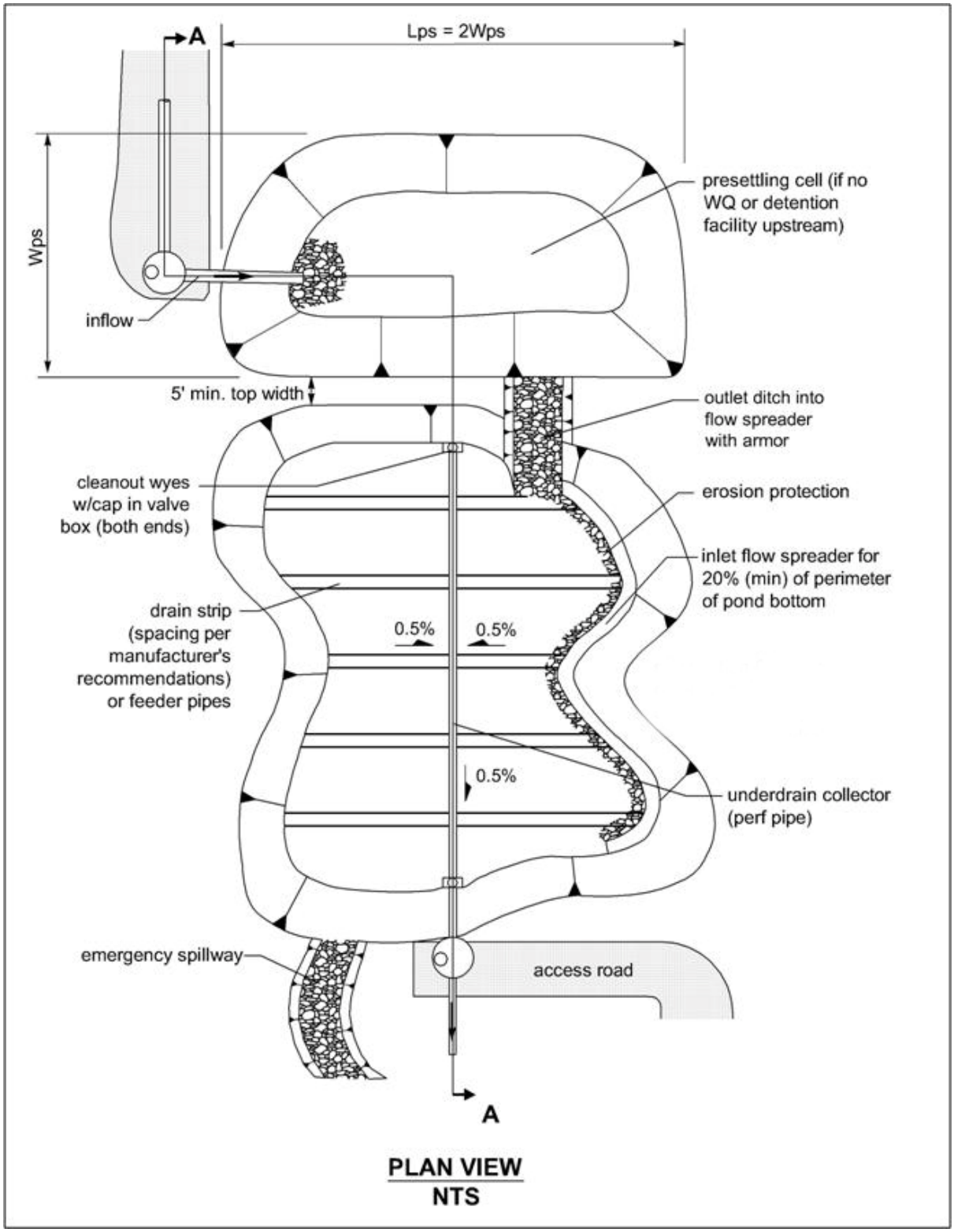

Figure V-6-9. Sand Filter with a Pretreatment Cell (top view)

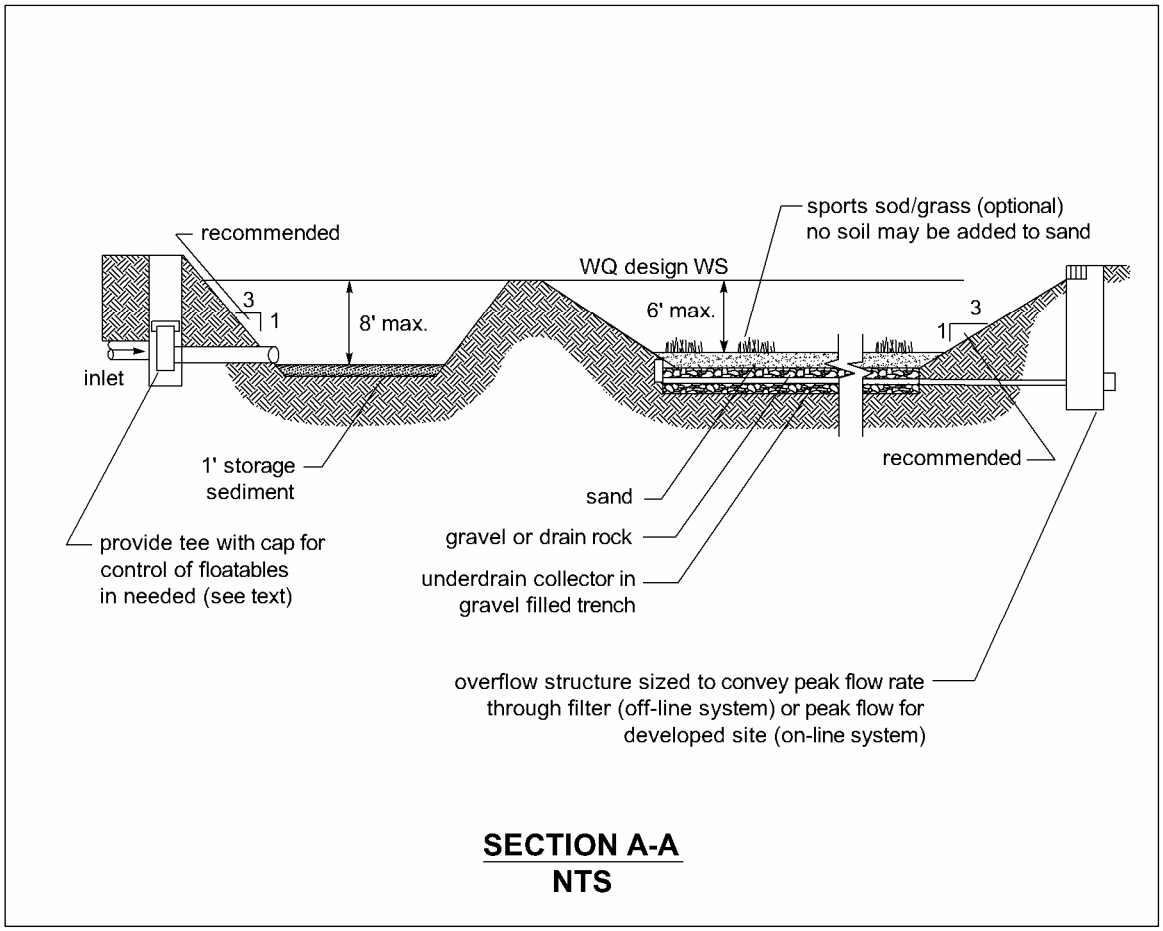

Figure V-6-10. Sand Filter with a Pretreatment Cell (side view)

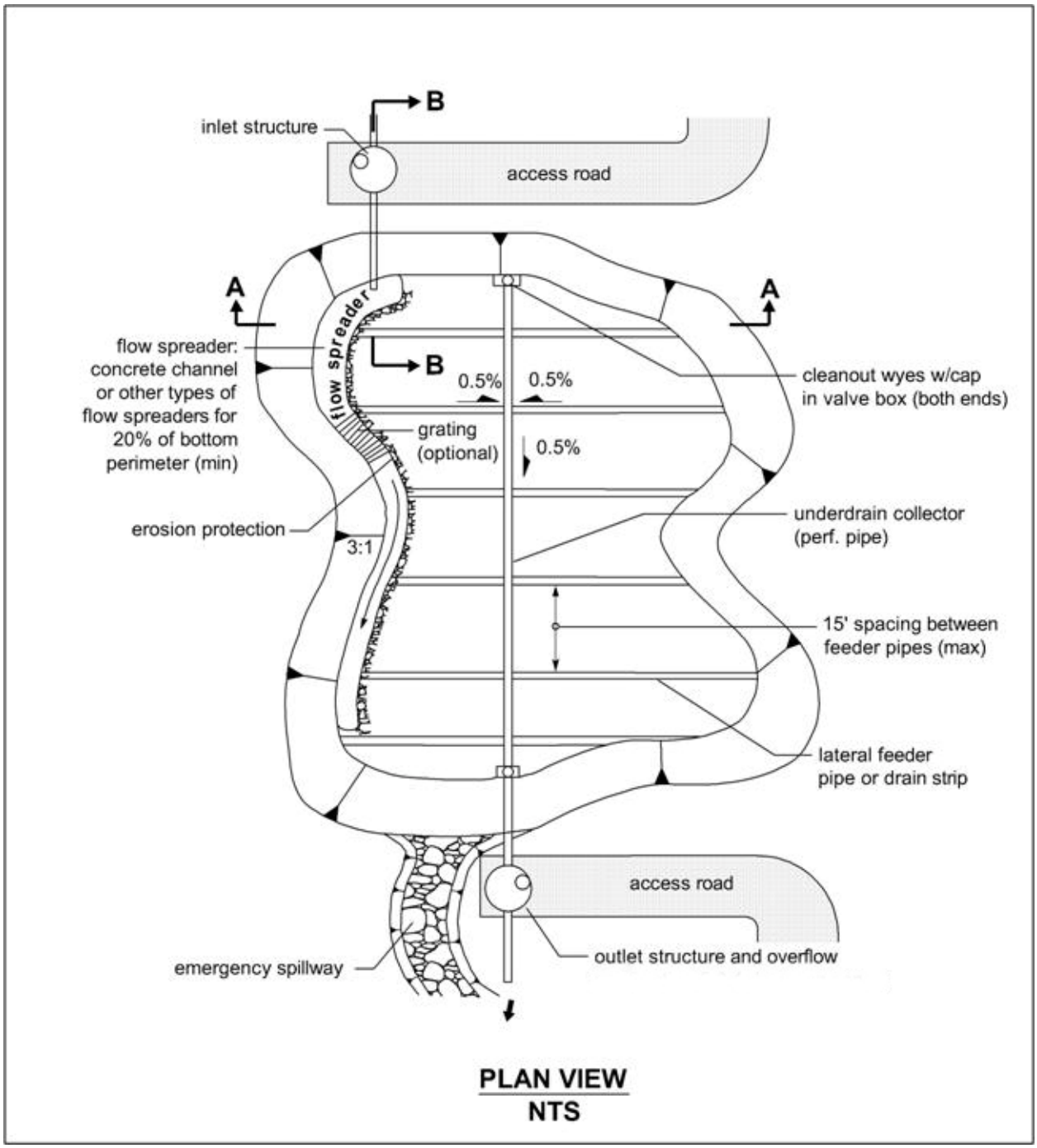

Figure V-6-11. Sand Filter with Level Spreader (top view)

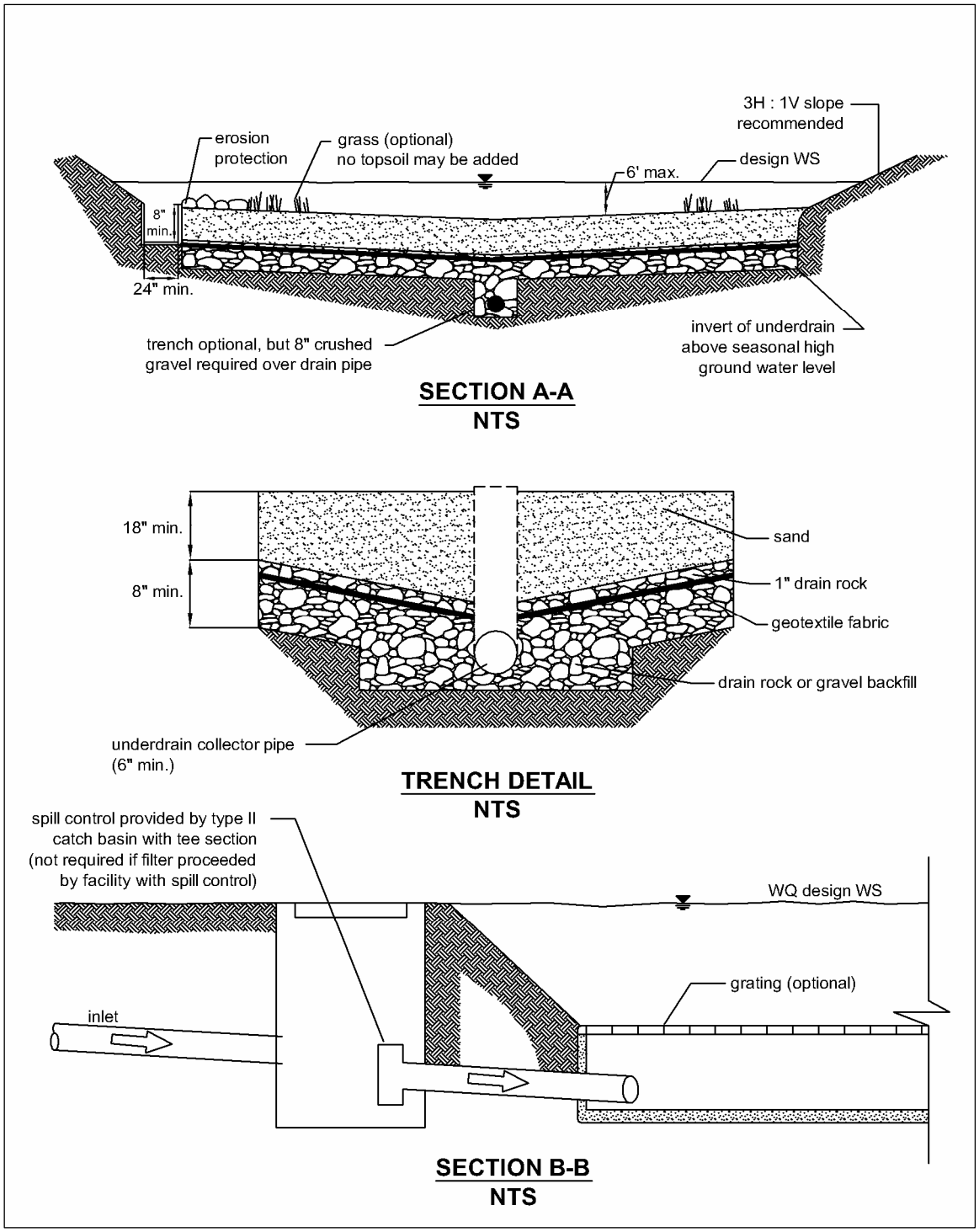

Figure V-6-12. Sand Filter with Level Spreader (side view)

6.3 Applications and Limitations

Sand filtration can be used in most residential, commercial, and industrial developments where debris, heavy sediment loads, and oils and greases will not clog or prematurely overload the sand, or where adequate pretreatment is provided for these pollutants.

Pretreatment is necessary to reduce velocities to the sand filter and remove debris, floatables, large particulate matter, and oils. In high water table areas, adequate drainage of the sand filter may require additional engineering analysis and design considerations. An underground filter should be considered in areas subject to freezing conditions. (Urbonas, 1997)

6.4 Site Suitability

The following site characteristics should be considered in siting a sand filtration system:

- Space availability, including the space needed for a presettling basin.
- Sufficient hydraulic head, at least 4 feet from inlet to outlet.
- Adequate Operation and Maintenance capability including accessibility for O&M.
- Sufficient pretreatment of oil, debris and solids in the tributary runoff.

6.5 Design Criteria

6.5.1 Objective

The objective is to capture and treat 91% of the total runoff volume (95% for large sand filters) as predicted by the Western Washington Hydrology Model (WWHM).

6.5.2 Sand Filter Sizing

Sand filter design criteria are as follows:

1. The design hydraulic conductivity shall be 1 in/hr.

2. ***On-line*** sand filters must NOT be placed ***upstream*** of a detention facility. This is to prevent exposure of the sand filter surface to high flow rates that could cause loss of media and previously removed pollutants.

3. ***On-line*** sand filters placed ***downstream*** of a detention facility must be sized using WWHM to filter 91% of the runoff volume.

4. ***Off-line*** sand filters placed ***upstream*** of a detention facility must have a flow splitter designed to send all flows at or below the 15-minute water quality flow rate, as predicted by WWHM to the sand filter. The sand filter must be sized to filter all the runoff sent to it (no overflows from the treatment facility should occur).

5. ***Off-line*** sand filters placed ***downstream*** of a detention facility must have a flow splitter designed to send all flows at or below the 2-year frequency peak flow as predicted by WWHM, from the detention facility to the treatment facility. The treatment facility must be sized to filter all the runoff sent to it (no overflows from the treatment facility should occur).

6. Include an overflow in the design. The overflow height shall be at the maximum hydraulic head of the water above the sand bed.

7. Pretreat runoff to be treated by the sand filter (e.g., presettling basin, etc. depending on pollutants) to remove debris and other solids, and oil from high use sites.

8. Design inlet bypass and flow spreading structures (e.g., flow spreaders, weirs or multiple orifice openings) to capture the applicable design flow rate, minimize turbulence and to spread the flow uniformly across the surface of the sand filter. Install stone riprap or other energy dissipation devices to prevent gouging of the sand medium and to promote uniform flow. Include emergency spillway or overflow structures (see Volume III).

9. Include underdrain piping in sand filter design. Types of underdrains include a central collector pipe with lateral feeder pipes; or a geotextile drain strip in an 8-inch gravel backfill or drain rock bed; or longitudinal pipes in an 8-inch gravel backfill or drain rock with a collector pipe at the outlet end.

    - Upstream of detention, underdrain piping shall be sized to handle double the two-year return frequency flow indicated by the WWHM (the doubling factor is a factor of safety). Downstream of detention the underdrain piping shall be sized for the two-year return frequency flow indicated by the WWHM. In both instances there shall be at least one foot of hydraulic head above the invert of the upstream end of the collector pipe.
    - Internal diameters of underdrain pipes shall be a minimum of six inches having two rows of ½-inch holes spaced 6 inches apart longitudinally (maximum), with rows 120 degrees apart (laid with holes downward). Maximum perpendicular distance between two feeder pipes must be 15 feet. All piping is to be schedule 40 PVC or greater wall thickness. Drain piping could be installed in basin and trench configurations. Other equivalent underdrains can be used.
    - Main collector underdrain pipe shall be at a slope of 0.5 percent minimum.
    - A geotextile fabric (specifications in Appendix C) must be used between the sand layer and drain rock or gravel and placed so that 1-inch of drain rock/gravel is above the fabric. Drain rock shall be 0.75-1.5 inch rock or gravel backfill, washed free of clay and organic material.

10. Provide cleanout wyes with caps or junction boxes at both ends of the collector pipes. Extend cleanouts to the surface of the filter. Provide a valve box for access to the cleanouts. Provide access for cleaning all underdrain piping. This may consist of installing cleanout ports that tee into the underdrain system and surface above the top of the sand bed. To facilitate maintenance of the sand filter an inlet shutoff/bypass valve is recommended.

11. Sand specification: The sand in a filter must meet the size gradation (by weight) given in Table V-6-7. The contractor must obtain a grain size analysis from the supplier to certify that the No. 100 and No. 200 sieve requirements are met.

Table V-6-7. Sand Specifications

U.S. Sieve Number	Percent Passing
4	95-100
8	70-100
16	40-90
30	25-75
50	2-25
100	<4
200	<2

Source: King County Surface Water Design Manual, September 1998

12. Impermeable Liners for Sand Bed Bottom: Impermeable liners are generally required for soluble pollutants such as metals and toxic organics and where the underflow could cause problems with structures. Impermeable liners may be made of clay, concrete or geomembrane. Clay liners shall have a minimum thickness of 12 inches and meet the specifications given in Table V-6-8.

Table V-6-8. Clay Liner Specifications

Property	Test Method	Unit	Specification
Permeability	ASTM D-2434	cm/sec	1×10^{-6} max.
Plasticity Index of Clay	ASTM D-423 & D-424	percent	Not less than 15
Liquid Limit of Clay	ASTM D-2216	percent	Not less than 30
Clay Particles Passing	ASTM D-422	percent	Not less than 30
Clay Compaction	ASTM D-2216	percent	95% of Standard Proctor Density

Source: City of Austin, 1988

- If a geomembrane liner is used it shall have a minimum thickness of 30 mils and be ultraviolet light resistant. The geomembrane liner shall be protected from puncture, tearing, and abrasion by installing geotextile fabric on the top and bottom of the geomembrane.

- Concrete liners may also be used for sedimentation chambers and for sedimentation and sand filtration basins less than 1,000 square feet in area. Concrete shall be 5 inches thick Class A or better and shall be reinforced by steel wire mesh. The steel wire mesh shall be 6 gauge wire or larger and 6-inch by 6-inch mesh or smaller. An "Ordinary Surface Finish" is required. When the underlying soil is clay or has an unconfined compressive strength of 0.25 ton per square foot or less, the concrete shall have a minimum 6-inch compacted aggregate base. This base must consist of coarse sand and river stone, crushed stone or equivalent with diameter of 0.75- to 1-inch.
- If an impermeable liner is not required then a geotextile fabric liner shall be installed that retains the sand and meets the specifications listed in Appendix C unless the basin has been excavated to bedrock.
- If an impermeable liner is not provided, then an analysis shall be made of possible adverse effects of seepage zones on groundwater, and near building foundations, basements, roads, parking lots and sloping sites. Sand filters without impermeable liners shall not be built on fill sites and shall be located at least 20-feet downslope and 100-feet upslope from building foundations.

13. Include an access ramp with a slope not to exceed 7H:1V, or equivalent, for maintenance purposes at the inlet and the outlet of a surface filter.

14. Side slopes for earthen/grass embankments shall not exceed 3H:1V to facilitate mowing.

15. There shall be at least 2 feet clearance between the seasonal high groundwater level and the bottom of the sand filter.

6.6 Construction Criteria

- The sand filter shall not be placed into service until site construction is complete and the site is stabilized.
- Place sand in a uniform thickness and compact using a water settling method. Settling shall be accomplished by flooding the sand with 10-15 gallons of water per cubic foot of sand. After flooding, the sand shall be smoothed and leveled.

6.7 Maintenance Criteria

Inspections of sand filters and pretreatment systems shall be conducted every 6 months and after storm events as needed during the first year of operation, and annually thereafter. Maintenance suggestions include:

- Remove accumulated silt and debris on top of the sand filter when depth exceeds 1/2-inch. Scrape the silt off during dry periods with steel rakes or other devices.

- Frequent overflow or slow drawdown are indicators of plugging problems. A sand filter shall empty in 24 hours following a storm event (24 hours for the pre-settling chamber), depending on the ponding depth over the filter bed surface. If the hydraulic conductivity drops to 1-inch per hour, corrective action is needed. Examples include:
    - Scraping the top layer of fine-grain sediment accumulation (mid-winter scraping is suggested)
    - Removal of thatch
    - Aerating the filter surface
    - Tilling the filter surface (late-summer rototilling is suggested)
    - Replacing the top 4 inches of sand.
    - Inspecting geotextiles for clogging.
- Rapid drawdown in the sand bed (greater than 12 inches per hour) indicates short-circuiting of the filter. Inspect the periphery of the filter bed and cleanouts on the underdrain pipes for leakage.
- Drawdown tests for the sand bed shall be conducted every two years. These tests can be conducted by allowing the filter to fill (or partially fill) during a storm event, then measuring the decline in water level over a 4-8 hour period. An inlet and an underdrain outlet valve would be necessary to conduct such a test.
- Formation of rills and gullies on the surface of the filter indicates improper function of the inlet flow spreader, or poor sand compaction. Check for accumulation of debris on or in the flow spreader and refill rills and gullies with sand.

6.7.1 BMP T810 Sand Filter Vault

6.7.1.1 Description: (Figure V-6-13 and Figure V-6-14)

A sand filter vault is similar to an open sand filter except that the sand layer and underdrains are installed below grade in a vault. It consists of presettling and sand filtration cells.

6.7.1.2 Applications and Limitations

- Use where space limitations preclude above ground facilities
- Not suitable where high water table and heavy sediment loads are expected
- An elevation difference of 4 feet between inlet and outlet is needed

6.7.1.3 Additional Design Criteria for Vaults

- Optimize sand inlet flow distribution with minimal sand bed disturbance. A maximum 8-inch distance between the top of the spreader and the top of the sand bed is required. Flows may enter the sand bed by spilling over the top of the wall into a flow spreader pad or alternatively a pipe and manifold system may be used. Any pipe and manifold system must retain the required dead storage volume in the first cell, minimize turbulence, and be readily maintainable.
- If an inlet pipe and manifold system is used, the minimum pipe size shall be 8 inches. Multiple inlets are required to minimize turbulence and reduce local flow velocities.
- Provide erosion protection along the first foot of the sand bed adjacent to the spreader. Geotextile fabric secured on the surface of the sand bed, or equivalent method, may be used.
- Design the presettling cell for sediment collection and removal. Use a V-shaped bottom, removable bottom panels, or equivalent sludge handling system. Provide one-foot of sediment storage in the presettling cell.
- Seal the pre-settling chamber to trap oil and trash. This chamber is usually connected to the sand filtration chamber using a pipe with an inverted elbow to protect the filter surface from oil and trash.
- If a retaining baffle is necessary for oil/floatables in the presettling cell, it must extend at least one foot above to one foot below the design flow water level. Provide provision for the passage of flows in the event of plugging. Provide access opening and ladder on both sides of the baffle.
- To prevent anoxic conditions, provide a minimum of 24 square feet of ventilation grate for each 250 square feet of sand bed surface area. For sufficient distribution of airflow across the sand bed, grates may be located in one area if the sand filter is small, but placement at each end is preferred. Small grates may also be dispersed over the entire sand bed area.
- Sand filter vaults must conform to the materials and structural suitability criteria specified for wet vaults in Chapter 8.
- Provide a sand filter inlet shutoff/bypass valve for maintenance

- A geotextile fabric over the entire sand bed may be installed that is flexible, highly permeable, three-dimensional matrix, and adequately secured. This is useful in trapping trash and litter.

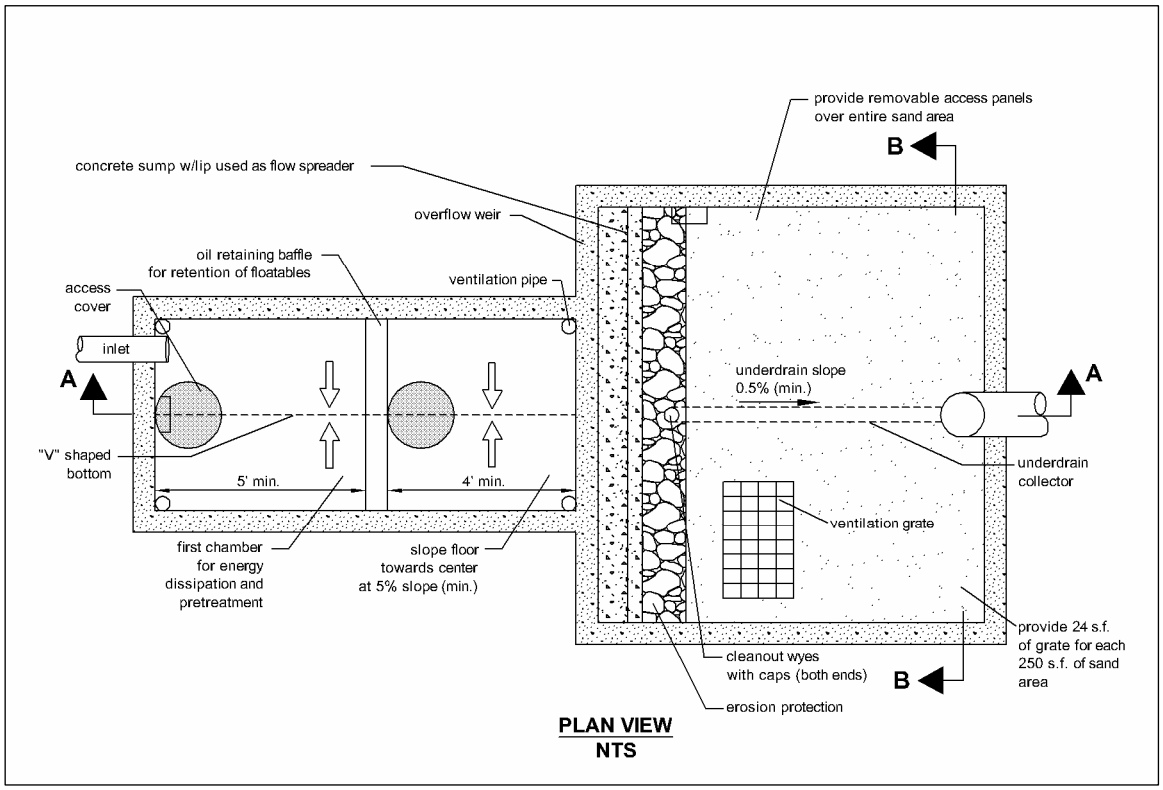

Figure V-6-13. Sand Filter Vault (top view)

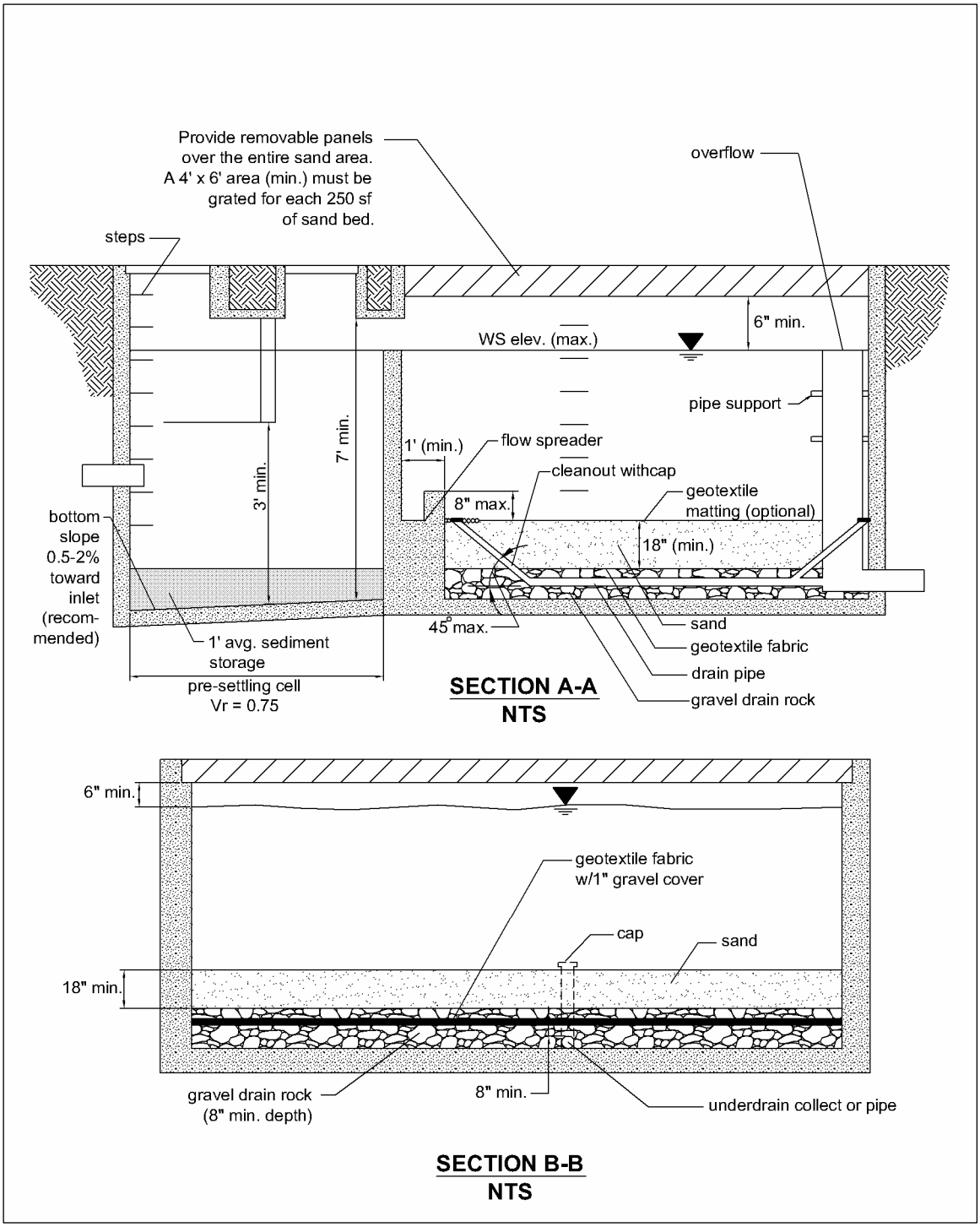

Figure V-6-14. Sand Filter Vault (side view)

6.7.2 BMP T820 Linear Sand Filter

6.7.2.1 Description

Linear sand filters are typically long, shallow, two-celled, rectangular vaults. The first cell is designed for settling coarse particles, and the second cell contains the sand bed. Stormwater enters the second cell via a weir section that also functions as a flow spreader.

Figure V-6-15 illustrates a linear sand filter.

6.7.2.2 Application and Limitations

- Applicable in long narrow spaces such as the perimeter of a paved surface.
- As a part of a treatment train such as downstream of a filter strip, upstream of an infiltration system, or upstream of a wet pond or a biofilter for oil control.
- To treat small drainages (less than 2 acres of impervious area).
- To treat runoff from high-use sites for TSS and oil/grease removal, if applicable.

6.7.2.3 Additional Design Criteria for Linear Sand Filters

- Divide the two cells by a divider wall that is level and extends a minimum of 12 inches above the sand bed.
- Stormwater may enter the sediment cell by sheet flow or a piped inlet.
- The width of the sand cell must be 1-foot minimum to 15 feet maximum.
- The sand filter bed must be a minimum of 12 inches deep and have an 8-inch layer of drain rock with perforated drainpipe beneath the sand layer.
- The drainpipe must be 6-inch diameter minimum and be wrapped in geotextile and sloped a minimum of 0.5 percent to promote positive drainage.
- Maximum sand bed ponding depth: 12 inches.
- Must be vented as described above for sand filter vaults.
- Linear sand filters must conform to the materials and structural suitability criteria specified for wet vaults described in Chapter 8.
- Sediment cell width shall be selected based on sand filter width as follows:

Sand filter width, (w) inches	12-24	24-48	48-72	72+
Sediment cell width, inches	12	18	24	w/3

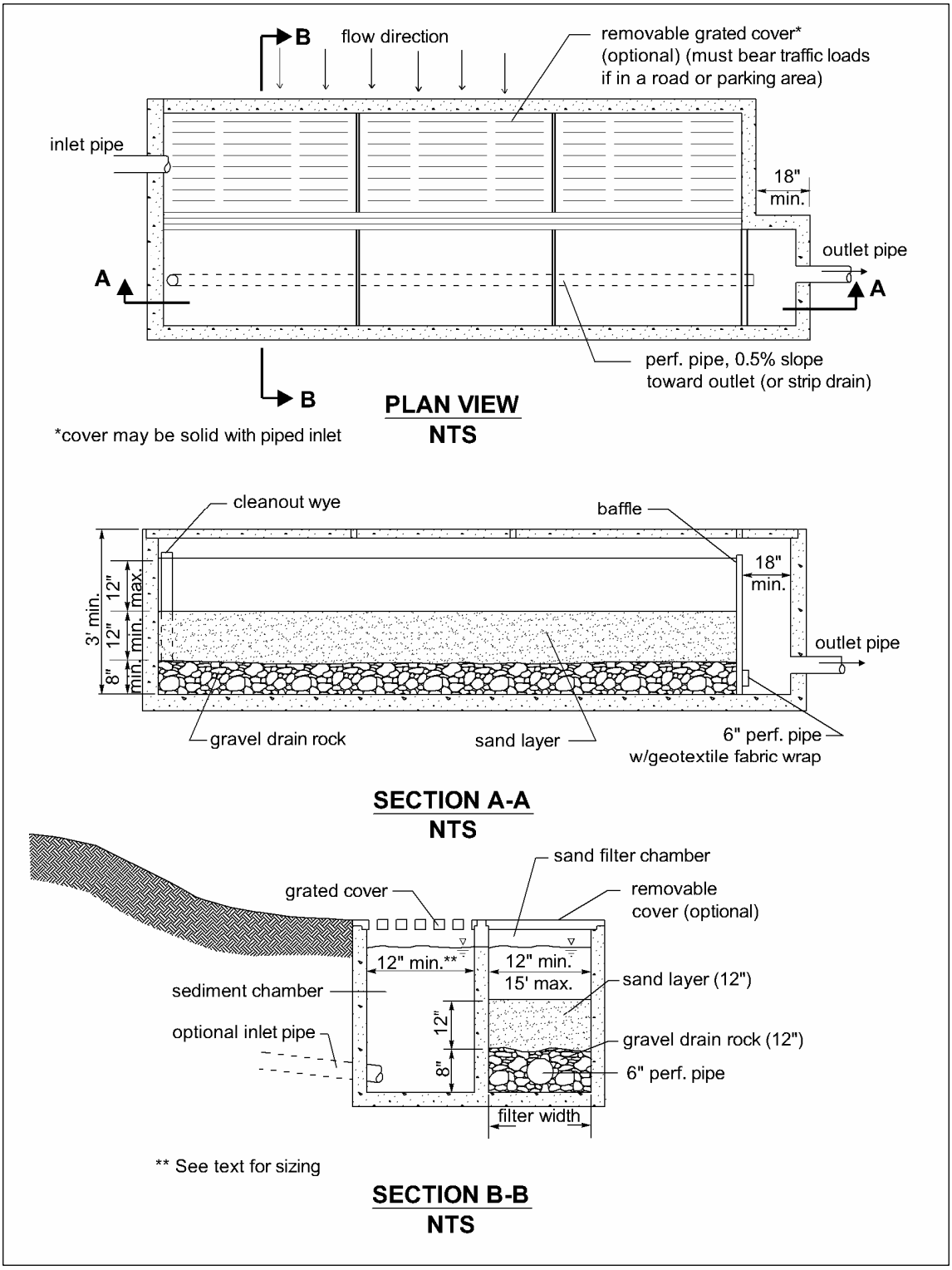

Figure V-6-15. Linear Sand Filter

Chapter 7 Biofiltration Treatment Facilities

7.1 Purpose

This chapter addresses five Best Management Practices (BMPs) that are classified as biofiltration treatment facilities.

Biofilters are vegetated treatment systems (typically grass) that remove pollutants by means of sedimentation, filtration, soil sorption, and/or plant uptake. They are typically configured as swales or flat filter strips.

The BMPs discussed in this chapter are designed to remove low concentrations and quantities of total suspended solids (TSS), heavy metals, petroleum hydrocarbons, and/or nutrients from stormwater.

7.2 Applications

A biofilter can be used as a basic treatment BMP for stormwater runoff from roadways, driveways, parking lots, and highly impervious ultra-urban areas or as the first stage of a treatment train. In cases where hydrocarbons, high TSS concentrations, or debris would be present in the runoff, such as high-use sites, a pretreatment system for those components is necessary. Placement of the biofilter in an off-line location is preferred to avoid flattening of the vegetation and the erosive effects of high flows.

7.3 Site Suitability

The following factors must be considered for determining site suitability:

- Accessibility for operation and maintenance.
- Suitable growth environment (soil, exposure to sunlight, etc.) for the vegetation.
- Adequate siting for a pre-treatment facility if high petroleum hydrocarbon levels (oil/grease) or high TSS loads could impair treatment capacity or efficiency.

7.4 Best Management Practices

The following five Biofiltration Treatment Facilities BMPs are discussed in this chapter:

BMP T910 – Basic Biofiltration Swale
BMP T920 – Wet Biofiltration Swale
BMP T930 – Continuous Inflow Biofiltration Swale
BMP T940 – Basic Filter Strip & Compost-Amended Filter Strip
BMP T950 – Narrow Area Filter Strip

7.4.1 BMP T910 Basic Biofiltration Swale

7.4.1.1 Description:

Biofiltration swales are typically shaped as a trapezoid or a parabola in cross section as shown in Figure V-7-16 and Figure V-7-17.

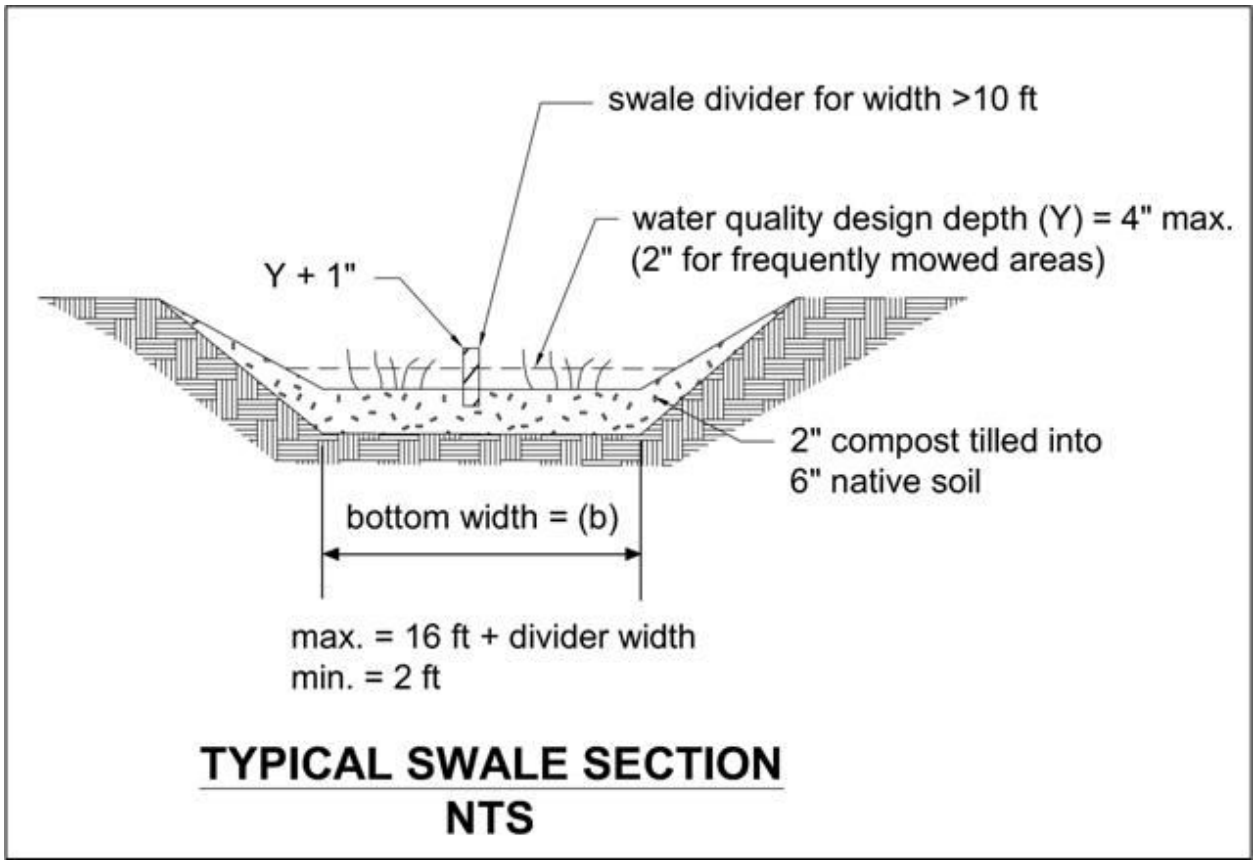

Figure V-7-16. Typical Swale Section

7.4.1.2 Design Criteria:

- Size the swale using sizing criteria specified in Table V-7-9. Minimum length shall be 100 feet.
- Check the hydraulic capacity/stability using Q_{max}.
- Select a vegetation cover suitable for the site. Refer to Table V-7-12 through Table V-7-14.
- Install level spreaders (minimum 1 inch gravel) at the head of all swales, and every 50 feet in swales of ≥4 feet width. Include sediment cleanouts (weir, settling basin, or equivalent) at the head of the biofilter as needed.

- Use energy dissipaters (such as quarry spalls or riprap) for increased downslopes.
- A minimum of ten feet (10') shall be provided between the outside edge of the bioswale and any property line or obstruction that would impede maintenance.

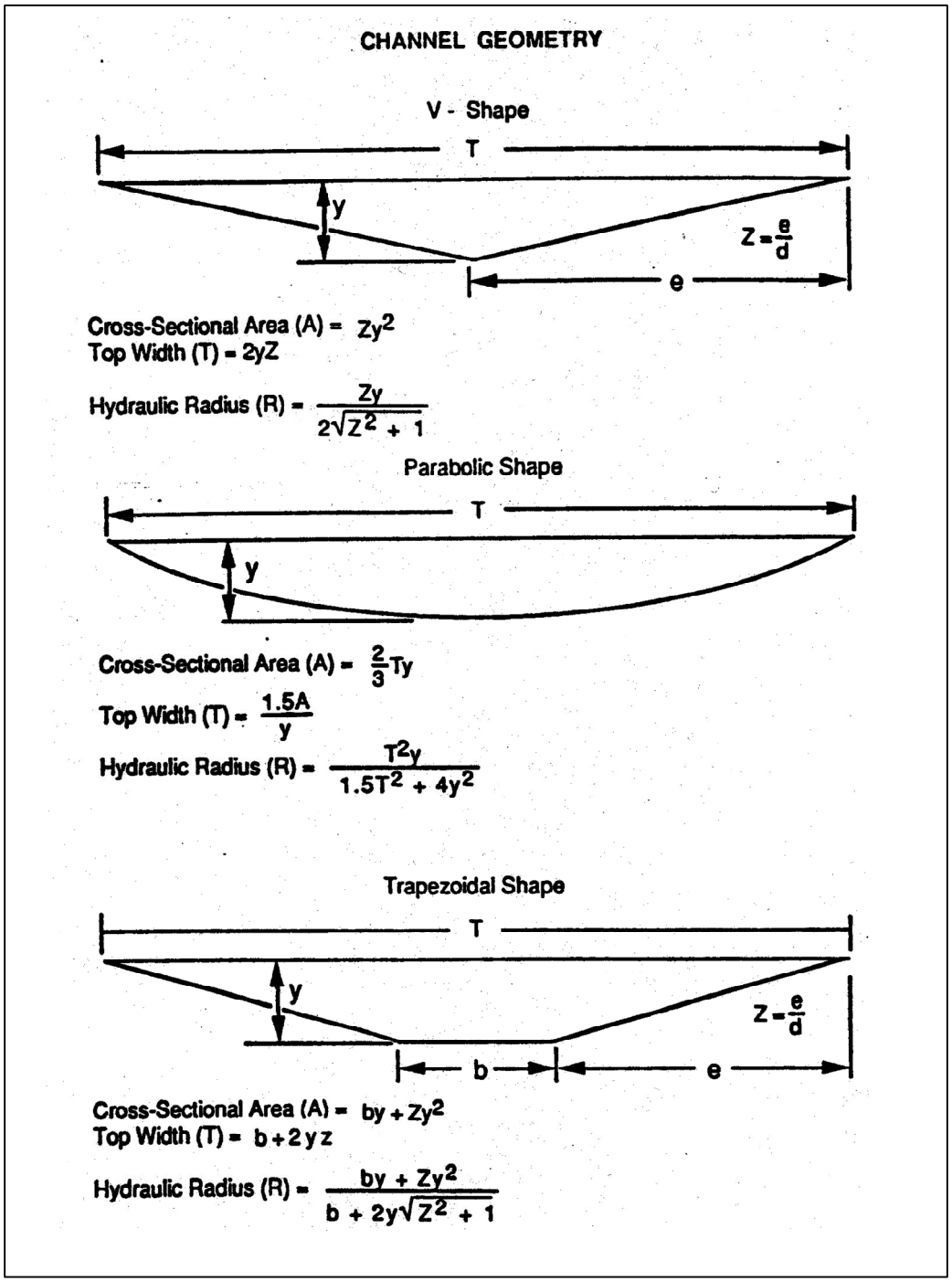

Source: Livingston, et al, 1984

Figure V-7-17. Geometric Formulas for Common Swale Shapes

Table V-7-9. Sizing Criteria

Design parameter	BMP T 910-Biofiltration swale	BMP T 940-Filter strip
Longitudinal Slope	0.015 - 0.025[1]	0.01 - 0.15
Maximum velocity	1 ft / sec @ K[2] multiplied by the WQ design flow rate	0.5 ft / sec @ K multiplied by the WQ design flow rate
Maximum velocity for channel stability[3]	3 ft/sec	---
Maximum water depth[4]	2”- if mowed frequently; 4” if mowed infrequently	1-inch max.
Manning coefficient	(0.2 – 0.3)[5] (0.24 if mowed infrequently)	0.35 (0.45 if compost amended, or mowed to maintain grass height ≤ 4”)
Bed width (bottom)	(2 - 10 ft)[6]	---
Freeboard height	0.5 ft	---
Minimum hydraulic residence time at K multiplied by Water Quality Design Flow Rate	9 minutes (18 minutes for continuous inflow)	9 minutes
Minimum length	100 ft	Sufficient to achieve hydraulic residence time in the filter strip
Maximum sideslope	3 H:1 V 4H:1V preferred	Inlet edge ≥ 1” lower than contributing paved area
Max. tributary drainage flowpath	---	150 feet
Max. longitudinal slope of contributing area	---	0.05 (steeper than 0.05 need upslope flow spreading and energy dissipation)
Max. lateral slope of contributing area	---	0.02 (at the edge of the strip inlet)

[1] For swales, if the slope is less than 1.5% install an underdrain using a perforated pipe, or equivalent. Amend the soil if necessary to allow effective percolation of water to the underdrain. Install the low-flow drain 6-inches deep in the soil. Slopes greater than 2.5% need check dams (riprap) at vertical drops of 12-15 inches. Underdrains can be made of 6-inch Schedule 40 PVC perforated pipe or equivalent with 6” of drain gravel on the pipe. The gravel and pipe must be enclosed by geotextile fabric (see Figure V-7-19 and Figure V-7-20).

[2] K=A ratio of the peak 10-minunte flow predicted by SBUH to the water quality design flow rate estimated using the WWHM. The value of K for off-line systems is 3.5, and for on-line systems is 2.0 in the City of Auburn.

[3] Maximum flowrate for channel stability shall be the 100-year, 24-hour discharge (Q_{100}) calculated with WWHM using a 15-minute time step. If an hourly time step is used, multiply the Q_{100} by 1.6.

[4] Below the design water depth install an erosion control blanket, at least 4” of topsoil, and the selected biofiltration mix. Above the water line use a straw mulch or sod.

[5] This range of Manning’s n can be used in the equation; $b = Qn/1.49y^{(1.67)} s^{(0.5)} – Zy$ with wider bottom width b, and lower depth, y, at the same flow. This provides the designer with the option of varying the bottom width of the swale depending on space limitations. Designing at the higher n within this range at the same flow decreases the hydraulic design depth, thus placing the pollutants in closer contact with the vegetation and the soil.

[6] For swale widths up to 16 feet the cross-section can be divided with a berm (concrete, plastic, compacted earthfill) using a flow spreader at the inlet (Figure V-7-21).

7.4.1.3 Bypass Guidance

Most biofiltration swales are currently designed to be on-line facilities. However, an off-line design is possible. Swales designed in an off-line mode should not engage a bypass until the flow rate exceeds a value determined by multiplying Q, the off-line water quality design flow rate predicted by the WWHM, by 3.5 for off-line systems and 2.0 for on-line systems. This modified design flow rate is an estimate of the design flow rate determined by using SBUH procedures. Ecology's intent is to maintain recent biofiltration sizing recommendations until more definitive information is collected concerning bioswale performance. The only advantage of designing a swale to be off-line is that the stability check, which may make the swale larger, is not necessary.

7.4.1.4 Sizing Procedure for Biofiltration Swales

Preliminary Steps

P.1 Determine the water quality design flow rate (Q) in 15-minute time steps using WWHM.

P.2 Establish the longitudinal slope of the proposed biofilter.

P.3 Select an appropriate vegetated cover for the site. Refer to Table V-7-12 through Table V-7-14.

Design Steps

D.1 Select the type of vegetation and depth of flow (based on frequency of mowing and type of vegetation).

D.2 Select a value of Manning's n.

D.3 Select swale shape.

D.4 Use a variation on Manning's equation to solve for bottom width, b.

$$b \approx \frac{2.5Qn}{1.49y^{1.67}s^{0.5}} - Zy$$

Where:

Q = Water Quality Design flow rate in 15-minute time steps based on WWHM, (ft^3/s, cfs)
n = Manning's n (dimensionless)
s = Longitudinal slope as a ratio of vertical rise/horizontal run (dimensionless)
y = depth of flow (ft)
b = bottom width of trapezoid (ft)

For a trapezoid, select a side slope Z of at least 3. Compute b and then top width T, where T = b + 2yZ.

NOTE: Adjustment factor of 2.5 accounts for the differential between Water Quality design flow rate and the SBUH design flow. This equation is used to estimate an initial cross-sectional area. It does not affect the overall biofiltration swale size.

If b for a swale is greater than 10 ft, either investigate how Q can be reduced, divide the flow by installing a low berm, or arbitrarily set b = 10 ft and continue with the analysis. For other swale shapes refer to Figure V-7-17.

D.5 Compute A

$A_{rectangle} = Ty$ or $A_{trapezoid} = by + Zy^2$

$A_{filter\ strip} = Ty$

Where:
A = cross-sectional area (ft²)
T = top width of trapezoid or width of a rectangle (ft)
y = depth of flow (ft)
b = bottom width of trapezoid (ft)
Z = side slope

D.6 Compute the flow velocity at design flow rate:

V = K (Q/A)

A = cross-sectional area (ft^2)

K = A ratio of the peak 10-minute flow predicted by SBUH to the water quality design flow rate estimated using the WWHM. The value of K for off-line systems is 3.5 and for on-line systems is 2.0

Q = water quality design flow rate in 15-minute time steps based on WWHM.

If V >1.0 ft/sec (or V>0.5 ft/sec for a filter strip), repeat steps D-1 to D-6 until the condition is met. A velocity greater than 1.0 ft/sec was found to flatten grasses, thus reducing filtration. A velocity lower than this maximum value will allow a 9-minute hydraulic residence time criterion in a shorter biofilter. If the value of V suggests that a longer biofilter will be needed than space permits, investigate how Q can be reduced (e.g., use of low impact development BMPs), or increase y and/or T (up to the allowable maximum values) and repeat the analysis.

D.7 Compute the swale length (L, ft)

L = Vt (60 sec/min)

Where: t = hydraulic residence time (min)
V = flow velocity

Use t = 9 minutes for this calculation (use t = 18 minutes for a continuous inflow biofiltration swale). If a biofilter length is greater than the space permits, follow the advice in step 6.

If a length less than 100 feet results from this analysis, increase it to 100 feet, the minimum allowed. In this case, it may be possible to save some space in width and still meet all criteria. This possibility can be checked by computing V in the 100 ft biofilter for t = 9 minutes, recalculating A (if V < 1.0 ft/sec) and recalculating T.

D.8 If there are space constraints, the local government and the project proponent should consider the following solutions (listed in order of preference):

a. Divide the site drainage to flow to multiple biofilters.
b. Use infiltration to provide lower discharge rates to the biofilter (only if the Site Suitability Criteria in Section 5.3 of this volume are met).
c. Increase vegetation height and design depth of flow (note: the design must ensure that vegetation remains standing during design flow).
d. Reduce the developed surface area to gain space for biofiltration.
e. Increase the longitudinal slope.
f. Increase the side slopes.
g. Nest the biofilter within or around another BMP.

Stability Check Steps

The stability check must be performed for the combination of highest expected flow and least vegetation coverage and height. A check is not required for biofiltration swales that are located "off-line" from the primary conveyance/detention system. Maintain the same units as in the biofiltration capacity analysis.

The maximum permissible velocity for erosion prevention (Vmax) is 3 feet per second.

S.1 Perform the stability check for the 100-year, return frequency flow using 15-minute time steps using WWHM. The designer can use the WWHM 100-yr. hourly peak flows times an adjustment factor of 1.6 to approximate peak flows in 15-minute time steps.

S.2 Estimate the vegetation coverage ("good" or "fair") and height on the first occasion that the biofilter will receive flow, or whenever the coverage and height will be least. Avoid flow introduction during the vegetation establishment period by timing planting.

S.3 Estimate the degree of retardance from Table V-7-10. When uncertain, be conservative by selecting a relatively low degree of retardance.

Table V-7-10. Stability Check Steps (SC)
Guide for Selecting Degree of Retardance

Coverage	Average Grass Height (inches)	Degree of Retardance
Good	≤ 2	E. Very Low
	2-6	D. Low
	6-10	C. Moderate
	11-24	B. High
	≥ 30	A. Very High
Fair	≤ 2	E. Very Low
	2-6	D. Low
	6-10	D. Low
	11-24	C. Moderate
	≥ 30	B. High

* See Chow (1959), In addition, Chow recommended selection of retardance C for a grass-legume mixture 6-8 inches high and D for a mixture 4-5 inches high. No retardance recommendations have appeared for emergent wetland species. Therefore, judgment must be used. Since these species generally grow less densely than grasses, using a "fair" coverage would be a reasonable approach.

S.4 Select a trial Manning's n for the high flow condition. The minimum value for poor vegetation cover and low height (possibly, knocked from the vertical by high flow) is 0.033. A good initial choice under these conditions is 0.04.

S.5 Refer to Figure V-7-18 to obtain a first approximation for VR.

S.6 Compute hydraulic radius, R, from VR in Figure V-7-18 and a Vmax in Table V-7-11.

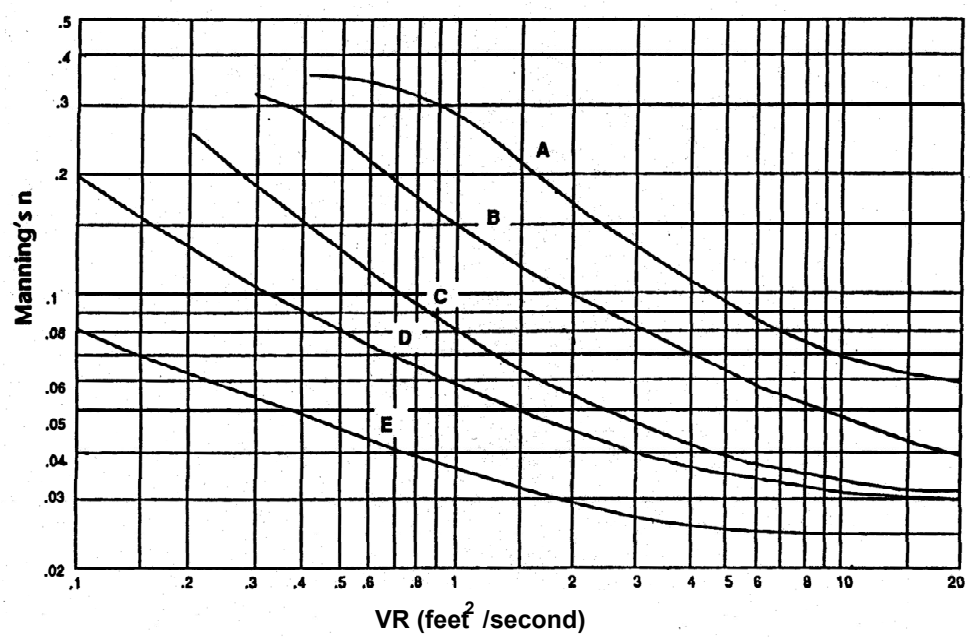

Source: Livingston, et al, 1984

Figure V-7-18. The Relationship of Manning's n with VR for Various Degrees of Flow Retardance (A-E)

Table V-7-11. Guide to Selecting Maximum Permissible Swale Velocities for Stability*

Cover	Slope (percent)	Max Velocity – ft/sec (m/sec)	
		Erosion-Resistant Soils	Easily Eroded Soils
Kentucky bluegrass Tall fescue	0-5	6 (1.8)	5 (1.5)
Kentucky bluegrass Ryegrasses Western wheatgrass	5-10	5 (1.5)	4 (1.2)
Grass-legume mixture	0-5	5 (1.5)	4 (1.2)
	5-10	4 (1.2)	3 (0.9)
Red fescue	0-5	3 (0.9)	2.5 (0.8)
Redtop	5-10	Not recommended	Not recommended

* Adapted from Chow (1959), Livingston et al (1984), and Goldman et al (1986)

S.7 Use Manning's equation to solve for the actual VR.

S.8 Compare the actual VR from step S.7 and first approximation from step S.5. If they do not agree within 5 percent, repeat steps S.4 to S.8 until acceptable agreement is reached. If n<0.033 is needed to get agreement, set n = 0.033, repeat step S.7, and then proceed to step S.9.

S.9 Compute the actual V for the final design conditions:

S.10 Check to be sure $V < V_{max\ of\ 3\ feet/second}$.

S.11 Compute the required swale cross-sectional area, A, for stability:

S.12 Compare the A, computed in step S.11 of the stability analysis, with the A from the biofiltration capacity analysis (step D.5).

If less area is required for stability than is provided for capacity, the capacity design is acceptable. If not, use A from step S.11 of the stability analysis and recalculate channel dimensions.

S.13 Calculate the depth of flow at the stability check design flow rate condition for the final dimensions and use A from step S.11.

S.14 Compare the depth from step S.13 to the depth used in the biofiltration capacity design (Step D.1). Use the larger of the two and add 0.5 ft. of freeboard to obtain the total depth (y_t) of the swale. Calculate the top width for the full depth using the appropriate equation.

SC.15 Recalculate the hydraulic radius: (use b from Step D.4 calculated previously for biofiltration capacity, or Step S.12, as appropriate, and y_t = total depth from Step S.14)

SC.16 Make a final check for capacity based on the stability check design storm (this check will ensure that capacity is adequate if the largest expected event coincides with the greatest retardance). Use Equation 1, a Manning's n selected in step D.2, and the calculated channel dimensions, including freeboard, to compute the flow capacity of the channel under these conditions. Use R from step SC-14, above, and $A = b(y_t) + Z(y_t)^2$ using b from Step D.4, D.15, or S.12 as appropriate.

If the flow capacity is less than the stability check design storm flow rate, increase the channel cross-sectional area as needed for this conveyance. Specify the new channel dimensions.

Completion Step

Review all of the criteria and guidelines for biofilter planning, design, installation, and operation above and specify all of the appropriate features for the application.

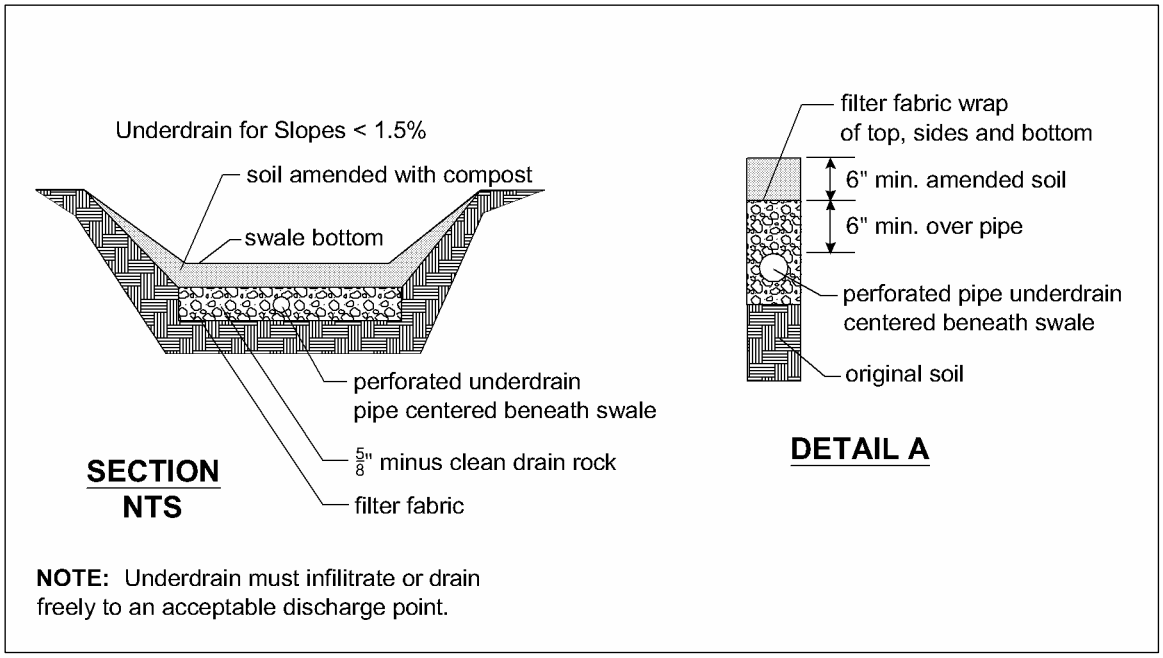

Figure V-7-19. Biofiltration Swale Underdrain Detail

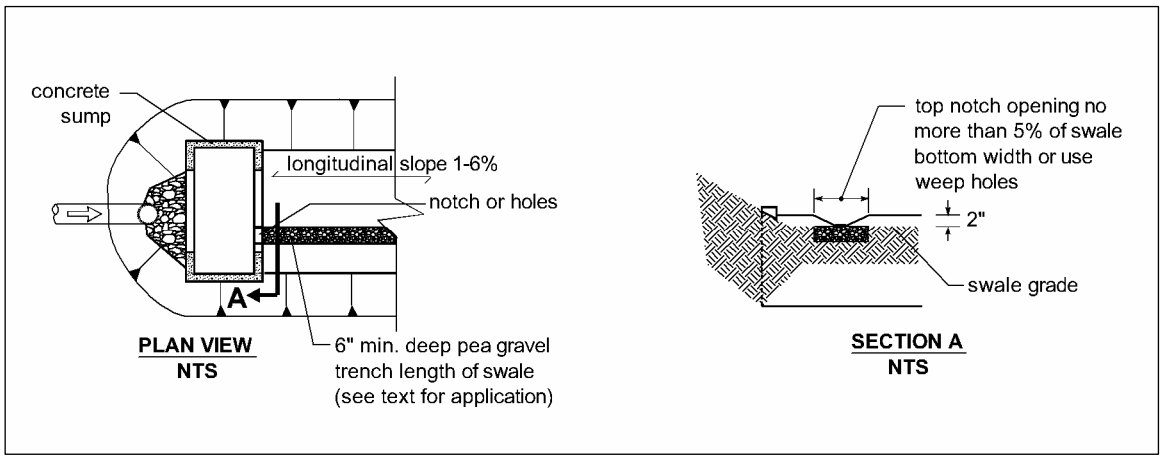

Figure V-7-20. Biofiltration Swale Low-Flow Drain Detail

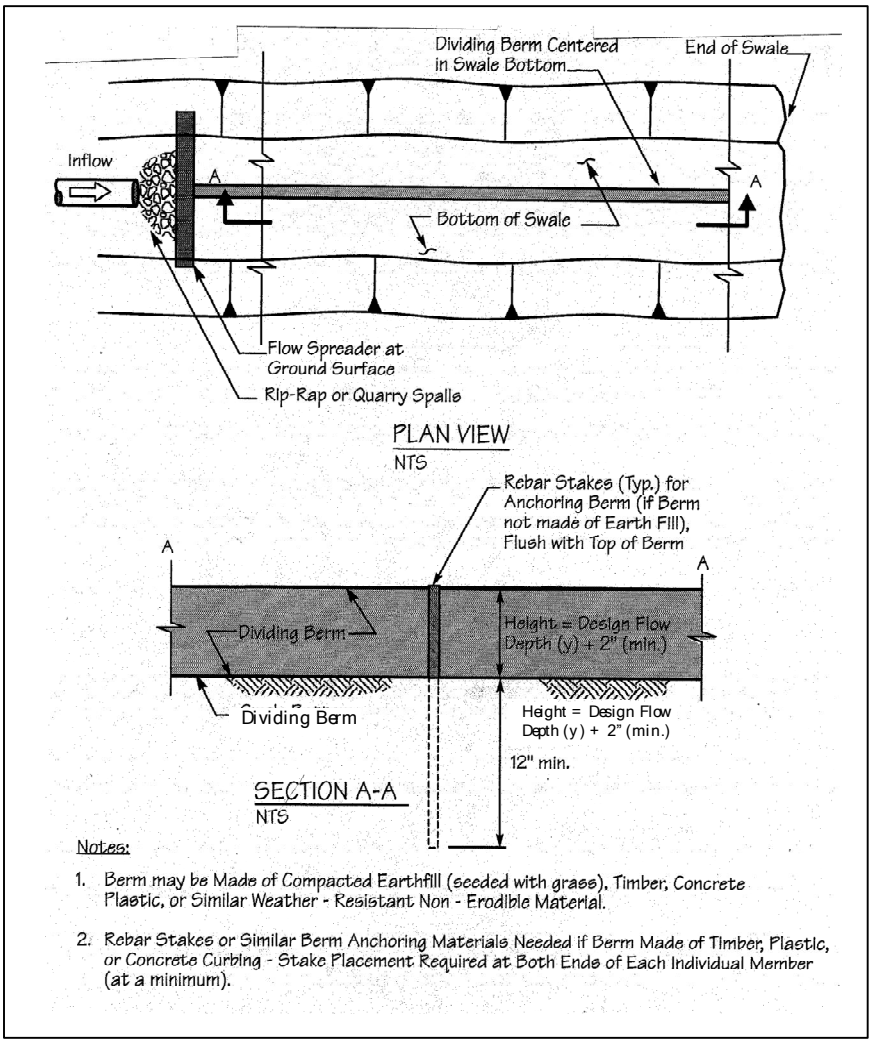

Figure V-7-21. Swale Dividing Berm

7.4.1.5 Soil Criteria

- Use the following list as a guide for choosing appropriate soils for the biofiltration swale. Use at least 8-inches of the following top soil mix:
  - Sandy loam 60-90%
  - Clay 0-10%
  - Composted organic matter, (excluding animal waste, toxics) 10-30%
- Use compost amended soil where practicable.
- Till to at least 8-inch depth.
- For longitudinal slopes of < 2 percent use more sand to obtain more infiltration.
- If groundwater contamination is a concern, seal the bed with clay or a geomembrane liner.

7.4.1.6 Vegetation Criteria

- See Table V-7-12 through Table V-7-14 for recommended grasses, wetland plants, and groundcovers.
- Select fine, turf-forming, water-resistant grasses where vegetative growth and moisture will be adequate for growth.
- Irrigate if moisture is insufficient during dry weather season.
- Use sod with low clay content and where needed to initiate adequate vegetative growth. Preferably sod should be laid to a minimum of one-foot vertical depth above the swale bottom.
- Consider sun/shade conditions for adequate vegetative growth and avoid prolonged shading of any portion not planted with shade tolerant vegetation.
- Stabilize soil areas upslope of the biofilter to prevent erosion.
- Fertilizing a biofilter shall not be allowed.

7.4.1.7 Construction Criteria

- Do not put swale into operation until exposed soil in contributing drainage area is stabilized.
- Keep erosion and sediment control measures in place until swale vegetation is established.
- Avoid compaction during construction.
- Grade biofilters to attain uniform longitudinal and lateral slopes.

7.4.1.8 Maintenance Criteria

- Inspect biofilters at least once every 6 months, preferably during storm events, and also after storm events of > 0.5 inch rainfall/ 24 hours. Maintain adequate grass growth and eliminate bare spots.
- Mow grasses, if needed for good growth. Typically maintain at 4 – 9 inches but not below design flow level.
- Remove sediment as needed at head of the swale if grass growth is inhibited in greater than 10 percent of the swale, or if the sediment is blocking the distribution and entry of the water.
- Remove leaves, litter, and oily materials, and re-seed or resod, and regrade, as needed. Clean curb cuts and level spreaders as needed.

  Prevent scouring and soil erosion in the biofilter. If flow channeling occurs, regrade and reseed the biofilter, as necessary.
- Maintain access to biofilter inlet, outlet, and to mowing (Figure V-7-22).
- If a swale is equipped with underdrains, vehicular traffic on the swale bottom (other than grass mowing equipment) shall be avoided to prevent damage to the drainpipes.

Table V-7-12. Grass Seed Mixes Suitable for Biofiltration Swale Treatment Areas

Mix 1		Mix 2	
75-80 percent	tall or meadow fescue	60-70 percent	tall fescue
10-15 percent	seaside/colonial bentgrass	10-15 percent	seaside/colonial bentgrass
5-10 percent	redtop	10-15 percent	meadow foxtail
		6-10 percent	alsike clover
		1-5 percent	marshfield big trefoil
		1-6 percent	redtop

Note: All percentages are by weight, based on Briargreen, Inc.

Table V-7-13. Groundcovers & Grasses Suitable for the Upper Side Slopes of a Biofiltration Swale in Western Washington

Groundcovers	
kinnikinnick*	*Arctostaphylos uva-ursi*
Epimedium	*Epimedium grandiflorum*
creeping forget-me-not	*Omphalodes verna*
--	*Euonymus lanceolata*
yellow-root	*Xanthorhiza simplissima*
--	*Genista*
white lawn clover	*Trifolium repens*
white sweet clover*	*Melilotus alba*
-------	*Rubus calycinoides*
strawberry*	*Fragaria chiloensis*
broadleaf lupine*	*Lupinus latifolius*
Grasses (drought-tolerant, minimum mowing)	
dwarf tall fescues	*Festuca* spp. (e.g., Many Mustang, Silverado)
hard fescue	*Festuca ovina duriuscula* (e.g., Reliant, Aurora)
tufted fescue	*Festuca amethystina*
buffalo grass	*Buchloe dactyloides*
red fescue*	*Festuca rubra*
tall fescue grass*	*Festuca arundinacea*
blue oatgrass	*Helictotrichon sempervirens*

* Good choices for swales with significant periods of flow, such as those downstream of a detention facility.

Table V-7-14. Recommended Plants for Wet Biofiltration Swale

Common Name	Scientific Name	Spacing (on center)
Shortawn foxtail	*Alopecurus aequalis*	seed
Water foxtail	*Alopecurus geniculatus*	seed
Spike rush	*Eleocharis spp.*	4 inches
Slough sedge*	*Carex obnupta*	6 inches or seed
Sawbeak sedge	*Carex stipata*	6 inches
Sedge	*Carex* spp.	6 inches
Western mannagrass	*Glyceria occidentalis*	seed
Velvetgrass	*Holcus mollis*	seed
Slender rush	*Juncus tenuis*	6 inches
Watercress*	*Rorippa nasturtium-aquaticum*	12 inches
Water parsley*	*Oenanthe sarmentosa*	6 inches
Hardstem bulrush	*Scirpus acutus*	6 inches
Small-fruited bulrush	*Scirpus microcarpus*	12 inches

* Good choices for swales with significant periods of flow, such as those downstream of a detention facility.

Cattail (Typha latifolia) is not appropriate for most wet swales because of its very dense and clumping growth habit which prevents water from filtering through the clump.

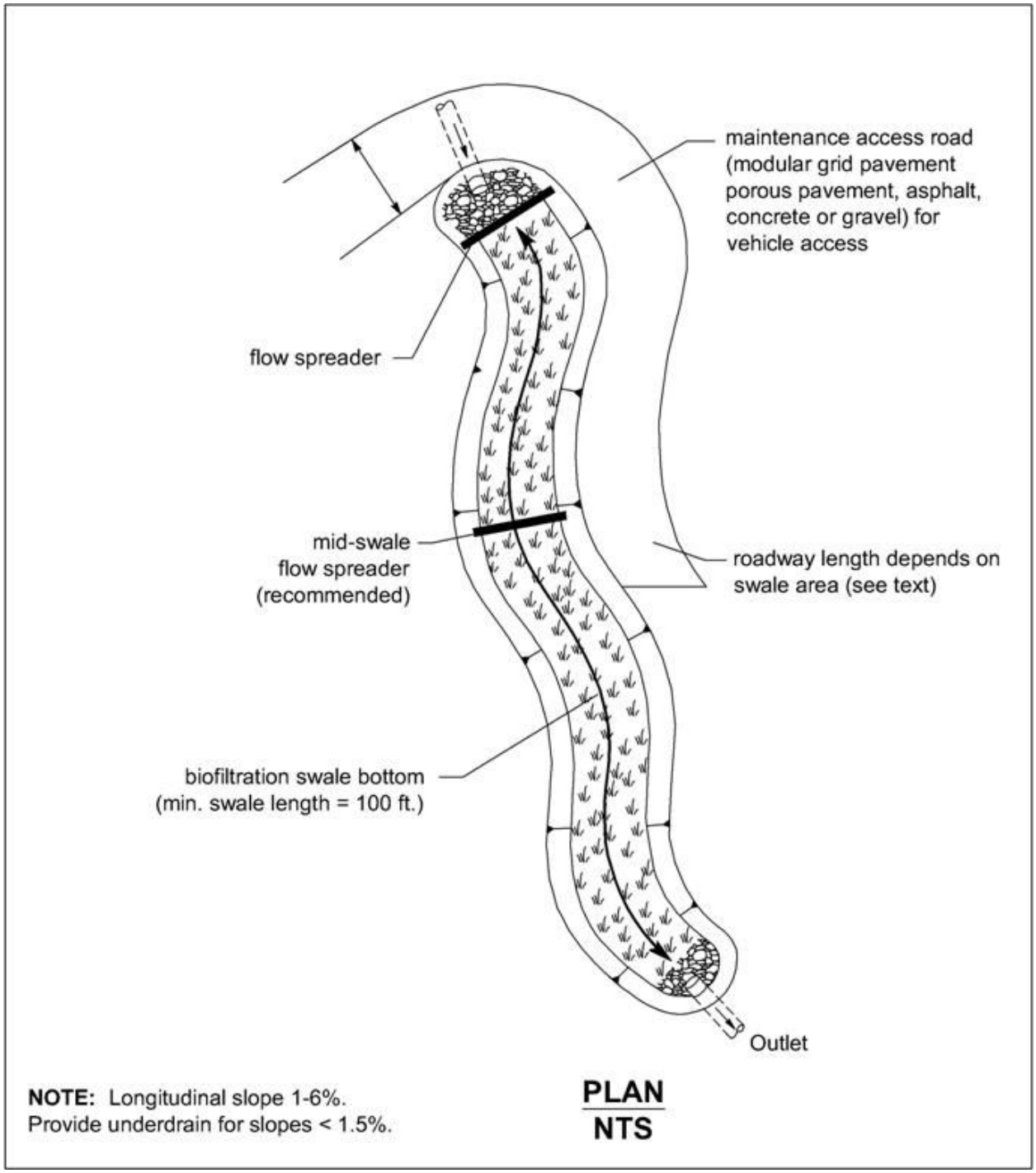

Figure V-7-22. Biofiltration Swale Access Features

7.4.2 BMP T920 Wet Biofiltration Swale

7.4.2.1 Description

A *wet biofiltration swale* is a variation of a basic biofiltration swale for use where the longitudinal slope is slight, water tables are high, or continuous low base flow is likely to result in saturated soil conditions. Where saturation exceeds about 2 weeks, typical grasses will die. Thus, vegetation specifically adapted to saturated soil conditions is needed. Different vegetation in turn requires modification of several of the design parameters for the basic biofiltration swale.

7.4.2.2 Performance Objectives

To remove low concentrations of pollutants such as TSS, heavy metals, nutrients, and petroleum hydrocarbons.

7.4.2.3 Applications/Limitations

Wet biofiltration swales are applied where a basic biofiltration swale is desired but not allowed or advisable because one or more of the following conditions exist:

- The swale is located on glacial till soils and is downstream of a detention pond providing flow control.
- Saturated soil conditions are likely because of seeps or base flows on the site.
- Longitudinal slopes shall be less than 2 percent.

7.4.2.4 Criteria

Use the same sizing and criteria as for basic biofiltration swales except for the following:

1. Adjust for extended wet season flow.

   - If the swale will be downstream of a detention pond or vault providing flow control, multiply the treatment area (bottom width times length) of the swale by 2, and readjust the swale length, if desired. Maintain a 5:1 length to width ratio.

2. Swale geometry.

   - The bottom width may be increased to 25 feet maximum, but a length-to-width ratio of 5:1 must be provided. No longitudinal dividing berm is needed.

     The minimum swale length is 100 feet.

   - If longitudinal slopes are greater than 2 percent, the wet swale must be stepped so that the slope within the stepped sections averages 2 percent. Steps may be made of retaining walls, log check dams, or short riprap sections. **No underdrain or low-flow drain is required**.

3. High-flow bypass

   - A high-flow bypass (i.e., an off-line design) is required for flows greater than the off-line water quality design flow that has been increased by 3.5. The bypass may be an open channel parallel to the wet biofiltration swale.

4. Water Depth and Base Flow

   - Design water depth shall be 4 inches for all wetland vegetation selections.
   - No underdrains or low-flow drains are required.

5. Flow Velocity, Energy Dissipation, and Flow Spreading

   - No flow spreader is required.

6. Access

   - Access is only required to the inflow and outflow of the swale. Access along the swale is not required.
   - Wheel strips may not be used for access.

7. Planting Requirements

   - A list of acceptable plants and recommended spacing is shown in Table V-7-14.
   - A wetland seed mix may be applied by hydroseeding, but if coverage is poor, planting of rootstock or nursery stock is required. Poor coverage is considered to be more than 30 percent bare area through the upper 2/3 of the swale after four weeks.

8. Maintenance Considerations

   - Mowing of wetland vegetation is not required. However, harvesting of very dense vegetation may be desirable in the fall after plant die-back to prevent the sloughing of excess organic material into receiving waters. Fall harvesting of *Juncus* species is not recommended.

7.4.3 BMP T930 Continuous Inflow Biofiltration Swale

7.4.3.1 Description:

In situations where water enters a biofiltration swale continuously along the side slope rather than discretely at the head, a different design approach–the continuous inflow biofiltration swale–is needed. The basic swale design is modified by increasing swale length to achieve an equivalent average residence time.

7.4.3.2 Applications

A continuous inflow biofiltration swale is to be used when inflows are not concentrated, such as locations along the shoulder of a road without curbs. This design may also be used where frequent, small point flows enter a swale, such as through curb inlet ports spaced at intervals along a road, or from a parking lot with frequent curb cuts. In general, no inlet port shall carry more than about 10 percent of the flow.

A continuous inflow swale is not appropriate for a situation in which significant lateral flows enter a swale at some point downstream from the head of the swale. In this situation, the swale width and length must be recalculated from the point of confluence to the discharge point in order to provide adequate treatment for the increased flows.

7.4.3.3 Design Criteria

Same as specified for basic biofiltration swale except for the following:

- The design flow for continuous inflow swales must include runoff from the pervious side slopes draining to the swale along the entire swale length. Therefore, they must be on-line facilities.
- If only a single design flow is used, the flow rate at the outlet should be used. The goal is to achieve an average residence time through the swale of 9 minutes as calculated using the on-line water quality design flow rate multiplied by the ratio, K (see footnotes in Table V-7-9). Assuming an even distribution of inflow into the side of the swale double the hydraulic residence time to a minimum of 18 minutes.
- Interior side slopes above the water quality design treatment elevation shall be planted in grass. A typical lawn seed mix or the biofiltration seed mixes are acceptable. Landscape plants or groundcovers other than grass may not be used anywhere between the runoff inflow elevation and the bottom of the swale.

7.4.4 BMP T940 Basic Filter Strip

7.4.4.1 Description

A basic filter strip is flat with no side slopes (Figure V-7-23). Untreated stormwater is distributed as sheet flow across the inlet width of a biofilter strip.

7.4.4.2 Applications/Limitations

The basic filter strip is typically used on-line and adjacent and parallel to a paved area such as parking lots, driveways, and roadways. Where a filter strip area is compost-amended to a minimum of 10% organic content in accordance with BMP L613; with hydroseeded grass maintained at 95% density and a 4-inch length by mowing and periodic re-seeding (possible landscaping with herbaceous shrubs), the filter strip serves as an Enhanced Treatment option.

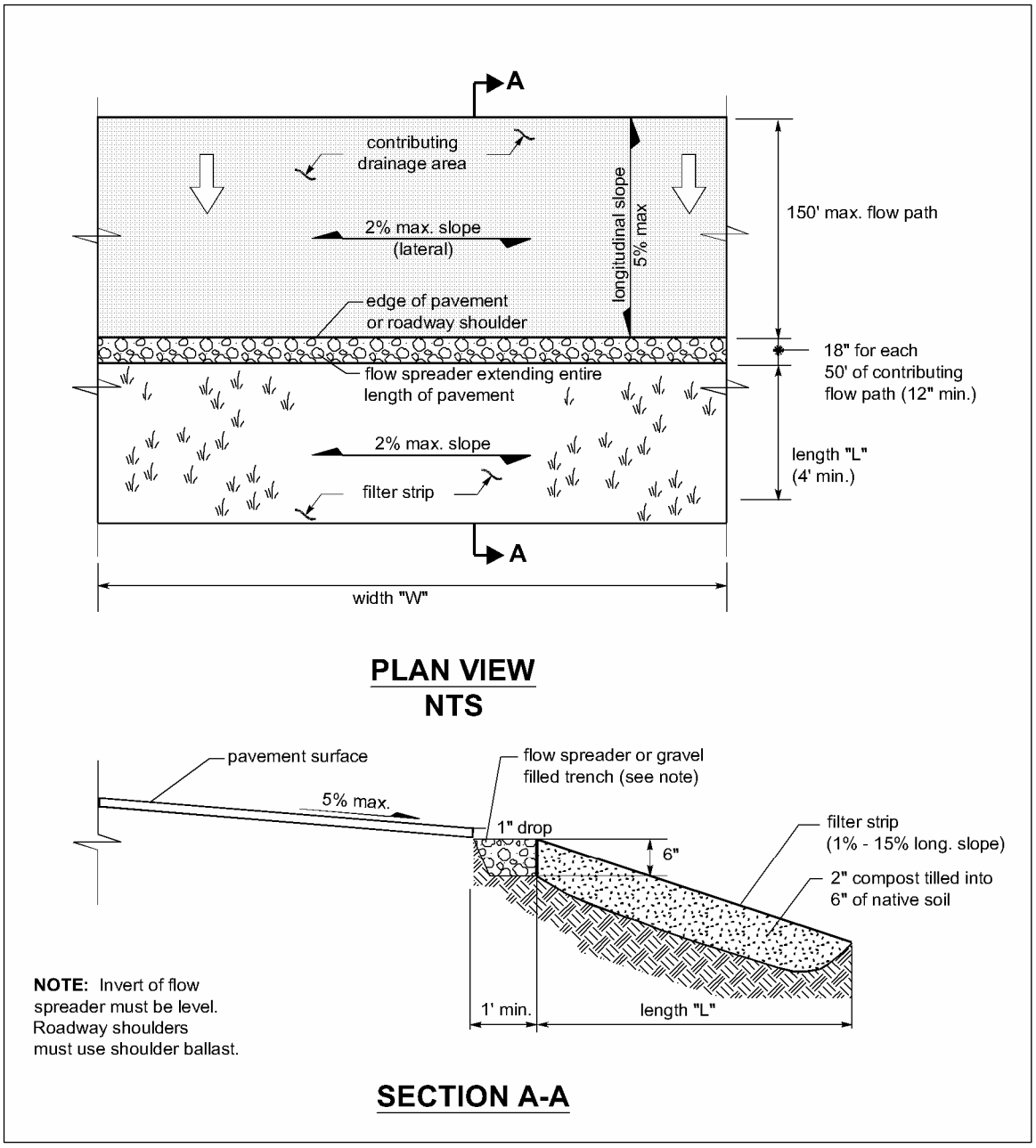

Figure V-7-23. Typical Filter Strip

7.4.4.3 Design Criteria for Filter strips:

- Use the Design Criteria specified in Table V-7-9.
- Filter strips shall only receive sheet flow.
- Use curb cuts ≥ 12-inch wide and 1-inch above the filter strip inlet.

7.4.4.4 Sizing Procedure

1. Calculate the design flow depth using Manning's equation as follows:

   $KQ = (1.49A\ R^{0.67}\ s^{0.5})/n$

   Substituting for AR:

   $KQ = (1.49Ty^{1.67}\ s^{0.5})/n$

   Where:

   $Ty = A_{rectangle,\ ft}^{2}$
   y = $R_{rectangle}$, design depth of flow, ft. (1 inch maximum)
   Q = peak Water Quality design flow rate based on WWHM or an approved continuous simulation model, ft^3/sec
   K = A ratio of the peak 10-minute flow predicted by SBUH to the water quality design flow rate estimated using the WWHM. The value of K for off-line systems is 3.5 and for on-line systems is 2.0.[1]
   n = Manning's roughness coefficient
   s = Longitudinal slope of filter strip parallel to direction of flow
   T = Width of filter strip perpendicular to the direction of flow, ft.
   A = Filter strip inlet cross-sectional flow area (rectangular), ft^2
   R = hydraulic radius, ft.

   Rearranging for y:

   $y = [KQn/1.49Ts^{0.5}]^{0.6}$
   y must not exceed 1 inch

2. Calculate the design flow velocity V, ft./sec., through the filter strip:

   V = KQ/Ty
   V must not exceed 0.5 ft./sec

3. Calculate required length, ft., of the filter strip at the minimum hydraulic residence time, t, of 9 minutes:

   L = tV = 540 V

[1] As in swale design, an adjustment factor of K accounts for the differential between the Water Quality design flow rate calculated using WWHM and the SBUH design flow.

7.4.5 BMP T950 Narrow Area Filter Strip

7.4.5.1 Description:

This section describes a filter strip design[2] for impervious areas with flowpaths of 30 feet or less that can drain along their widest dimension to grassy areas.

7.4.5.2 Applications/Limitations:

A narrow area filter strip could be used at roadways with limited right-of-way, or for narrow parking strips. If space is available to use the basic filter strip design, that design should be used in preference to the narrow filter strip.

7.4.5.3 Design Criteria:

Design criteria for narrow area filter strips are the same as specified for basic filter strips. The sizing of a narrow area filter strip is based on the length of flowpath draining to the filter strip and the longitudinal slope of the filter strip itself (parallel to the flowpath).

1. Determine the length of the flowpath from the upstream to the downstream edge of the impervious area draining sheet flow to the strip. Normally this is the same as the width of the paved area, but if the site is sloped, the flow path may be longer than the width of the impervious area.

2. Calculate the longitudinal slope of the filter strip (along the direction of unconcentrated flow), averaged over the total width of the filter strip.

    - The minimum slope size is 2 percent. If the slope is less than 2 percent, use 2 percent for sizing purposes.

    - The maximum allowable filter strip slope is 20 percent. If the slope exceeds 20 percent, the filter strip must be stepped so that the treatment areas between drop sections do not have a longitudinal slope greater than 20 percent. Provide erosion protection at the base and flow spreaders for the drop sections. Vertical drops along the slope must not exceed 12 inches in height. If this is not possible, a different treatment facility must be selected.

3. Select the appropriate filter strip length for the flowpath length and filter strip longitudinal slope (Steps 1 and 2 above) from the graph in Figure V-7-24. Design the filter strip to provide this minimum length *L* along the entire stretch of pavement draining into it.

[2] This narrow area filter strip design method is included here because technical limitations exist in the basic design method which results in filter strips that are proportionately longer as the contributing drainage becomes narrower (a result that is counter-intuitive). Research by several parties is underway to evaluate filter strip design parameters. This research may lead to more stringent design requirements that would supersede the design criteria presented here.

To use the graph, find the length of the flowpath on one of the curves (interpolate between curves as necessary). Move along the curve to the point where the design longitudinal slope of the filter strip (x-axis) is directly below. Read the filter strip length on the y-axis which corresponds to the intersection point.

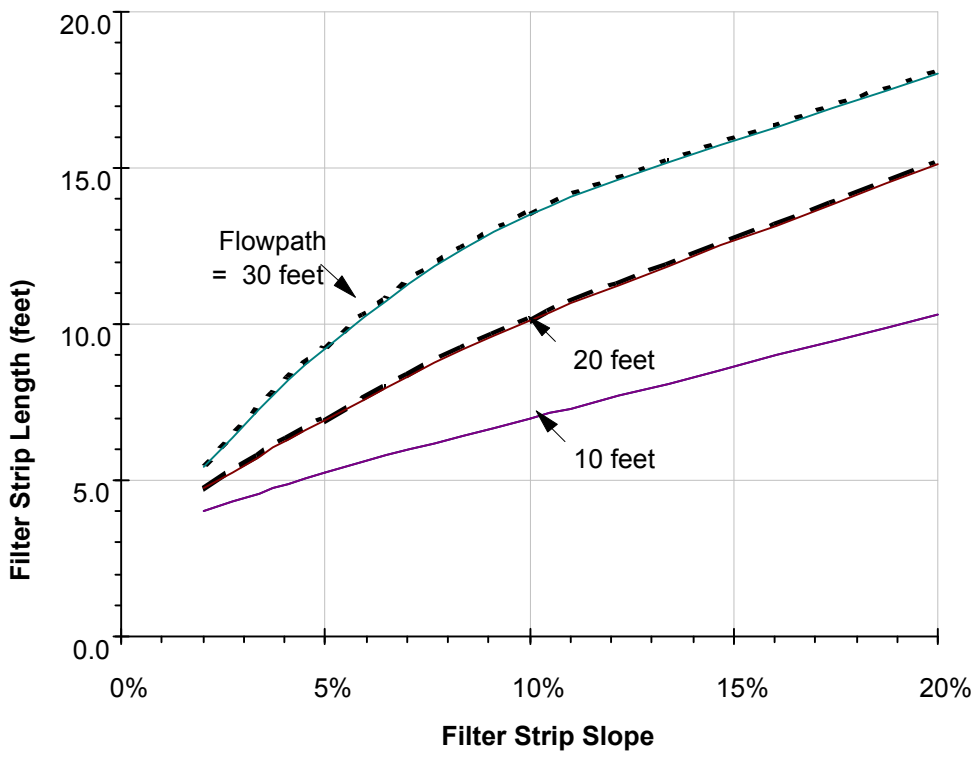

Note: minimum allowable filter strip length is 4 feet

Figure V-7-24. Filter Strip Lengths for Narrow Right-of-Way

Chapter 8 Wetpool Facilities

8.1 Purpose

This Chapter presents the methods, criteria, and details for analysis and design of wetponds, wetvaults, and stormwater wetlands. These facilities have as a common element, a permanent pool of water - the wetpool. Each of the wetpool facilities can be combined with detention storage in a combined facility.

8.2 Best Management Practices

The following wetpool facility BMPs are discussed in this chapter:

BMP T1010 – Wetponds - Basic and Large
BMP T1020 – Wetvaults
BMP T1030 – Stormwater Wetlands
BMP T1040 – Combined Detention and Wetpool Facilities

The specific BMPs that are selected should be based on the Treatment Facility Menus discussed in Chapter 2.

8.2.1 BMP T1010 Wetponds - Basic and Large

8.2.1.1 Description:

A wetpond is a constructed stormwater pond that retains a permanent pool of water ("wetpool") at least during the wet season. The volume of the wetpool is related to the effectiveness of the pond in settling particulate pollutants. As an option, a shallow marsh area can be created within the permanent pool volume to provide additional treatment for nutrient removal. Flow control can be provided in the "live storage" area above the permanent pool. Figure V-8-25 and Figure V-8-26 illustrate a typical wetpond.

8.2.1.2 Design Criteria:

For a basic wetpond, the wetpool volume provided shall be equal to or greater than the total volume of runoff from the water quality design storm, which is the 6-month, 24-hour storm event. Alternatively, the 91st percentile, 24-hour runoff volume predicted by WWHM can be used.

A large wetpond requires a wetpool volume at least 1.5 times larger than the total volume of runoff from the 6-month, 24-hour storm event.

For private wetponds, a minimum three-inch (3”) diameter power conduit shall be grounded to the edge of the pond for possible future installation of aerators.

Aerators are required to be installed on public ponds. Power provided to public ponds shall be independently metered. Specific power and aeration requirements will be determined case by case during plan review and will be based upon the size and configuration of the wetpond.

Design features that encourage plug flow and avoid dead zones are:

- Dissipating energy at the inlet.
- Providing a large length-to-width ratio.
- Providing a broad surface for water exchange using a berm designed as a broad-crested weir to divide the wetpond into two cells rather than a constricted area such as a pipe.
- Maximizing the flowpath between inlet and outlet, including the vertical path, also enhances treatment by increasing residence time.

General wetpond design criteria and concepts are shown in Figure V-8-25 and Figure V-8-26.

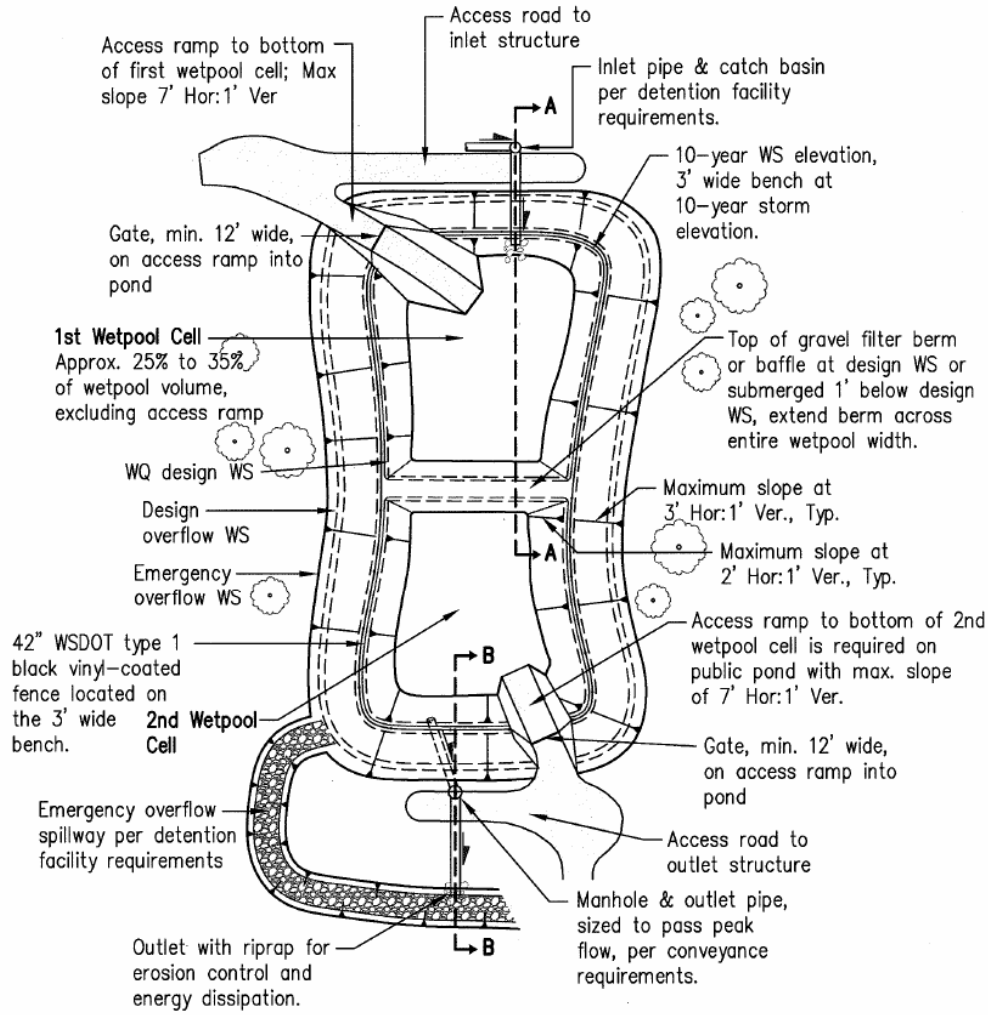

NOTE: Berm not required for ponds with length to width ration of 4:1 or if volume is less than 4000 c.f.

TYPICAL WET POND
Plan View
NTS

Figure V-8-25. Wetpond (top view)

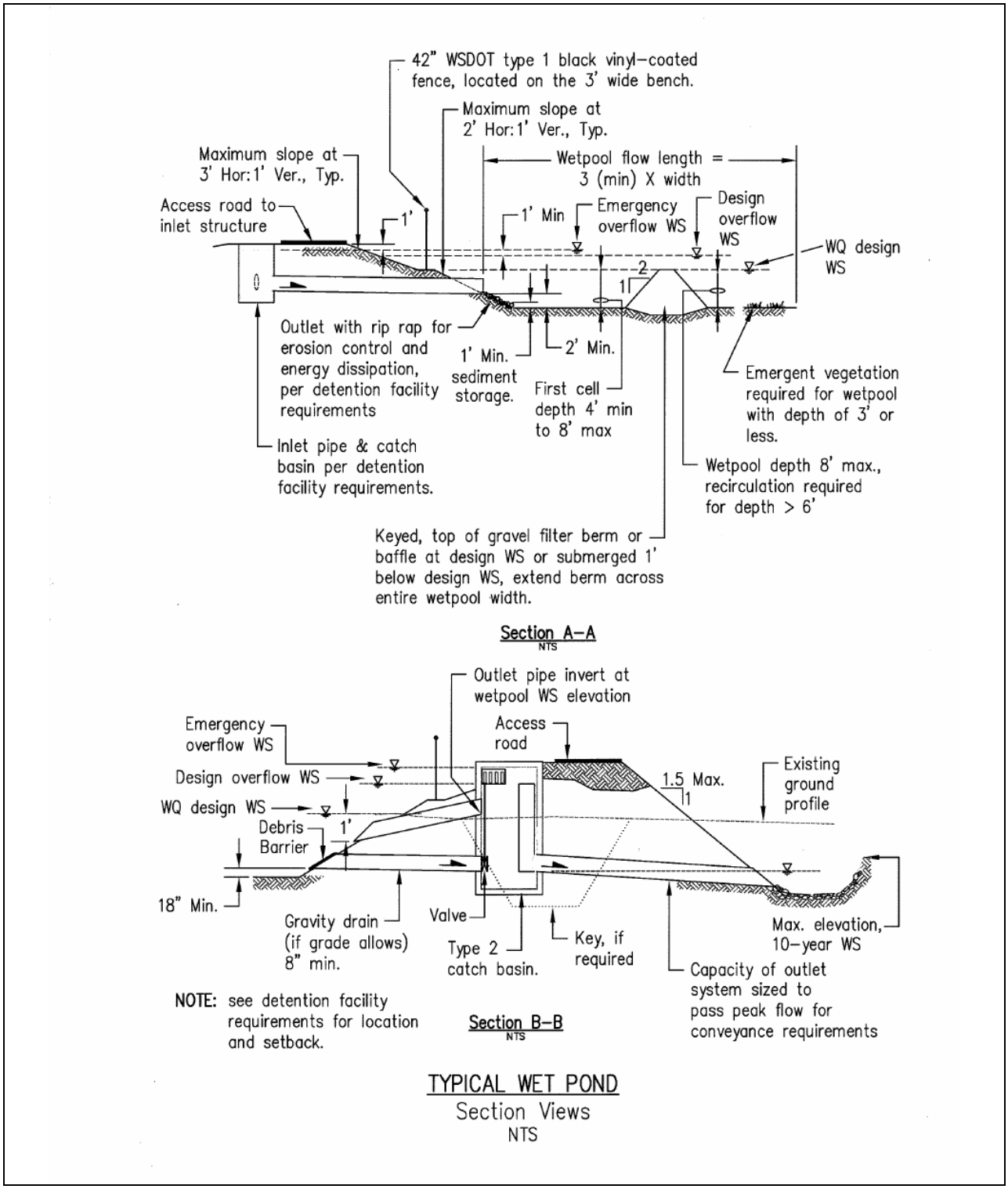

Figure V-8-26. Wetpond (side view)

8.2.1.3 Sizing Procedure

Procedures for determining a wetpond's dimensions and volume are outlined below.

1. Identify required wetpool volume using the SCS (now known as NRCS) curve number equations. A basic wetpond requires a volume equal to or greater than the total volume of runoff from the 6-month, 24-hour storm event, or, alternatively, the 91st percentile, 24-hour runoff volume using WWHM. A large wetpond requires a volume at least 1.5 times the total volume of runoff from the 6-month, 24-hour storm event or 1.5 times the 91st percentile, 24-hour runoff volume using an approved continuous runoff model.

$$Qd = \frac{[P - 0.2S]^2}{P + 0.8S} \qquad \text{for } P \geq 0.2S$$

and

$$Qd = 0 \qquad \text{for } P < 0.2S$$

Where:

Qd = runoff depth in inches over area
P = precipitation depth in inches over area
S = potential maximum detention, in inches over area, due to infiltration, storage, etc.

The area's potential maximum depth, S, is related to its curve number, CN:

$$S = (1000 / CN) - 10$$

2. Determine wetpool dimensions. Determine the wetpool dimensions satisfying the design criteria outlined below and illustrated in Figure V-8-25 and Figure V-8-26. A simple way to check the volume of each wetpool cell is to use the following equation:

$$V = \frac{h(A_1 + A_2)}{2}$$

where:
V = wetpool volume (ft^3)
h = wetpool average depth (ft)
A_1 = water quality design surface area of wetpool (sf)
A_2 = bottom area of wetpool (sf)

3. Design pond outlet pipe and determine primary overflow water surface. The pond outlet pipe shall be placed on a reverse grade from the pond's wetpool to the outlet structure. Use the following procedure to design the pond outlet pipe and determine the primary overflow water surface elevation:

   a. Use the nomographs in Figure V-8-27 and Figure V-8-28 to select a trial size for the pond outlet pipe sufficient to pass the on-line WQ design flow Q_{wq} as determined using WWHM.

   b. Use Figure V-8-29 to determine the critical depth d_c at the outflow end of the pipe for Q_{wq}.

   c. Use Figure V-8-30 to determine the flow area A_c at critical depth.

   d. Calculate the flow velocity at critical depth using continuity equation

      ($V_c = Q_{wq} / A_c$).

   e. Calculate the velocity head V_H ($V_H = V_c^2 / 2g$, where g is the gravitational constant, 32.2 feet per second).

   f. Determine the primary overflow water surface elevation by adding the velocity head and critical depth to the invert elevation at the outflow end of the pond outlet pipe (i.e., overflow water surface elevation = outflow invert + d_c + V_H).

   g. Adjust outlet pipe diameter as needed and repeat Steps (a) through (e).

4. Determine wetpond dimensions.

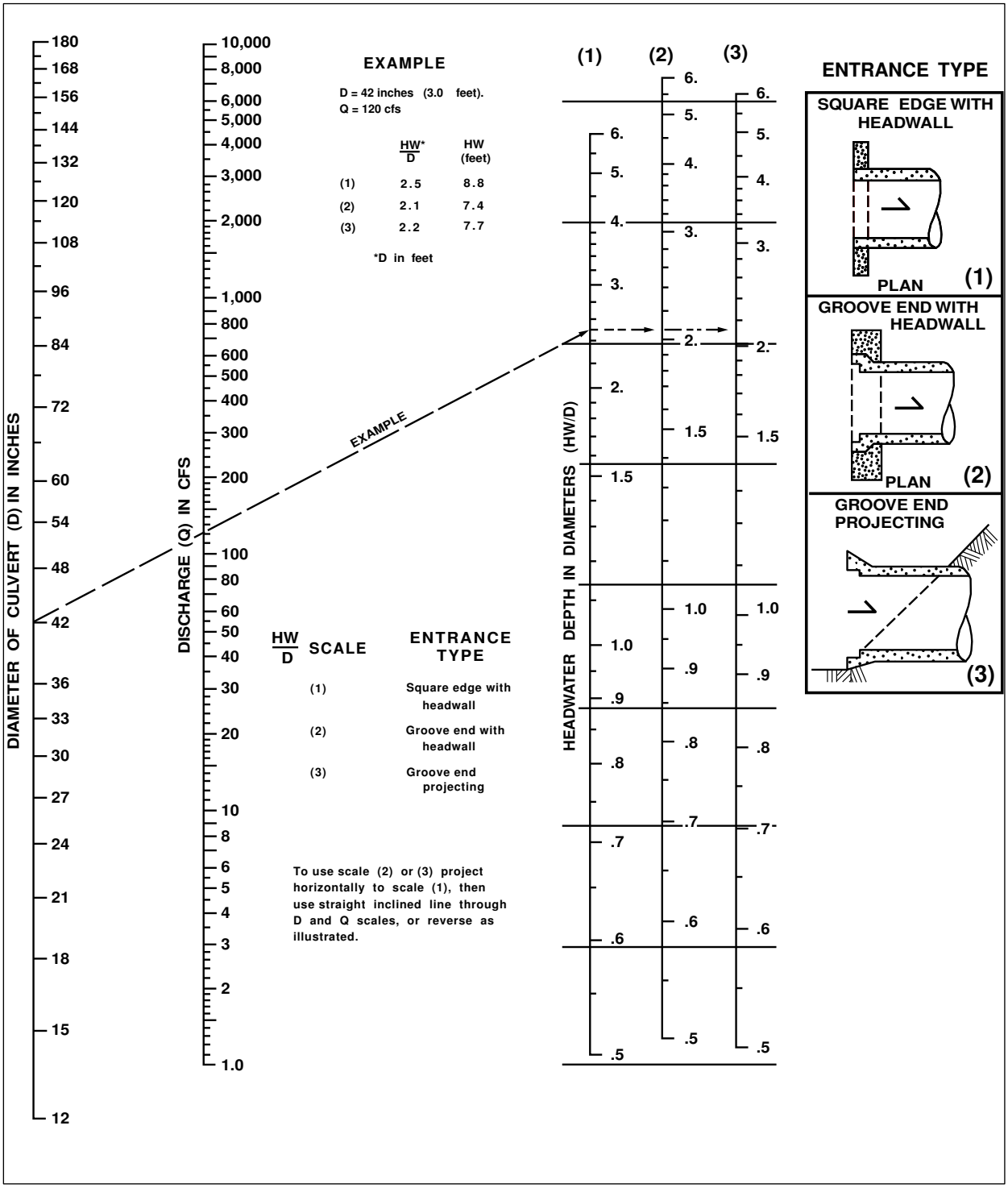

Figure V-8-27. Headwater Depth for Smooth Interior Pipe Culverts with Inlet Control

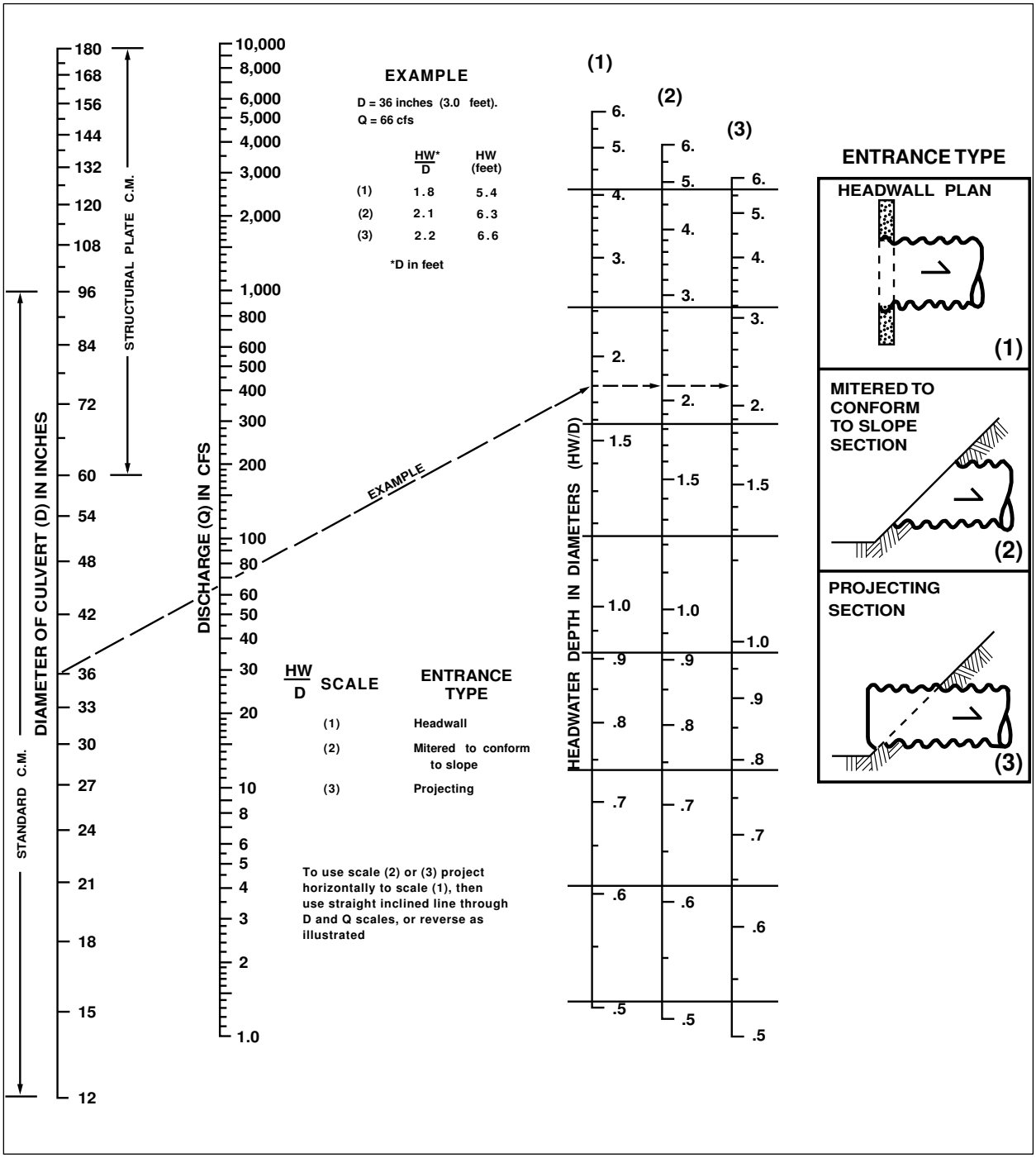

Figure V-8-28. Headwater Depth for Corrugated Pipe Culverts with Inlet Control

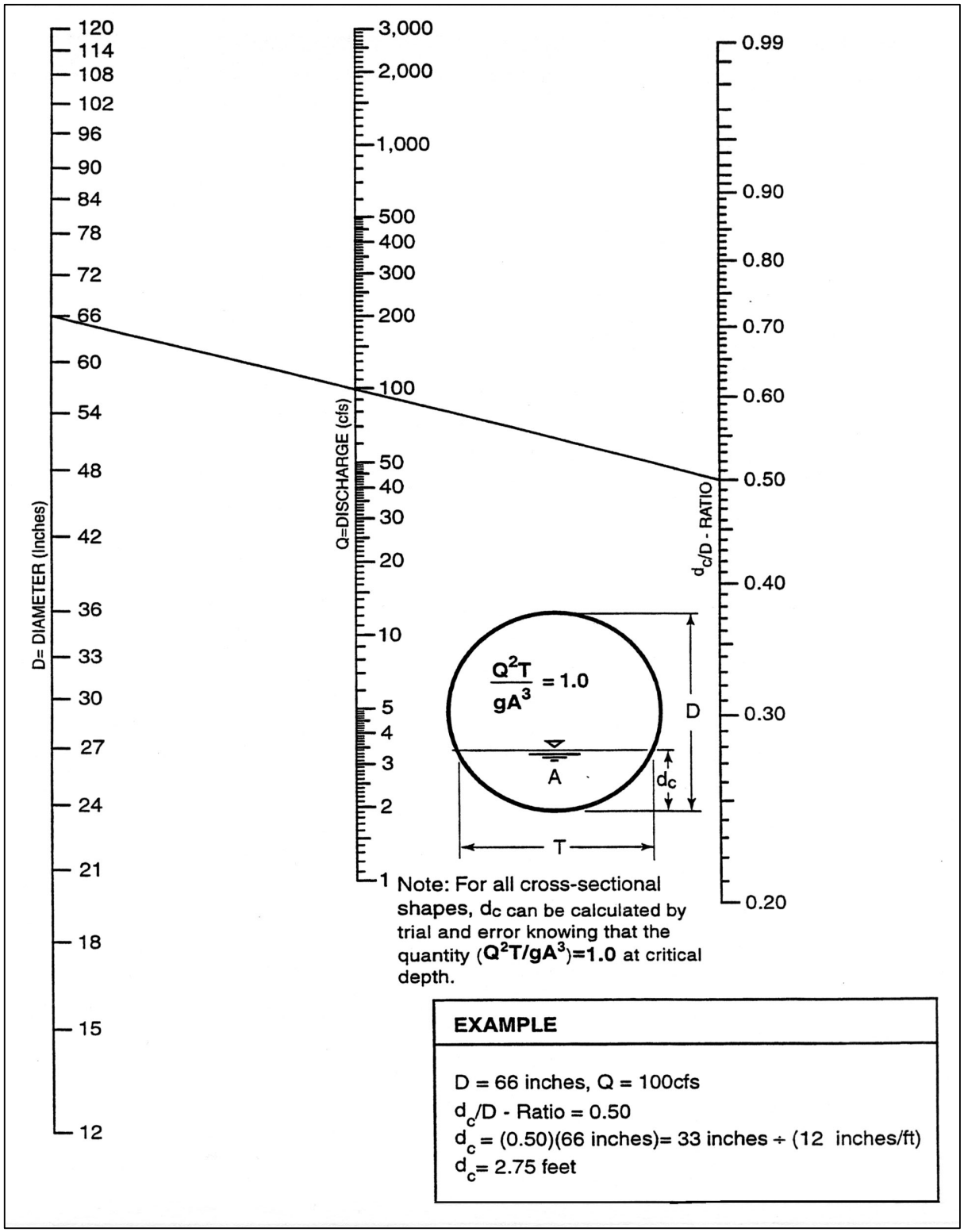

Figure V-8-29. Critical Depth of Flow for Circular Culverts

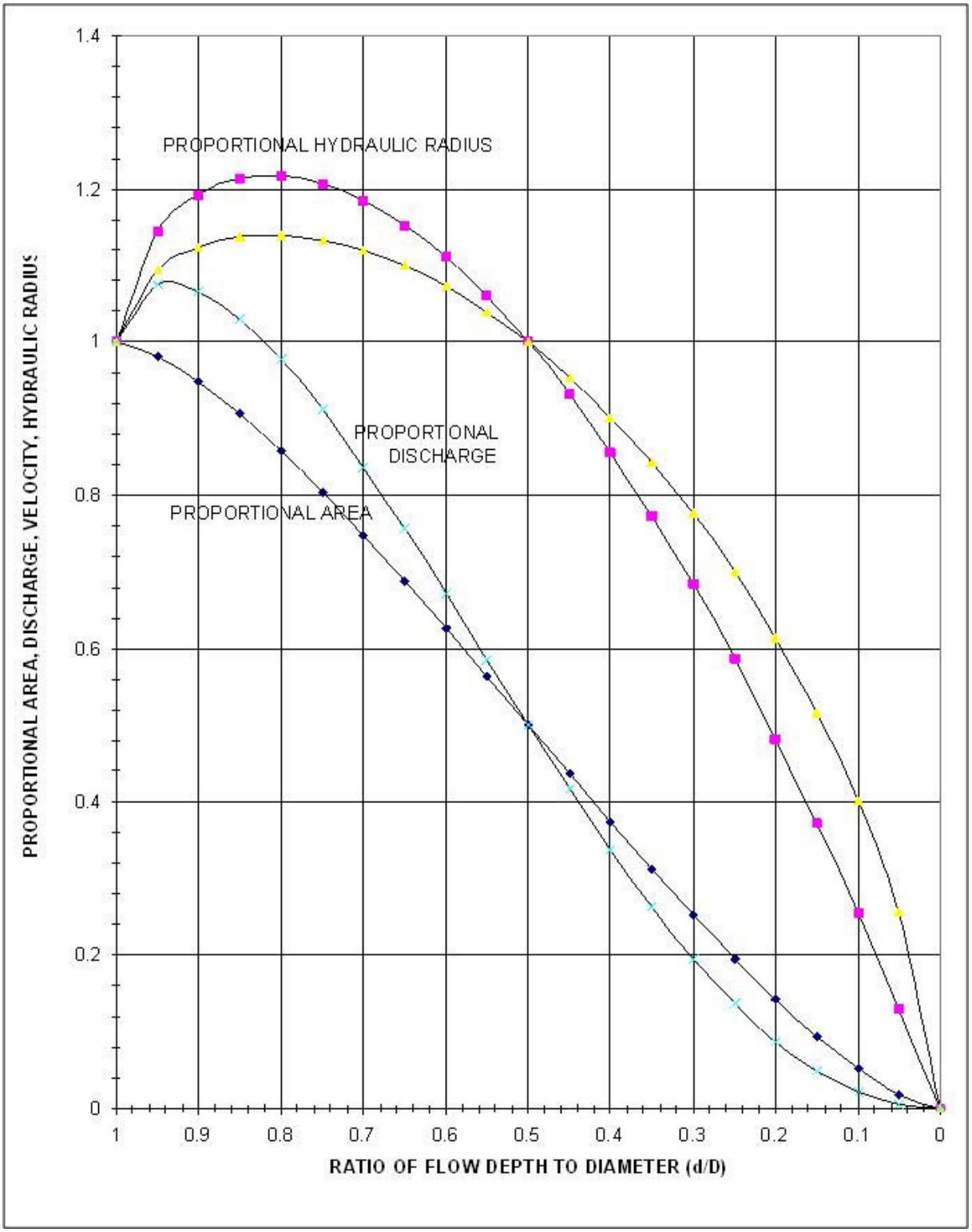

Figure V-8-30. Circular Channel Ratios

8.2.1.4 Wetpool Geometry

- Divide the wetpool into two cells separated by a baffle or berm. The first cell shall contain between 25 to 35 percent of the total wetpool volume. The baffle or berm volume shall not count as part of the total wetpool volume.
- Provide sediment storage in the first cell. The sediment storage shall have a minimum depth of 1-foot. Install a fixed sediment depth monitor in the first cell to gauge sediment accumulation unless an alternative gauging method is proposed.
- The minimum depth of the first cell shall be 4 feet, exclusive of sediment storage requirements. The depth of the first cell may be greater than the depth of the second cell.
- The maximum depth of each cell shall not exceed 8 feet (exclusive of sediment storage in the first cell). Plant pool depths of 3 feet or shallower (second cell) with emergent wetland vegetation (see planting requirements).
- Place inlets and outlets to maximize the flowpath through the facility. The ratio of flowpath length to width from the inlet to the outlet shall be at least 3:1. The ***flowpath length*** is defined as the distance from the inlet to the outlet, as measured at mid-depth. The ***width*** at mid-depth can be found as follows: width = (average top width + average bottom width)/2.
- Wetponds with wetpool volumes less than or equal to 4,000 cubic feet may be single celled (i.e., no baffle or berm is required). However, it is especially important in this case that the flow path length be maximized. The ratio of flow path length to width shall be at least 4:1 in single celled wetponds, but should preferably be 5:1.
- All inlets shall enter the first cell. For multiple inlets, the length-to-width ratio shall be based on the average flowpath length for all inlets.
- Line the first cell in accordance with the liner requirements contained in Section 3.4.

8.2.1.5 Berms, Baffles, and Slopes

- A berm or baffle shall extend across the full width of the wetpool, and tie into the wetpond side slopes. If the berm embankments are greater than 4 feet in height, the berm must be constructed by excavating a key with dimensions equal to 50 percent of the embankment cross-sectional height and width. This requirement may be waived if recommended by a geotechnical engineer for specific site conditions. The geotechnical analysis shall address situations in which one of the two cells is empty while the other remains full of water.
- The top of the berm may extend to the WQ design water surface or be 1-foot below the WQ design water surface. If at the WQ design water surface, berm side slopes shall be 3H:1V. Berm side slopes may be steeper (up to 2H:1V) if the berm is submerged 1-foot.
- If good vegetation cover is not established on the berm, erosion control measures shall be used to prevent erosion of the berm back-slope when the pond is initially filled.

- The interior berm or baffle may be a retaining wall provided that the design is prepared and stamped by a licensed civil engineer. If a baffle or retaining wall is used, it shall be submerged one foot below the design water surface to discourage access by pedestrians.
- Criteria for wetpond side slopes are included in Section 3.3.

8.2.1.6 Embankments

Embankments that impound water must comply with the Washington State Dam Safety Regulations (Chapter 173-175 WAC). If the impoundment has a storage capacity (including both water and sediment storage volumes) greater than 10 acre-feet (435,600 cubic feet or 3.26 million gallons) above natural ground level, then dam safety design and review are required by the Department of Ecology. Contact Ecology for information about this regulation.

8.2.1.7 Inlet and Outlet

See Figure V-8-25 and Figure V-8-26 for details on the following requirements:

- Submerge the inlet to the wetpond with the inlet pipe invert a minimum of two feet from the pond bottom (not including sediment storage). The top of the inlet pipe shall be submerged at least 1-foot, if possible.
- Provide an outlet structure. Either a Type 2 catch basin with a grated opening ("jail house window") or a manhole with a cone grate ("birdcage") may be used (see Volume III, Figure III-2-9 for an illustration).
- The pond outlet pipe (as opposed to the manhole or type 2 catch basin outlet pipe) shall be back-sloped or have a down-turned elbow, and extend 1 foot below the WQ design water surface.
- Size the pond outlet pipe, at a minimum, to pass the on-line WQ design flow. The highest invert of the outlet pipe sets the WQ design water surface elevation.
- The overflow criteria for single-purpose (treatment only, not combined with flow control) wetponds are as follows:
    - The requirement for primary overflow is satisfied by either the grated inlet to the outlet structure or by a birdcage above the pond outlet structure.
    - The bottom of the grate opening in the outlet structure shall be set at or above the height needed to pass the WQ design flow through the pond outlet pipe. The grate invert elevation sets the overflow water surface elevation.
    - The grated opening and downstream conveyance shall be sized to pass the 100-year design flow. The capacity of the outlet system shall be sized to pass the peak flow for the conveyance requirements.
- Provide an emergency spillway and design it according to the requirements for detention ponds (see Volume III, Section 2.3.1).
- The City may require a bypass/shutoff valve to enable the pond to be taken offline for maintenance purposes.

- A gravity drain for maintenance is recommended if grade allows.
  - The drain invert shall be at least 6 inches below the top elevation of the dividing berm or baffle. Deeper drains are encouraged where feasible, but must be no deeper than 18 inches above the pond bottom.
  - The drain shall be at least 8 inches (minimum) diameter and shall be controlled by a valve. Use of a shear gate is allowed only at the inlet end of a pipe located within an approved structure.
  - Provide operational access to the valve to the finished ground surface.
  - The valve location shall be accessible and well marked with 1-foot of paving placed around the box. It must also be protected from damage and unauthorized operation.
  - A valve box is allowed to a maximum depth of 5 feet without an access manhole. If over 5 feet deep, an access manhole or vault is required.
- All metal parts shall be corrosion-resistant. Do not use galvanized materials.

8.2.1.8 Access and Setbacks

- All facilities shall be a minimum of 20 feet from any structure, property line, and any vegetative buffer required by the local government, and 100 feet from any septic tank/drainfield.
- All facilities shall be a minimum of 50 feet from any slope greater than 20 percent. A geotechnical report must address the potential impact of a wetpond on a slope steeper than 20% or if closer than 50 feet.
- Provide access and maintenance roads and designed them according to the requirements for detention ponds. Access and maintenance roads shall extend to both the wetpond inlet and outlet structures. An access ramp (7H minimum:1V) shall be provided to the bottom of the first cell unless all portions of the cell can be reached and sediment loaded from the top of the pond.
- The internal berm of a wetpond or combined detention and wetpond may be used for access if it is designed to support a loaded 80,000 pound truck considering the berm is normally submerged and saturated.

8.2.1.9 Planting Requirements

Planting requirements for detention ponds also apply to wetponds.

- Large wetponds intended for phosphorus control shall not be planted within the cells, as the plants will release phosphorus in the winter when they die off.
- If the second cell of a basic wetpond is 3 feet deep or shallower, the bottom area shall be planted with emergent wetland vegetation. See Table V-8-15 for recommended emergent wetland plant species for wetponds. The recommendations in Table V-8-15 are for all of western Washington. Local knowledge should be used to tailor this information to Auburn as appropriate.

- Cattails (Typha latifolia) shall not be used because they tend to crowd out other species and will typically establish themselves anyway.
- If the wetpond discharges to a phosphorus-sensitive lake or wetland, shrubs that form a dense cover should be planted on slopes above the WQ design water surface on at least three sides. Native vegetation species shall be used in all cases.

8.2.1.10 Recommended Design Features

The following features should be incorporated into the wetpond design where site conditions allow:

- The method of construction of soil/landscape systems can cause natural selection of specific plant species. Consult a soil restoration or wetland soil scientist for site-specific recommendations. The soil formulation will impact the plant species that will flourish or suffer on the site, and the formulation should be such that it encourages desired species and discourages undesired species.
- For private wetpond facilities, it is recommended that some form of recirculation be provided, such as an aerator, to prevent stagnation and low dissolved oxygen conditions. Recirculation is required for all public wetpond facilities.
- A flow length-to-width ratio greater than the 3:1 minimum is desirable. If the ratio is 4:1 or greater, then the dividing berm is not required, and the pond may consist of one cell rather than two. A one-cell pond must provide at least 6-inches of sediment storage depth.
- A tear-drop shape, with the inlet at the narrow end, rather than a rectangular pond is preferred since it minimizes dead zones caused by corners.
- A small amount of base flow is desirable to maintain circulation and reduce the potential for low oxygen conditions during late summer.
- Evergreen or columnar deciduous trees along the west and south sides of ponds are recommended to reduce thermal heating, except that no trees or shrubs may be planted on berms meeting the criteria of dams regulated for safety. In addition to shade, trees and shrubs also discourage waterfowl use and the attendant phosphorus enrichment problems they cause. Trees should be set back so that the branches will not extend over the pond.
- The number of inlets to the facility should be limited; ideally there should be only one inlet. The flowpath length should be maximized from inlet to outlet for all inlets to the facility.
- The access and maintenance road could be extended along the full length of the wetpond and could double as play courts or picnic areas. Placing finely ground bark or other natural material over the road surface would render it more pedestrian friendly.

- The following design features should be incorporated to enhance aesthetics where possible:
  - Provide pedestrian access to shallow pool areas enhanced with emergent wetland vegetation. This allows the pond to be more accessible without incurring safety risks.
  - Provide side slopes that are sufficiently gentle (3H:1V or flatter).
  - Create flat areas overlooking or adjoining the pond for picnic tables or seating that can be used by residents. Walking or jogging trails around the pond are easily integrated into site design.
  - Include fountains or integrated waterfall features for privately maintained facilities.
  - Provide visual enhancement with clusters of trees and shrubs. On most pond sites, it is important to amend the soil before planting since ponds are typically placed well below the native soil horizon in very poor soils. Make sure dam safety restrictions against planting do not apply.
  - Orient the pond length along the direction of prevailing summer winds (typically west or southwest) to enhance wind mixing.

Table V-8-15. Emergent Wetland Species Recommended for Wetponds

Species	Common Name	Notes	Maximum Depth
INUNDATION TO 1-FOOT			
Agrostis exarata[1]	Spike bent grass	Prairie to coast	2 feet
Carex stipata	Sawbeak sedge	Wet ground	
Eleocharis palustris	Spike rush	Margins of ponds, wet meadows	2 feet
Glyceria occidentalis	Western mannagrass	Marshes, pond margins	2 feet
Juncus tenuis	Slender rush	Wet soils, wetland margins	
Oenanthe sarmentosa	Water parsley	Shallow water along stream and pond margins; needs saturated soils all summer	
Scirpus atrocinctus (formerly S. cyperinus)	Woolgrass	Tolerates shallow water; tall clumps	
Scirpus microcarpus	Small-fruited bulrush	Wet ground to 18 inches depth	18 inches
Sagittaria latifolia	Arrowhead		
Inundation 1 to 2 feet			
Agrostis exarata[1]	Spike bent grass	Prairie to coast	
Alisma plantago-aquatica	Water plantain		
Eleocharis palustris	Spike rush	Margins of ponds, wet meadows	
Glyceria occidentalis	Western mannagrass	Marshes, pond margins	
Juncus effuses	Soft rush	Wet meadows, pastures, wetland margins	
Scirpus microcarpus	Small-fruited bulrush	Wet ground to 18 inches depth	18 inches
Sparganium emmersum	Bur reed	Shallow standing water, saturated soils	
Inundation 1 to 3 feet			
Carex obnupta	Slough sedge	Wet ground or standing water	1.5 to 3 feet
Beckmania syzigachne[1]	Western sloughgrass	Wet prairie to pond margins	
Scirpus acutus[2]	Hardstem bulrush	Single tall stems, not clumping	3 feet
Scirpus validus[2]	Softstem bulrush		
Inundation GREATER THAN 3 feet			
Nuphar polysepalum	Spatterdock	Deep water	3 to 7.5 feet
Nymphaea odorata[1]	White waterlily	Shallow to deep ponds	6 feet

[1] Non-native species. Beckmania syzigachne is native to Oregon. Native species are preferred.

[2] Scirpus tubers must be planted shallower for establishment, and protected from foraging waterfowl until established. Emerging aerial stems should project above water surface to allow oxygen transport to the roots.

Primary sources: *Municipality of Metropolitan Seattle, Water Pollution Control Aspects of Aquatic Plants*, 1990. *Hortus Northwest, Wetland Plants for Western Oregon*, Issue 2, 1991. Hitchcock and Cronquist, *Flora of the Pacific Northwest*, 1973.

8.2.1.11 Construction Criteria:

- Remove sediment that has accumulated in the pond after construction in the drainage area of the pond is complete (unless used for a liner - see below).
- Sediment that has accumulated in the pond at the end of construction may be used as a liner in excessively drained soils if the sediment meets the criteria for low permeability or treatment liners in keeping with guidance given in Chapter 3. Sediment used for a soil liner must be graded to provide uniform coverage and must meet the thickness specifications in Chapter 3. The sediment must not reduce the design volume of the pond. The pond must be over-excavated initially to provide sufficient room for the sediments to serve as a liner.

8.2.1.12 Operation and Maintenance:

- All private drainage systems serving multiple lots shall require a signed Stormwater Easement and Maintenance agreement with the City. The agreement shall designate the systems to be maintained and the parties responsible for maintenance. Contact the City to determine the applicability of this requirement to a project. A specific maintenance plan shall be formulated outlining the schedule and scope of maintenance operations.
- The pond may be inspected by the City. The maintenance standards contained in Volume I, Appendix D are measures for determining if maintenance actions are required as identified through the annual inspection.
- Trim site vegetation as necessary to keep the pond free of leaves and to maintain the aesthetic appearance of the site. Revegetate sloped areas that have become bare and regrade eroded areas prior to revegetation.
- Remove sediment when the 1-foot sediment zone is full plus 6 inches. Dispose of sediments in accordance with current local health department requirements and the Minimum Functional Standards for Solid Waste Handling. See Volume IV, Appendix D *Recommendations for Management of Street Waste* for further guidance.
- Any standing water removed during the maintenance operation must be properly disposed of. The preferred disposal option is discharge to a sanitary sewer at an approved location. Other disposal options include discharge back into the wetpool facility or the storm sewer system if certain conditions are met. See Volume IV, Appendix D for additional guidance.

8.2.2 BMP T1020 Wetvaults

8.2.2.1 Description:

A wetvault is an underground structure similar in appearance to a detention vault, except that a wetvault has a permanent pool of water (wetpool) which dissipates energy and improves the settling of particulate pollutants (see the wetvault details in Figure V-8-31). Being underground, the wetvault lacks the biological pollutant removal mechanisms, such as algae uptake, present in surface wetponds.

8.2.2.2 Applications and Limitations:

A wetvault may be used for commercial, industrial, or roadway projects if there are space limitations precluding the use of other treatment BMPs. The use of wetvaults for residential development is highly discouraged. Combined detention and wetpools are allowed; see BMP T1040.

If oil control is required for a project, a wetvault may be combined with an API oil/water separator.

8.2.2.3 Design Criteria:

Sizing Procedure

The wetpool volume for the wetvault shall be equal to or greater than the total volume of runoff from the 6-month, 24-hour storm event. Alternatively, the 91st percentile, 24-hour runoff volume estimated by WWHM may be used.

Typical design details and concepts for the wetvault are shown in Figure V-8-31.

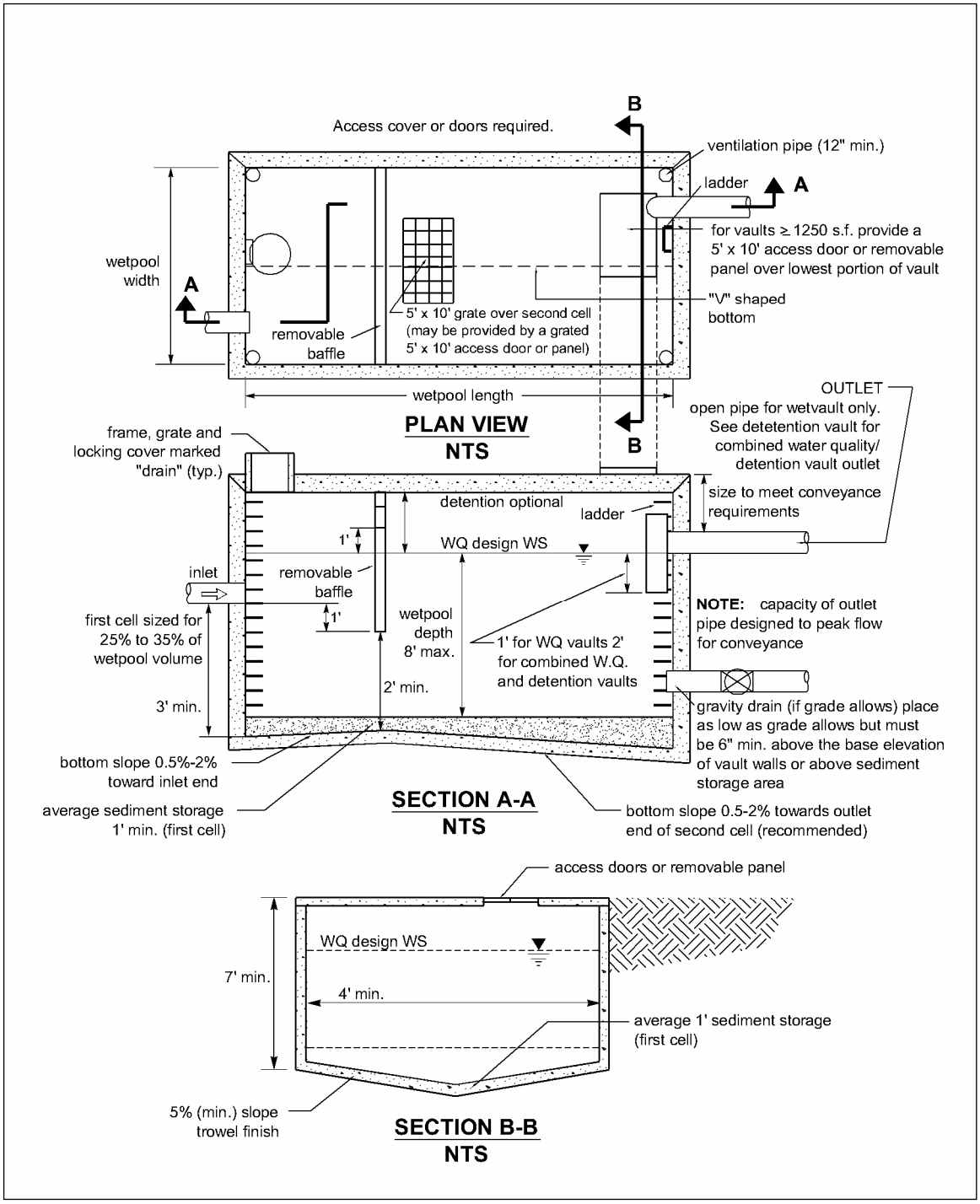

Figure V-8-31. Wetvault

8.2.2.4 Wetpool Geometry

Same as specified for wetponds (see BMP T1010) except for the following two modifications:

- The sediment storage in the first cell shall be an average of 1-foot. Because of the v-shaped bottom, the depth of sediment storage needed above the bottom of the side wall is roughly proportional to vault width according to the schedule below:

Vault Width	Sediment Depth (from bottom of side wall)
15’	10”
20’	9”
40’	6”
60’	4”

- The second cell shall be a minimum of 3 feet deep since planting cannot be used to prevent re-suspension of sediment in shallow water as it can in open ponds.

8.2.2.5 Vault Structure

- Separate the vault into two cells by a wall or a removable baffle. If a wall is used, provide a 5-foot by 10-foot removable maintenance access for both cells. If a removable baffle is used, the following criteria apply:
  - The baffle shall extend from a minimum of 1-foot above the WQ design water surface to a minimum of 1-foot below the invert elevation of the inlet pipe.
  - The lowest point of the baffle shall be a minimum of 2 feet from the bottom of the vault, and greater if feasible.
- If the vault is less than 2,000 cubic feet (inside dimensions), or if the length-to-width ratio of the vault pool is 5:1 or greater, the baffle or wall may be omitted and the vault may be one-celled.
- Do not divide the two cells of a wetvault into additional subcells by internal walls. If internal structural support is needed, it is preferred that post and pier construction be used to support the vault lid rather than walls. Any walls used within cells must be positioned so as to lengthen, rather than divide, the flowpath.
- Slope the bottom of the first cell toward the access opening. Slope shall be between 0.5 percent (minimum) and 2 percent (maximum). The second cell may be level (longitudinally) sloped toward the outlet, with a high point between the first and second cells. Sloping the second cell towards the access opening for the first cell is also acceptable. Alternatively, access openings may be positioned a maximum of 10 feet from any location within the vault.
- Slope the vault bottom laterally a minimum of 5 percent from each side towards the center, forming a broad "v" to facilitate sediment removal. Note: More than one "v" may be used to minimize vault depth.

The City may allow the vault bottom to be flat if removable panels are provided over the entire vault. Removable panels shall be at grade, have stainless steel lifting eyes, and weigh no more than 5 tons per panel.

- The highest point of a vault bottom must be at least 6 inches below the outlet elevation to provide for sediment storage over the entire bottom.
- Evaluate buoyancy of the vault with the results presented in design documentation.
- Wetvaults may be constructed using arch culvert sections provided the top area at the WQ design water surface is, at a minimum, equal to that of a vault with vertical walls designed with an average depth of 6 feet.
- Wetvaults shall conform to the "Materials" and "Structural Stability" criteria specified for detention vaults in Volume III, Section 2.3.3.
- Where pipes enter and leave the vault below the WQ design water surface, they shall be sealed using water tight seals or couplers.
- Galvanized materials shall not be used unless coated.

8.2.2.6 Inlet and Outlet

- Submerge the inlet to the wetvault. The inlet pipe invert shall be a minimum of 3 feet from the vault bottom. Submerge the top of the inlet pipe at least 1-foot, if possible.
- Unless designed as an off-line facility, the capacity of the outlet pipe and available head above the outlet pipe shall be designed to convey the 100-year design flow for developed site conditions without overtopping the vault. The available head above the outlet pipe must be a minimum of 6 inches.
- The outlet pipe shall be back-sloped or have tee section, the lower arm of which shall extend 1 foot below the WQ design water surface to provide for trapping of oils and floatables in the vault.
- Center the inlet and outlet pipes over the “V” portion of the vault.

8.2.2.7 Access Requirements

Same as for detention vaults (see Volume III, Section 2.3.3), except for the following additional requirement for wetvaults:

- Provide a minimum of 50 square feet of grate over the second cell. For vaults in which the surface area of the second cell is greater than 1,250 square feet, grate 4 percent of the top. This requirement may be met by one grate or by many smaller grates distributed over the second cell area.

  Note: A grated access door can be used to meet this requirement.

8.2.2.8 Access Roads, Right of Way, and Setbacks

Same as for detention vaults (see Volume III, Section 2.3.3).

8.2.2.9 Recommended Design Features

The following design features should be incorporated into wetvaults where feasible, but they are not specifically required:

- The floor of the second cell should slope toward the outlet for ease of cleaning.
- The inlet and outlet should be at opposing corners of the vault to increase the flowpath.
- A flow length-to-width ratio greater than 3:1 minimum is desirable.
- Lockable grates instead of solid manhole covers are recommended to increase air contact with the wetpool.
- The number of inlets to the wetvault should be limited, and the flowpath length should be maximized from inlet to outlet for all inlets to the vault.

8.2.2.10 Construction Criteria

Remove sediment that has accumulated in the vault after construction in the drainage area is complete.

8.2.2.11 Operation and Maintenance

- Vault maintenance procedures must meet OSHA confined space entry requirements, which include clearly marking entrances to confined space areas.
- Facilities may be inspected by the City. The maintenance standards contained in Volume I, Appendix D are measures for determining if maintenance actions are required as identified through the inspection.
- Remove sediment when the 1-foot sediment zone is full plus 6 inches. Test sediments for toxicants in compliance with current disposal requirements. Dispose of sediments in accordance with current local health department requirements and the Minimum Functional Standards for Solid Waste Handling. See Volume IV, Appendix D *Recommendations for Management of Street Waste* for additional guidance.
- Dispose of any standing water removed during the maintenance operation. The preferred disposal option is discharge to a sanitary sewer at an approved location. Other disposal options include discharge back into the wetpool facility or the storm sewer system if certain conditions are met. See Volume IV, Appendix D for additional guidance.

8.2.2.12 Modifications for Combining with a Baffle Oil/Water Separator

If the project site is a high-use site and a wetvault is proposed, the vault may be combined with a baffle oil/water separator to meet the runoff treatment requirements with one facility rather than two.

- The sizing procedures for the baffle oil/water separator (Chapter 9) shall be run as a check to ensure the vault is large enough. If the oil/water separator sizing procedures result in a larger vault size, increase the wetvault size to match.
- An oil retaining baffle shall be provided in the second cell near the vault outlet. The baffle shall not contain a high-flow overflow, or else the retained oil will be washed out of the vault during large storms.
- The vault shall have a minimum length-to-width ratio of 5:1.
- The vault shall have a design water depth-to-width ratio of between 1:3 and 1:2.
- The vault shall be watertight and shall be coated to protect from corrosion.
- Separator vaults shall have a shutoff mechanism on the outlet pipe to prevent oil discharges during maintenance and to provide emergency shut-off capability in case of a spill. Also, provide a valve box and riser.
- Wetvaults used as oil/water separators must be off-line and must bypass flows greater than the off-line WQ design flow multiplied by 3.5. This will minimize the entrainment and/or emulsification of previously captured oil during very high flow events.

8.2.3 BMP T1030 Stormwater Treatment Wetlands

8.2.3.1 Description

Stormwater treatment wetlands are shallow man-made ponds that are designed to treat stormwater through the biological processes associated with emergent aquatic plants (see the stormwater wetland details in Figure V-8-32 and Figure V-8-33).

Wetlands created to mitigate disturbance impacts, such as filling of wetlands, shall not be used as stormwater treatment facilities.

8.2.3.2 Applications and Limitations

The most critical factor for a successful design is the provision of an adequate supply of water for most of the year. Since water depths are shallower than in wetponds, water loss by evaporation is an important concern. Stormwater wetlands are a good WQ facility choice in areas with high winter groundwater levels.

8.2.3.3 Design Criteria

Stormwater wetlands use most of the same design criteria as wetponds (see above). However, instead of gravity settling being the dominant treatment process, pollutant removal mediated by aquatic vegetation and the microbiological community associated with that vegetation becomes the dominant treatment process. Thus when designing wetlands, water volume is not the dominant design criteria. Rather, factors which affect plant vigor and biomass are the primary concerns.

8.2.3.4 Sizing Procedure

1. The design volume is the total volume of runoff from the 6-month, 24-hour storm event or, alternatively, the 91st percentile, 24-hour runoff volume using WWHM.

2. Calculate the surface area of the stormwater wetland. The surface area of the wetland shall be the same as the top area of a wetpond sized for the same site conditions. Calculate the surface area of the stormwater wetland by using the volume from Step 1 and dividing by the average water depth (use 3 feet).

3. Determine the surface area of the first cell of the stormwater wetland. Use the volume determined from Criterion 2 under "Wetland Geometry", below, and the actual depth of the first cell.

4. Determine the surface area of the wetland cell. Subtract the surface area of the first cell (Step 3) from the total surface area (Step 2).

5. Determine water depth distribution in the second cell. Decide if the top of the dividing berm will be at the surface or submerged (designer's choice). Adjust the distribution of water depths in the second cell according to Step 8 in Section 8.2.3.5. This will result in a facility that holds less volume than that determined in Step 1 above. This is acceptable.

6. Choose plants. See Table V-8-15 for a list of plants recommended for wetpond water depth zones, or consult a wetland scientist.

8.2.3.5 Wetland Geometry

1. Stormwater wetlands shall consist of two cells, a presettling cell and a wetland cell.
2. The presettling cell shall contain approximately 33 percent of the wetpool volume calculated in Step 1 above.
3. The depth of the presettling cell shall be between 4 feet (minimum) and 8 feet (maximum), excluding sediment storage.
4. Provide one-foot of sediment storage in the presettling cell.
5. The wetland cell shall have an average water depth of about 1.5 feet (plus or minus 3 inches).
6. Shape the "berm" separating the two cells such that its downstream side gradually slopes to form the second shallow wetland cell (see the section view in Figure V-8-32). Alternatively, the second cell may be graded naturalistically from the top of the dividing berm (see Step 8 below).
7. The top of the berm shall be either at the WQ design water surface or submerged 1 foot below the WQ design water surface. Correspondingly, the side slopes of the berm must meet the following criteria:
   a. If the top of berm is at the WQ design water surface, the berm side slopes shall be no steeper than 3H:1V.
   b. If the top of berm is submerged 1-foot, the upstream side slope may be up to 2H:1V.
8. Grade the bottom of the wetland cell in one of two ways:
   a. Shallow evenly graded slope from the upstream to the downstream edge of the wetland cell (see Figure V-8-32).
   b. A "naturalistic" alternative, with the specified range of depths intermixed throughout the second cell (see Figure V-8-33). A distribution of depths shall be provided in the wetland cell depending on whether the dividing berm is at the water surface or submerged (see Table V-8-16).

   The maximum depth shall be 2.5 feet in either configuration.

8.2.3.6 Lining Requirements

In infiltrative soils, line both cells of the stormwater wetland. To determine whether a low-permeability liner or a treatment liner is required, determine whether the following conditions will be met. If soil permeability will allow sufficient water retention, lining may be waived.

1. The second cell must retain water for at least 10 months of the year.
2. The first cell must retain at least three feet of water year-round.

3. Use a complete precipitation record when establishing these conditions. Take into account evapo-transpiration losses as well as infiltration losses. Many wetland plants can adapt to periods of summer drought, so a limited drought period is allowed in the second cell. This may allow a treatment liner rather than a low permeability liner to be used for the second cell. The first cell must retain water year-round in order for the presettling function to be effective.

4. If a low permeability liner is used, place a minimum of 18 inches of native soil amended with good topsoil or compost (one part compost mixed with 3 parts native soil) over the liner. For geomembrane liners, a soil depth of 3 feet is recommended to prevent damage to the liner during planting. Hydric soils are not required.

The criteria for liners given in Chapter 3 must be observed.

8.2.3.7 Inlet and Outlet

Same as for wetponds (see BMP T1010).

8.2.3.8 Access and Setbacks

- Location of the stormwater wetland relative to site constraints (e.g., buildings, property lines, etc.) shall be the same as for detention ponds (see Volume III). See Chapter 3 for typical setback requirements for WQ facilities.
- Provide access and maintenance roads and design them according to the requirements for detention ponds (see Volume III). Extend access and maintenance roads shall to both the wetland inlet and outlet structures. Provide an access ramp (7H minimum:1V) to the bottom of the first cell unless all portions of the cell can be reached and sediment loaded from the top of the wetland side slopes.
- The internal berm of a stormwater treatment wetland may be used for access if it is designed to support a loaded 80,000 pound truck considering the berm is normally submerged and saturated.

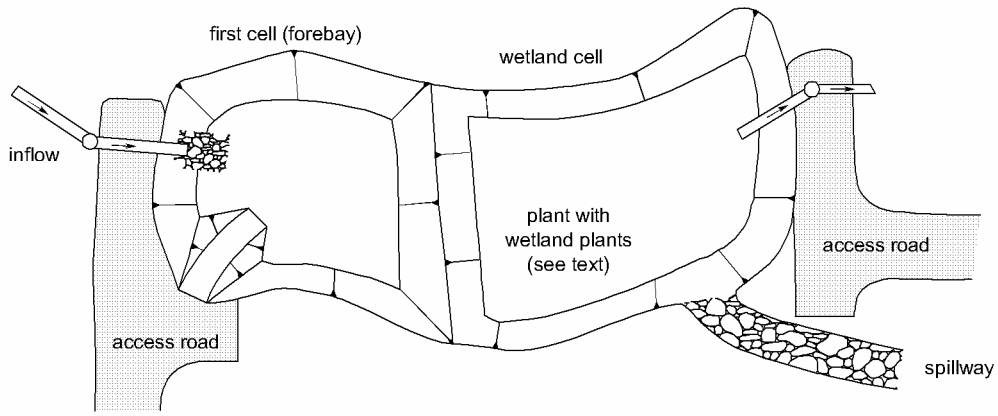

PLAN VIEW Option A
NTS

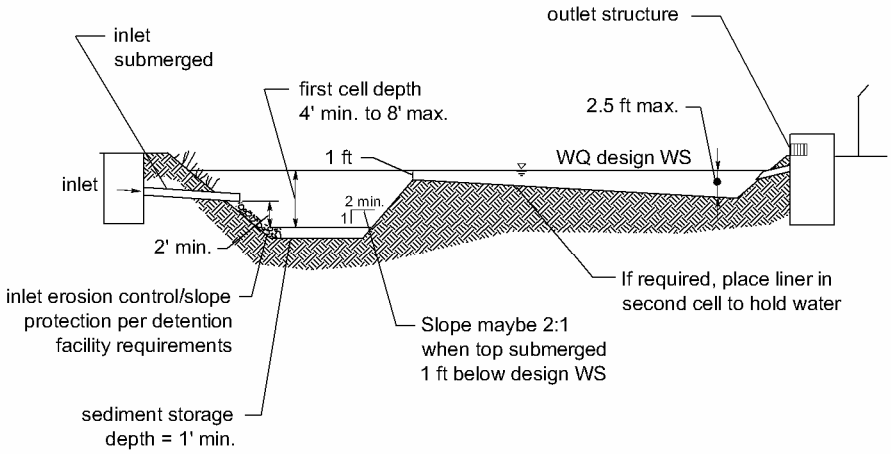

SECTION VIEW Option A
NTS

Note: See detention facility requirements for location and setback requirements.

Figure V-8-32. Stormwater Wetland – Option 1

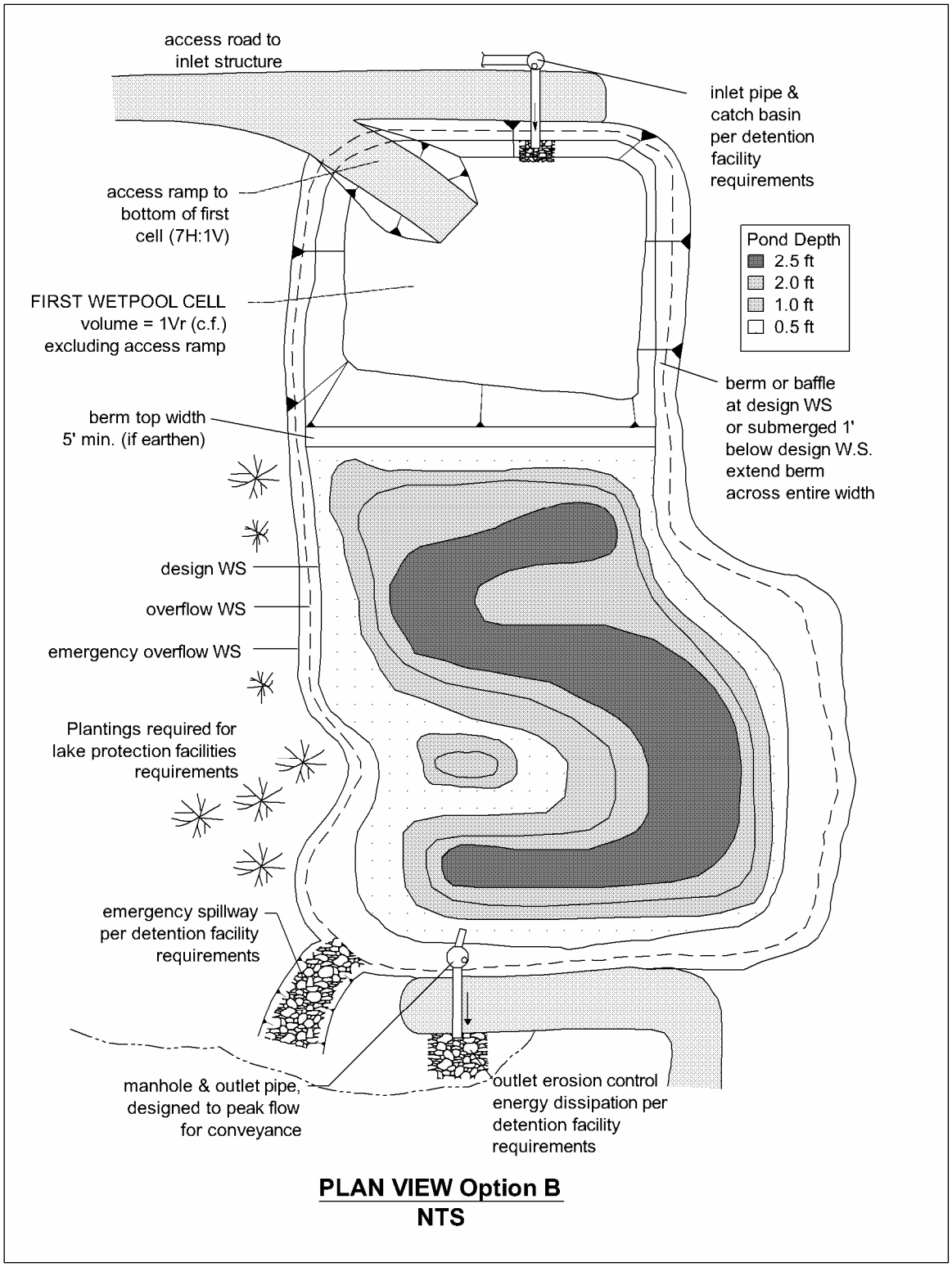

Figure V-8-33. Stormwater Wetland – Option 2

Table V-8-16. Distribution of Depths in Wetland Cell

Dividing Berm at WQ Design Water Surface		Dividing Berm Submerged 1-Foot	
Depth Range (feet)	Percent	Depth Range (feet)	Percent
0.1 to 1	25	1 to 1.5	40
1 to 2	55	1.5 to 2	40
2 to 2.5	20	2 to 2.5	20

8.2.3.9 Planting Requirements

Plant the wetland cell with emergent wetland plants following the recommendations given in Table V-8-15 or the recommendations of a wetland specialist. Cattails (Typha latifolia) are not allowed.

8.2.3.10 Construction Criteria

- Construction and maintenance considerations are the same as for wetponds.
- Construction of the naturalistic alternative (Option 2) can be accomplished by first excavating the entire area to the 1.5-foot average depth. Then soil subsequently excavated to form deeper areas can be deposited to raise other areas until the distribution of depths indicated in the design is achieved.

8.2.3.11 Operation and Maintenance

- Inspect wetlands at least twice per year during the first three years during both growing and non-growing seasons to observe plant species presence, abundance, and condition; bottom contours and water depths relative to plans; and sediment, outlet, and buffer conditions.
- Schedule maintenance around sensitive wildlife and vegetation seasons.
- Plants may require watering, physical support, mulching, weed removal, or replanting during the first three years.
- Remove nuisance plant species and replant desirable species.

8.2.4 BMP T1040 Combined Detention and Wetpool Facilities

8.2.4.1 Description:

Combined detention and WQ wetpool facilities have the appearance of a detention facility but contain a permanent pool of water as well. The following design procedures, requirements, and recommendations cover differences in the design of the stand-alone WQ facility when combined with detention storage. The following combined facilities are addressed:

- Detention/wetpond (basic and large)
- Detention/wetvault
- Detention/stormwater wetland.

There are two sizes of the combined wetpond, a basic and a large, but only a basic size for the combined wetvault and combined stormwater wetland. The facility sizes (basic and large) are related to the pollutant removal goals. See Chapter 3 for more information about treatment performance goals.

8.2.4.2 Applications and Limitations:

Combined detention and water quality facilities are efficient for sites that also have detention requirements. The water quality facility may often be placed beneath the detention facility without increasing the facility surface area. However, the fluctuating water surface of the live storage will create unique challenges for plant growth and for aesthetics alike.

The live storage component of the facility shall be provided above the seasonal high water table.

8.2.4.3 Design Criteria:

Typical design details and concepts for a combined detention and wetpond are shown in Figure V-8-34 and Figure V-8-35. The detention portion of the facility shall meet the design criteria and sizing procedures set forth in Volume III.

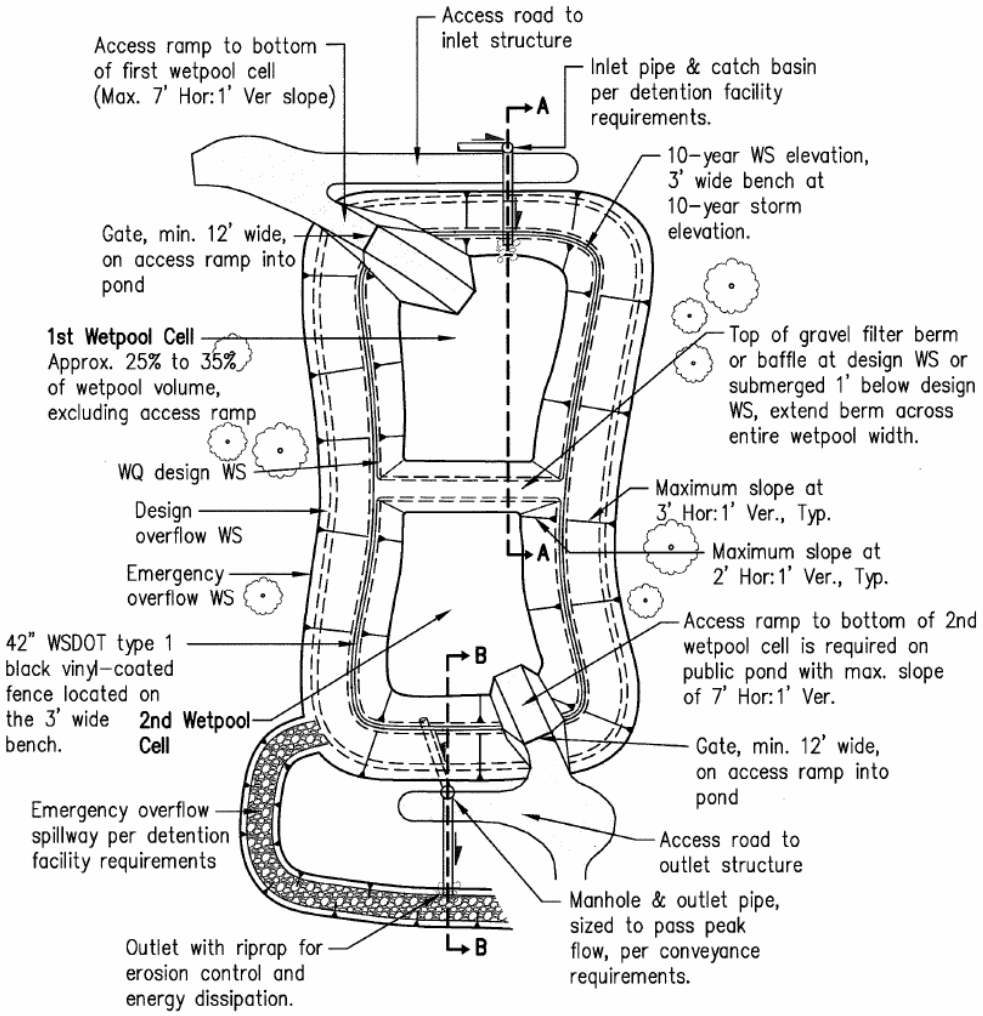

TYPICAL COMBINED DETENTION POND and WETPOND
Plan View
NTS

Figure V-8-34. Combined Detention and Wetpond (top view)

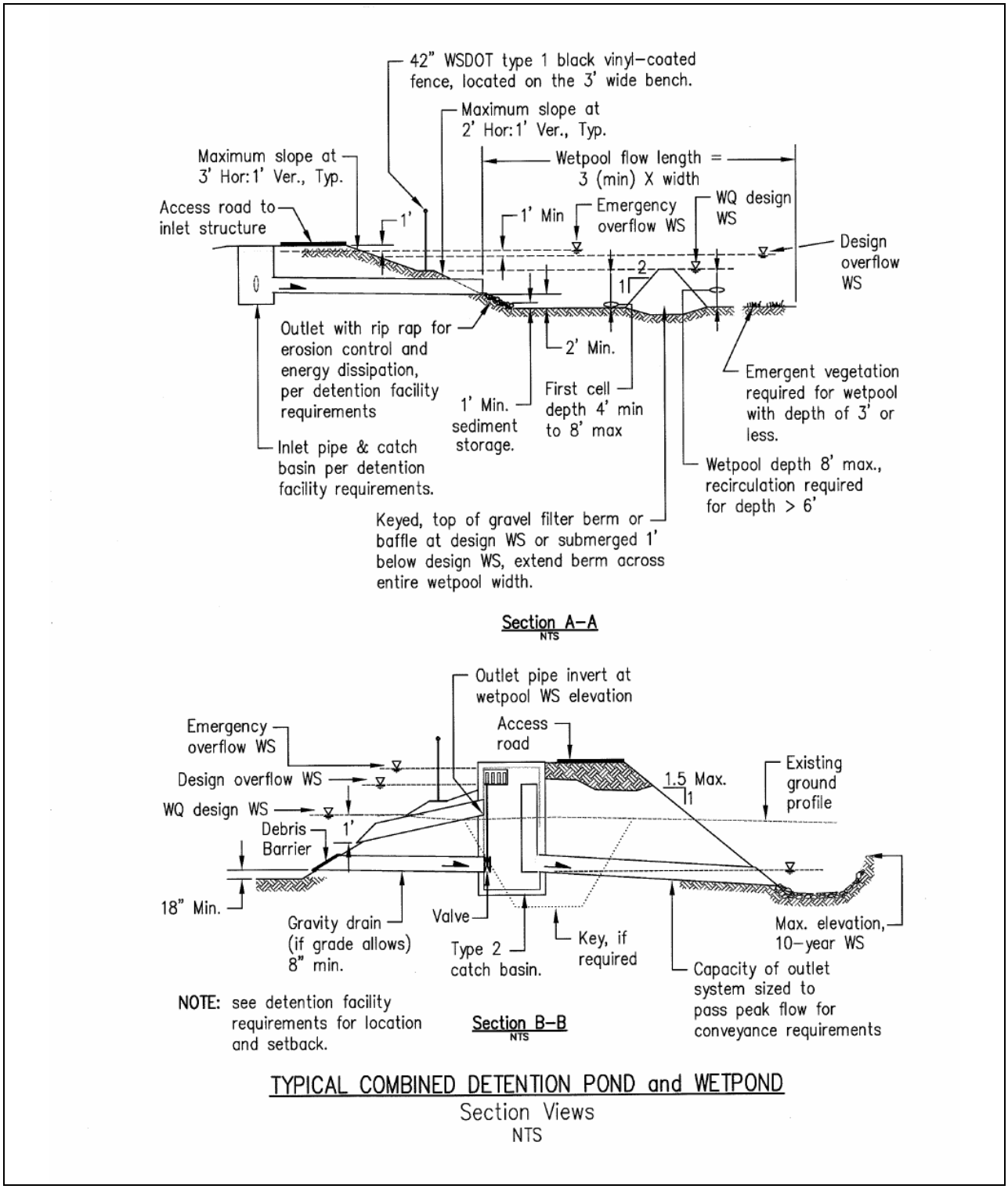

Figure V-8-35. Combined Detention and Wetpond (side view)

8.2.4.4 Sizing

The sizing for combined detention and wetponds are identical to those for wetponds and for detention facilities. The wetpool volume for a combined facility shall be equal to or greater than the total volume of runoff from the 6-month, 24-hour storm event or the 91st percentile 24-hour runoff volume estimated by WWHM. Follow the standard procedure specified in Volume III to size the detention portion of the pond.

8.2.4.5 Detention and Wetpool Geometry

- Do not include the wetpool and sediment storage volumes in the required detention volume.
- The "Wetpool Geometry" criteria for wetponds (see BMP T1010) shall apply with the following modifications/clarifications:
  - The permanent pool may be shallower to comprise most of the pond bottom, or deeper positioned to comprise a limited portion of the bottom. Note, having the first wetpool cell at the inlet allows for more efficient sediment management than if the cell is moved away from the inlet. Wetpond criteria governing water depth must still be met. See Figure V-8-36 for two possibilities for wetpool cell placement.
  - The minimum sediment storage depth in the first cell is 1-foot. The 6 inches of sediment storage required for a detention pond does not need to be added to this, but 6 inches of sediment storage must be added to the second cell to comply with the detention sediment storage requirement.

8.2.4.6 Berms, Baffles and Slopes

Same as for wetponds (see BMP T1010)

8.2.4.7 Inlet and Outlet

The Inlet and Outlet criteria for wetponds shall apply with the following modifications:

- Provide a sump in the outlet structure of combined ponds.
- Design the detention flow restrictor and its outlet pipe according to the requirements for detention ponds (see Volume III).

8.2.4.8 Access and Setbacks

The same as for wetponds.

8.2.4.9 Planting Requirements

The same as for wetponds.

8.3 Combined Detention and Wetvault

The sizing procedure for combined detention and wetvaults is identical to those outlined for wetvaults and for detention facilities. The design criteria for detention vaults and wetvaults must both be met, except for the following modifications or clarifications:

- The minimum sediment storage depth in the first cell shall average 1-foot. The 6 inches of sediment storage required for detention vaults do not need to be added to this, but 6 inches of sediment storage must be added to the second cell to comply with detention vault sediment storage requirements.
- The oil retaining baffle shall extend a minimum of 2 feet below the WQ design water surface.
- If a vault is used for detention as well as water quality control, the facility may not be modified to function as a baffle oil/water separator as allowed for wetvaults in BMP T1020.

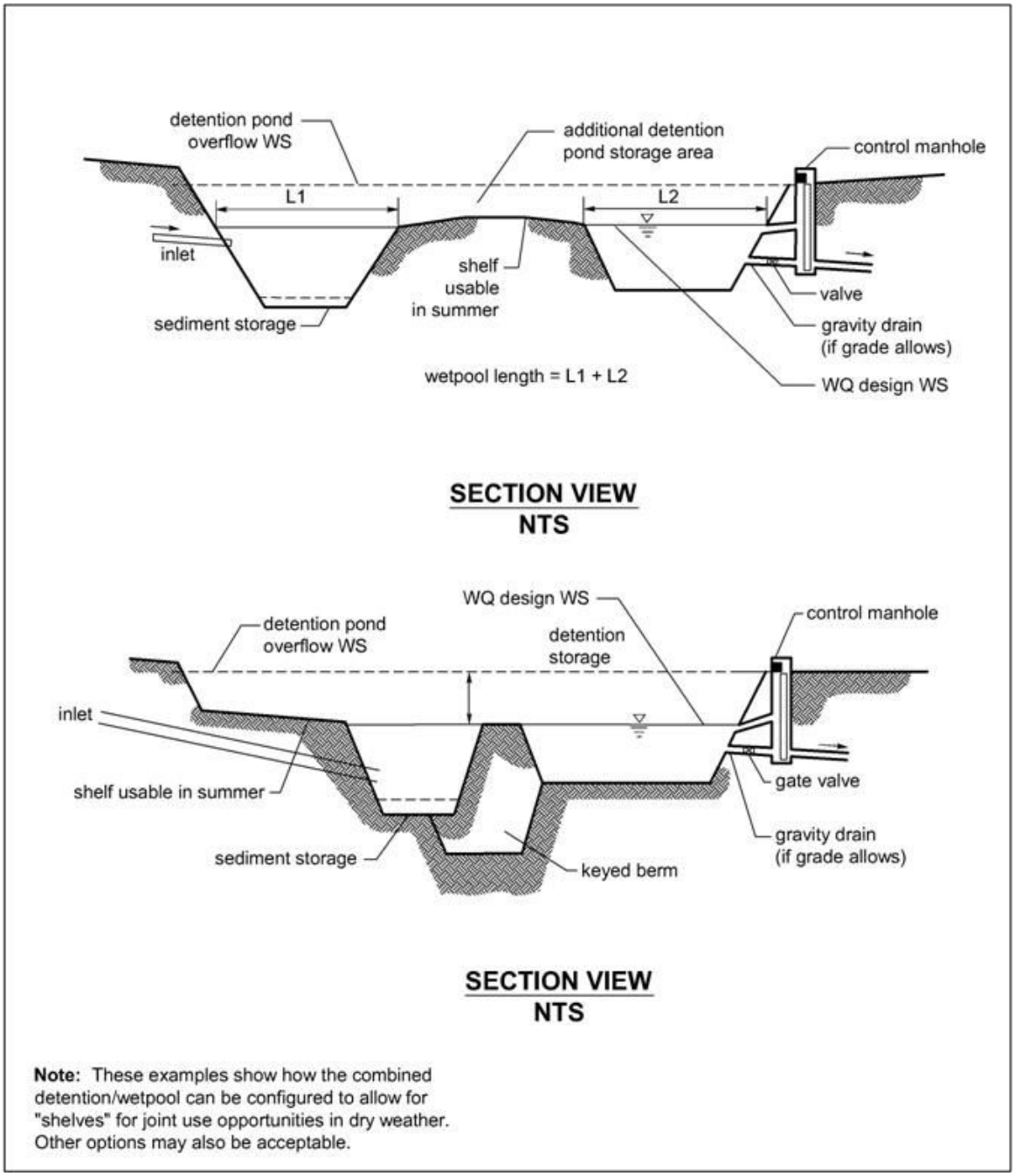

Figure V-8-36. Alternative Configurations of Detention and Wetpool Areas

8.4 Combined Detention and Stormwater Wetland

8.4.1 Sizing Criteria

The sizing procedure for combined detention and stormwater wetlands is identical to those outlined for stormwater wetlands and for detention facilities. Follow the procedure specified in BMP T1030 to determine the stormwater wetland size. Follow the standard procedure specified in Volume III to size the detention portion of the wetland.

Water Level Fluctuation Restrictions: The difference between the WQ design water surface and the maximum water surface associated with the 2-year runoff shall not be greater than 3 feet. If this restriction cannot be met, the size of the stormwater wetland must be increased. The additional area may be placed in the first cell, second cell, or both. If placed in the second cell, the additional area need not be planted with wetland vegetation or counted in calculating the average depth.

8.4.2 Design Criteria

The design criteria for detention ponds and stormwater wetlands must both be met, except for the following modifications or clarifications The Wetland Geometry criteria for stormwater wetlands (see BMP T1030) shall be modified as follows:

- The minimum sediment storage depth in the first cell is 1-foot. The 6 inches of sediment storage required for detention ponds does not need to be added to this, nor does the 6 inches of sediment storage in the second cell of detention ponds need to be added.

8.4.3 Inlet and Outlet Criteria

The Inlet and Outlet criteria for wetponds shall apply with the following modifications:

- Provide a sump in the outlet structure of combined facilities.
- Design the detention flow restrictor and its outlet pipe according to the requirements for detention ponds (see Volume III).

8.4.4 Planting Requirements

The Planting Requirements for stormwater wetlands are modified to use the following plants which are better adapted to water level fluctuations:

Scirpus acutus (hardstem bulrush)	2 - 6' depth
Scirpus microcarpus (small-fruited bulrush)	1 - 2.5' depth
Sparganium emersum (burreed)	1 - 2' depth
Sparganium eurycarpum (burreed)	1 - 2' depth
Veronica sp. (marsh speedwell)	0 - 1' depth

In addition, the shrub Spirea douglasii (Douglas spirea) may be used in combined facilities.

Chapter 9 Oil and Water Separators

9.1 Purpose

Oil and water separators remove oil and other water-insoluble hydrocarbons and settleable solids from stormwater runoff. This chapter provides a discussion of their application and design criteria. Best Management Practices (BMPs) are described for baffle type and coalescing plate separators.

9.2 Description

Oil and water separators are typically the American Petroleum Institute (API) (also called baffle type) (American Petroleum Institute, 1990) or the coalescing plate (CP) type using a gravity mechanism for separation. See Figure V-9-37 and Figure V-9-38. Oil and water separators typically consist of three bays; forebay, separator section, and the afterbay. The CP separators need considerably less space for separation of the floating oil due to the shorter travel distances between parallel plates. A spill control (SC) separator (Figure V-9-39) is a simple catch basin with a T-inlet for temporarily trapping small volumes of oil. The spill control separator is included here for comparison only and is not designed for, or to be used for, treatment purposes.

9.3 Applications/Limitations

The following are potential applications of oil and water separators where free oil is expected to be present at treatable high concentrations and sediment will not overwhelm the separator.

- Commercial and industrial areas including petroleum storage yards, vehicle maintenance facilities, manufacturing areas, airports, utility areas (water, electric, gas), and fueling stations. (*King County Surface Water Management*, 2005).
- Facilities that would require oil control BMPs under the high-use site threshold described in Chapter 2 including parking lots at convenience stores, fast food restaurants, grocery stores, shopping malls, discount warehouse stores, banks, truck fleets, auto and truck dealerships, and delivery services. (*King County Surface Water Management*, 2005).

For low concentrations of oil, other treatments may be more applicable. These include sand filters and emerging technologies.

Without intense maintenance oil/water separators may not be sufficiently effective in achieving oil and TPH removal down to required levels.

Pretreatment should be considered if the level of total suspended solids (TSS) in the inlet flow would cause clogging or otherwise impair the long-term efficiency of the separator.

For inflows from small drainage areas (fueling stations, maintenance shops, etc.) a coalescing plate (CP) type separator is typically considered, due to space limitations. However, if plugging of the plates is likely, then a new design basis for the baffle type API separator may be considered on an experimental basis (see Section 9.6).

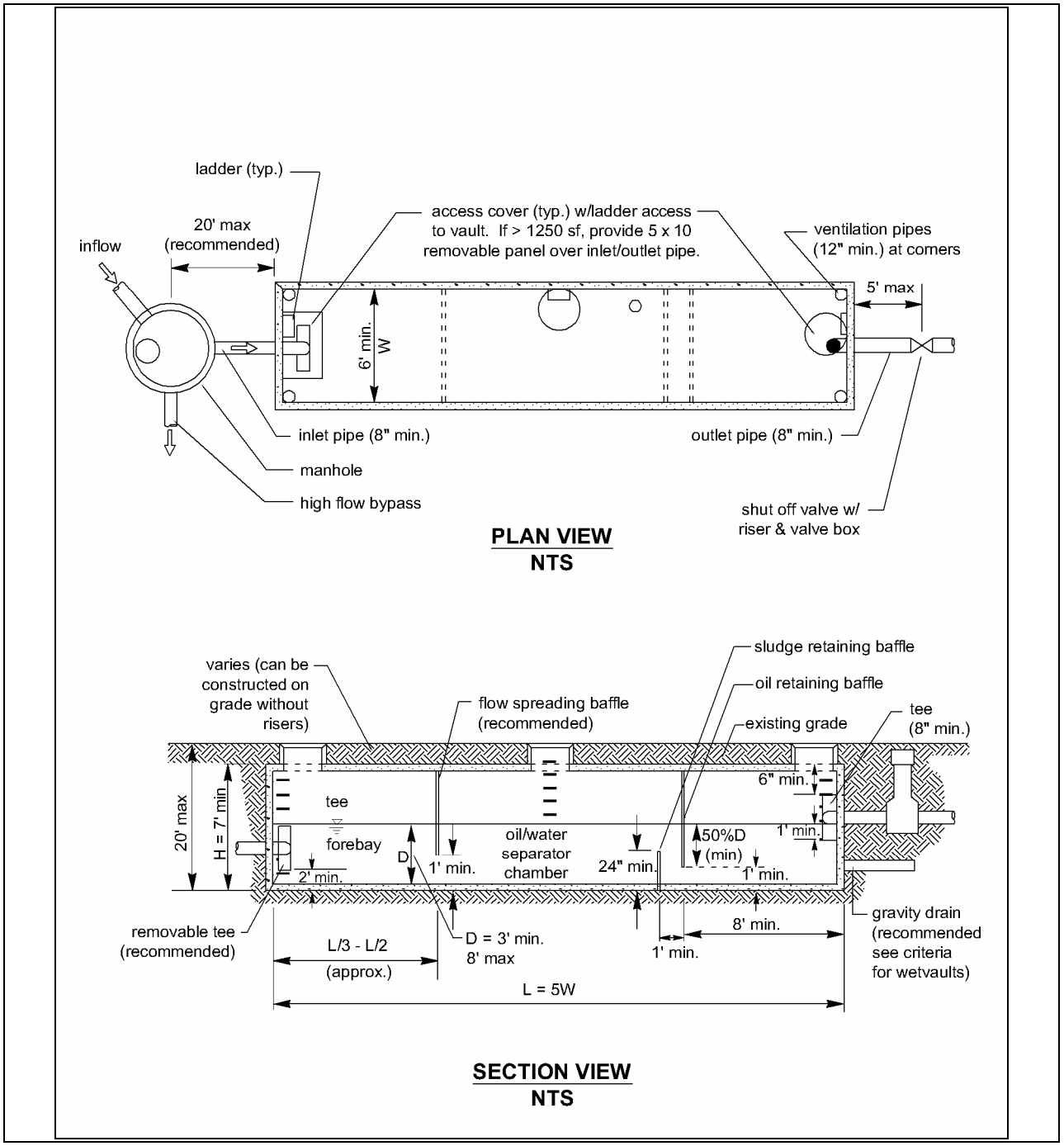

Figure V-9-37. API (Baffle Type) Separator

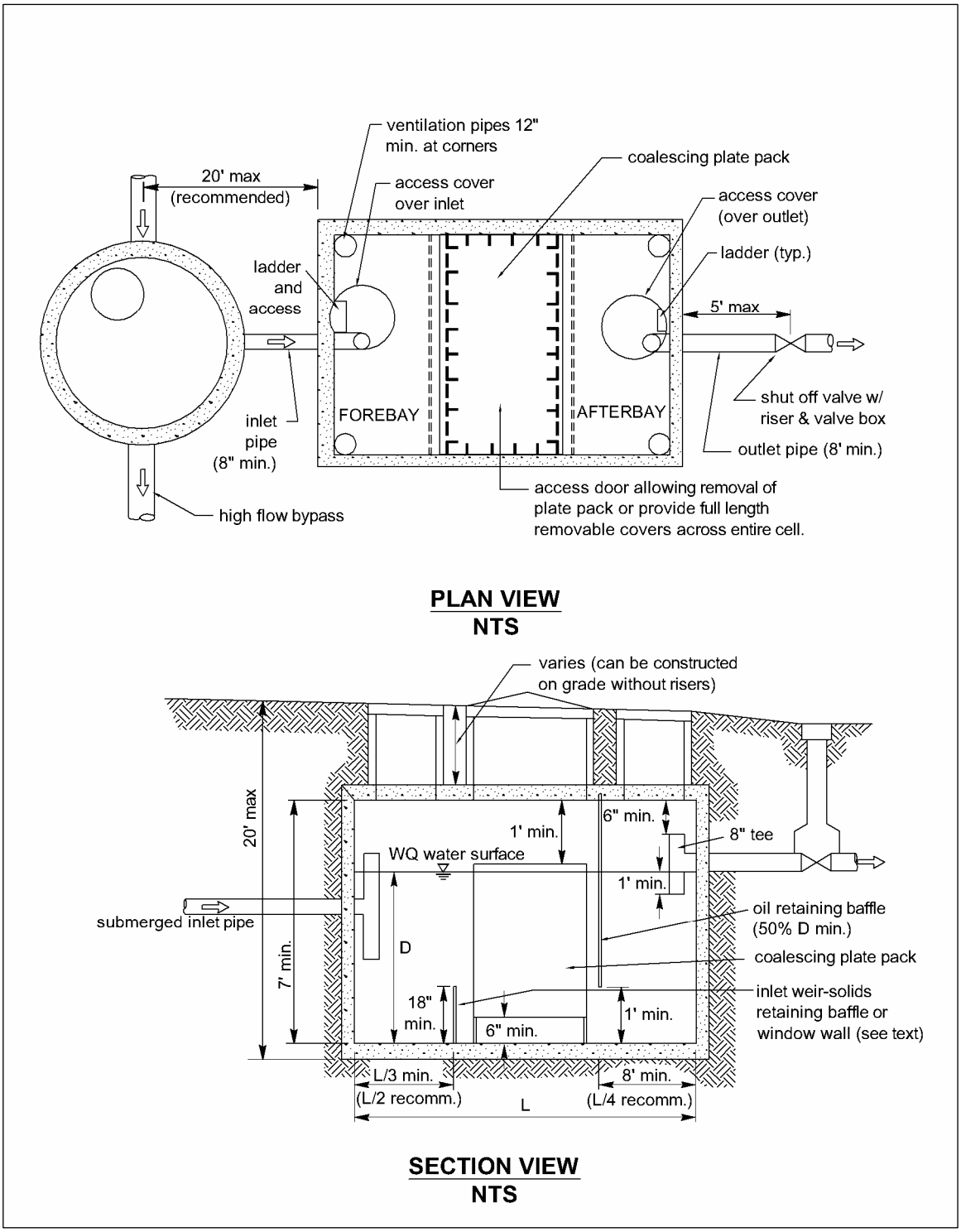

Figure V-9-38. Coalescing Plate Separator

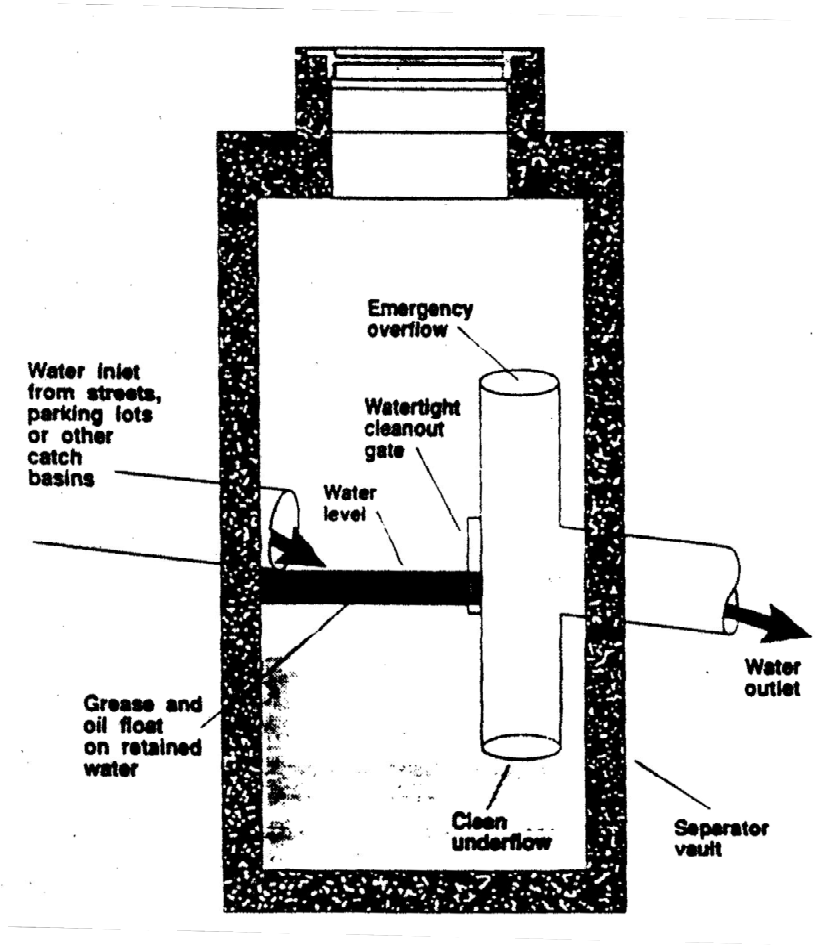

Source: 1992 Ecology Manual

Figure V-9-39. Spill Control Separator (not for oil treatment)

9.4 Site Suitability

Consider the following site characteristics:

- Sufficient land area
- Adequate TSS control or pretreatment capability
- Compliance with environmental objectives
- Adequate influent flow attenuation and/or bypass capability
- Sufficient access for operation and maintenance (O&M)

9.5 Design Criteria

9.5.1 General Considerations

The following are design criteria applicable to API and CP oil/water separators:

- If practicable, determine oil/grease (or TPH) and TSS concentrations, lowest temperature, pH, empirical oil rise rates in the runoff, and the viscosity and specific gravity of the oil. Also determine whether the oil is emulsified or dissolved. (*Washington State Department of Ecology*, 2005) Do not use oil/water separators for the removal of dissolved or emulsified oils such as coolants, soluble lubricants, glycols, and alcohols.
- Locate the separator off-line and bypass the incremental portion of flows that exceed the off-line 15-minute water quality design flow rate multiplied by 3.5. If it is necessary to locate the separator on-line, try to minimize the size of the area needing oil control, and use the on-line water quality design flow rate multiplied by 2.0.
- Use only storm drain pipes or impervious conveyances for routing oil contaminated stormwater to the oil and water separator.
- Specify appropriate performance tests after installation and shakedown, and/or certification by a professional engineer that the separator is functioning in accordance with design objectives. Expeditious corrective actions must be taken if it is determined that the separator is not achieving acceptable performance levels.
- Add pretreatment for TSS that could clog the separator, or otherwise impair the long-term effectiveness of the separator.
- All piping entering and leaving the separator must be six inches (6”) minimum diameter.
- If a pump mechanism is required to convey the discharge from the site to the sanitary sewer system, the pump must be designed to discharge to a controlled gravity outlet flow into the City system.
- Access points in the top of the vault must be provided to allow a minimum twelve-inch (12”) diameter access for observation and maintenance to all chambers of the separator.
- Access doors as applicable, should be galvanized spring-assisted diamond plate with a penta-head bolt-locking latch and recessed lift handle.
- Doors must open a full one hundred and eighty degrees (180º).
- Access to the separator shall be maintained free for inspection at all times.

9.5.2 Criteria for Separator Bays

- Size the separator bay for the off-line 15-minute water quality design flow rate predicted by WWHM multiplied by 3.5.

- To collect floatables and settleable solids, design the surface area of the forebay at ≥ 20 ft² per 10,000 ft² of area draining to the separator. The length of the forebay shall be 1/3-1/2 of the length of the entire separator. Include roughing screens for the forebay or upstream of the separator to remove debris, if needed. Screen openings shall be about 3/4 inch.
- Include a submerged inlet pipe with a down-turned elbow in the first bay at least two feet from the bottom. The outlet pipe shall be a Tee, sized to pass the design peak flow and placed at least 12 inches below the water surface.
- Include a shutoff mechanism at the separator outlet pipe.
- Use absorbents and/or skimmers in the afterbay as needed.

9.5.3 Criteria for Baffles

- Oil retaining baffles (top baffles) shall be located at least 1/4 of the total separator length from the outlet and shall extend down at least 50% of the water depth and at least 1 foot from the separator bottom.
- Baffle height to water depth ratios shall be 0.85 for top baffles and 0.15 for bottom baffles.

9.6 Oil and Water Separator BMPs

Two BMPs are described in this section:

- BMP T1110 for baffle type separators
- BMP T1111 for coalescing plate separators

9.6.1 BMP T1110 API (Baffle type) Separator Bay

9.6.1.1 Design Criteria

The criteria for small drainages is based on V_h, V_t, residence time, width, depth, and length considerations. As a correction factor API's turbulence criteria is applied to increase the length.

9.6.1.2 Sizing Criteria

- Determine the oil rise rate, V_t, in cm/sec, using Stokes' Law, or empirical determination, or 0.033 ft./min. for 60μ (micron) oil droplet size. The application of Stokes' Law to site-based oil droplet sizes and densities, or empirical rise rate determinations recognizes the need to consider actual site conditions. In those cases the design basis would not be the 60 micron droplet size and the 0.033 ft/min. rise rate.

  Stokes Law equation for rise rate, V_t (cm/sec):

  $Vt = [(g)(\rho_w - \rho_o)(d^2)] / [(18*\mu_w)]$

  Where:

  Vt = the rise rate of the oil droplet (cm/s or ft/sec)
  g = acceleration due to gravity (cm/s² or ft/s²)
  ρ_w = density of water at the design temperature (g/cm³ or lbm/ft³)
  ρ_o = density of oil at the design temperature (g/cm³ or lbm/ft³)
  d = oil droplet diameter (cm or ft)
  μ_w = absolute viscosity of the water (g/cm·s or lbm/ft·s)

  Use:

  oil droplet diameter, D=60 microns (0.006 cm)

  ρ_w =0.999 g/cm³ at 32° F

  ρ_o: Select conservatively high oil density,

  For example, if diesel oil @ ρ_o =0.85 g/cm³ and motor oil @ ρ_o = 0.90 can be present then use ρ_o =0.90 g/cm³

  η_w = 0.017921 poise, gm/cm-sec. at T_w=32 °F

  Use the following separator dimension criteria:

  - Separator water depth, 3 ≤d≤8 feet (to minimize turbulence)
  - Separator width, 6-20 feet
  - Depth/width (d/w) of 0.3-0.5

For Stormwater Inflow from Drainages under 2 Acres

Ecology modified the API criteria for treating stormwater runoff from small drainage areas (fueling stations, commercial parking lots, etc.) by using the design hydraulic horizontal velocity, V_h, for the design V_h/V_t ratio rather than the API minimum of $V_h/V_t = 15$. The API criteria appear applicable for greater than two acres of impervious drainage area.

Performance verification of this design basis must be obtained during at least one wet season using the test protocol referenced in Chapter 10 for new technologies.

The following is the sizing procedure using modified API criteria:

1. Determine V_t and select depth and width of the separator section based on above criteria.

2. Calculate the minimum residence time (t_m) of the separator at depth d:

   $t_m = d/V_t$

3. Calculate the horizontal velocity of the bulk fluid, V_h, vertical cross-sectional area, A_v, and actual design V_h/V_t.

   $V_h = Q/dw = Q/A_v$ (V_h maximum at < 2.0 ft/min.)

   Q = (k) . Use a value of 3.5 for K for the site location multiplied by the off-line 15 minute water quality design flow rate in ft^3/min determined by WWHM, at minimum residence time, t_m

   At V_h/V_t determine F, turbulence and short-circuiting factor API F factors range from 1.28-1.74 (see Appendix D).

4. Calculate the minimum length of the separator section, l(s), using:

   $l(s) = FQt_m/wd = F(V_h/V_t)d$
   $l(t) = l(f) + l(s) + l(a)$
   $l(t) = l(t)/3 + l(s) + l(t)/4$

   Where:

   l(t) = total length of 3 bays
   l(f) = length of forebay
   l(a) = length of afterbay

5. Calculate $V = l(s)wd = FQt_m$, and $A_h = wl(s)$

   V = minimum hydraulic design volume
   A_h = minimum horizontal area of the separator

For Stormwater Inflow from Drainages > 2 Acres:

Use $V_h = 15\ V_t$ and $d = (Q/2V_h)^{1/2}$ (with d/w = 0.5) and repeat above calculations 3-5.

9.6.2 BMP T1111 Coalescing Plate (CP) Separator Bay

9.6.2.1 Design Criteria

Calculate the projected (horizontal) surface area of plates needed using the following equation:

$$A_h = Q/Vt = [Q] / [(0.00386) * ((S_w - S_o)/(\mu_w))]$$

Where

A_h = horizontal surface area of the plates (ft²)
Vt = rise rate of the oil droplet (ft/min)
Q = design flowrate (ft³/min) The design flowrate is the off-line 15-minute water quality design flowrate predicted by WWHM multiplied by 3.5.
S_w = specific gravity of water at the design temperature
S_o = specific gravity of oil at the design temperature
μ_w = absolute viscosity of the water (poise)

- Plate spacing shall be a minimum of 3/4 inches (perpendicular distance between plates).
- Select a plate angle between 45° to 60° from the horizontal.
- Locate plate pack at least 6 inches from the bottom of the separator for sediment storage.
- Add 12 inches minimum head space from the top of the plate pack and the bottom of the vault cover.
- Design inlet flow distribution and baffles in the separator bay to minimize turbulence, short-circuiting, and channeling of the inflow especially through and around the plate packs of the CP separator. The Reynolds Number through the separator bay shall be <500 (laminar flow).
- Include forebay for floatables and afterbay for collection of effluent.
- The sediment-retaining baffle must be upstream of the plate pack at a minimum height of 18 in.
- Design plates for ease of removal, and cleaning with high-pressure rinse or equivalent.

9.6.2.2 Operation and Maintenance

- Prepare, regularly update, and implement an O & M Manual for the oil/water separators.
- Inspect oil/water separators monthly during the wet season of October 1-April 30 (*WEF & ASCE*, 1998) to ensure proper operation, and, during and immediately after a large storm event of ≥1 inch per 24 hours.

- Clean oil/water separators regularly to keep accumulated oil from escaping during storms. They must be cleaned by October 15 to remove material that has accumulated during the dry season, after all spills, and after a significant storm. Coalescing plates may be cleaned in-situ or after removal from the separator. An eductor truck may be used for oil, sludge, and washwater removal. Replace wash water in the separator with clean water before returning it to service.
- Remove the accumulated oil when the thickness reaches 1-inch. Also remove sludge deposits when the thickness reaches 6 inches.
- Replace oil absorbent pads before their sorbed oil content reaches capacity.
- Train designated employees on appropriate separator operation, inspection, record keeping, and maintenance procedures.

Chapter 10 Emerging Technologies

10.1 Background

Traditional best management practices (BMPs) such as wetponds and filtration swales may not be appropriate in many situations due to size and space restraints or their inability to remove target pollutants. Because of this, the stormwater treatment industry emerged and new stormwater treatment devices are currently in development.

Emerging technologies are those new stormwater treatment devices that are continually being added to the stormwater treatment marketplace. These devices include both permanent and construction site treatment technologies. Many of these devices have not undergone complete performance testing so their performance claims cannot be verified.

10.2 Emerging Technology and the City of Auburn

Typically devices with general use level designation (GULD) will be accepted for private stormwater treatment. Devices with GULD status may be accepted in the right-of-way with preapproval.

10.3 Ecology Role in Evaluating Emerging Technologies

To aid local governments in selecting new stormwater treatment technologies the Department of Ecology (Ecology) developed the Technology Assessment Protocol – Ecology (TAPE) and Chemical Technology Assessment Protocol Ecology (CTAPE) protocols. These protocols provide manufacturers with guidance on stormwater monitoring so they may verify their performance claims.

As a part of this process Ecology:

- Posts information on emerging technologies at the emerging technologies website: http://www.ecy.wa.gov/programs/wq/stormwater/newtech/index.html.
- Participates in all Technical Review Committee (TRC) and Chemical Technical Review Committee (CTRC) activities which include reviewing manufacturer performance data and providing recommendations on use level designations.
- Grants use level designations based on performance and other pertinent data submitted by the manufacturers and vendors.
- Provides oversight and analysis of all submittals to ensure consistency with this manual.

10.4 Evaluation of Emerging Technologies

Local governments should consider the following as they make decisions concerning the use of new stormwater treatment technologies in their jurisdiction:

Remember the Goal:

The goal of any stormwater management program or BMP is to treat and release stormwater in a manner that does not harm beneficial uses.

Exercise Reasonable Caution:

Before allowing a new technology for an application, the local government should review evaluation information based on the TAPE or CTAPE.

An emerging technology cannot be used for new or redevelopment unless this technology has a use level designation. Having a use level designation means that Ecology and the TRC or CTRC reviewed system performance data and believe the technology has the ability to provide the level of treatment claimed by the manufacturer.

To achieve the goals of the Clean Water Act and the Endangered Species Act, local governments may find it necessary to retrofit stormwater pollutant control systems for many existing stormwater discharges. In retrofit situations, the use of any BMP that makes substantial progress toward these goals is a step forward and Ecology encourages this. To the extent practical, the performance of BMPs used in retrofit situations should be evaluated using the TAPE or CTAPE protocols.

10.5 Assessing Levels of Development of Emerging Technologies

Ecology developed use level designations to assess levels of development for emerging technologies. The use level designations are based upon the quantity, quality, and type of performance data. There are three use level designations: pilot use level designation, conditional use level designation, and general use level designation.

Pilot Use Level Designation (PULD)

For technologies that have limited performance data, the pilot use level designation allows limited use to enable field testing to be conducted. Pilot use level designations may be given based solely on laboratory performance data. Pilot use level designations apply for a specified time period only. During this time period, the proponent must complete all field testing and submit a technology evaluation report (TER) to Ecology and the TRC. Ecology will limit the number of installations to five during the pilot use level period.

Local governments may allow PULD technologies to be installed if the manufacturer agrees to conduct additional field testing based on the TAPE at all sites to obtain a general use level designation. Local governments covered by a municipal stormwater NPDES permit must notify Ecology in writing when a PULD technology is proposed. The form can be found: http://www.ecy.wa.gov/programs/wq/stormwater/newtech/PULDNOI.pdf

Conditional Use Level Designation (CULD)

For emerging technologies that have considerable performance data that was not collected per the TAPE protocol, the CULD was established. Conditional use level designations may be given if field data has been collected by a protocol that is reasonably consistent but does not necessarily fully meet the TAPE protocol. The field data must meet the statistical goals set out in the TAPE guidelines Appendix D. Laboratory data may be used to supplement field data. Technologies that are granted a CULD will be allowed continued use for a specified time period, during which the field testing necessary to obtain a general use level designation (GULD) must be completed and a TER must be submitted to Ecology and the TRC. Ecology will limit the number of installations to ten during the CULD period.

General Use Level Designation (GULD)

The GULD confers a general acceptance for the specified applications (land uses). Technologies with a GULD may be used anywhere in Washington, subject to Ecology conditions.

10.6 Examples of Emerging Technologies for Stormwater Treatment and Control

Go to the Ecology Emerging Technologies website to obtain information on technologies that have obtained a use level designation:

http://www.ecy.wa.gov/programs/wq/stormwater/newtech/index.html

THIS PAGE INTENTIONALLY LEFT BLANK.

Appendix A Basic Treatment Receiving Waters

All Salt Waterbodies

Rivers	***Upstream Point for Exemption***
Baker	Anderson Creek
Bogachiel	Bear Creek
Cascade	Marblemount
Chehalis	Bunker Creek
Clearwater	Town of Clearwater
Columbia	Canadian Border
Cowlitz	Skate Creek
Elwha	Lake Mills
Green	Howard Hanson Dam
Hoh	South Fork Hoh River
Humptulips	West and East Fork Confluence
Kalama	Italian Creek
Lewis	Swift Reservoir
Muddy	Clear Creek
Nisqually	Alder Lake
Nooksack	Glacier Creek
South Fork Nooksack	Hutchinson Creek
North River	Raymond
Puyallup	Carbon River
Queets	Clearwater River
Quillayute	Bogachiel River
Quinault	Lake Quinault
Sauk	Clear Creek
Satsop	Middle and East Fork Confluence
Skagit	Cascade River
Skokomish	Vance Creek
Skykomish	Beckler River
Snohomish	Snoqualmie River
Snoqualmie	Middle and North Fork Confluence
Sol Duc	Beaver Creek
Stillaguamish	North and South Fork Confluence
North Fork Stillaguamish	Boulder River
South Fork Stillaguamish	Canyon Creek
Suiattle	Darrington
Tilton	Bear Canyon Creek
Toutle	North and South Fork Confluence
North Fork Toutle	Green River
Washougal	Washougal
White	Greenwater River
Wind	Carson
Wynoochee	Wishkah River Road Bridge

Lakes	***County***
Washington	King
Sammamish	King
Union	King
Whatcom	Whatcom
Silver	Cowlitz

Appendix B Procedure for Conducting a Pilot Infiltration Test

The Pilot Infiltration Test (PIT) consists of a relatively large-scale infiltration test to better approximate infiltration rates for design of stormwater infiltration facilities. The PIT reduces some of the scale errors associated with relatively small-scale double ring infiltrometer or “stove-pipe” infiltration tests. It is not a standard test but rather a practical field procedure recommended by Ecology’s Technical Advisory Committee.

Infiltration Test

1. Excavate the test pit to the depth of the bottom of the proposed infiltration facility. Lay back the slopes sufficiently to avoid caving and erosion during the test.

2. The horizontal surface area of the bottom of the test pit should be approximately 100 square feet. For small drainages and where water availability is a problem smaller areas may be considered as determined by the site professional.

3. Accurately document the size and geometry of the test pit.

4. Install a vertical measuring rod (minimum 5-ft. long) marked in half-inch increments in the center of the pit bottom.

5. Use a rigid 6-inch diameter pipe with a splash plate on the bottom to convey water to the pit and reduce side-wall erosion or excessive disturbance of the pond bottom. Excessive erosion and bottom disturbance will result in clogging of the infiltration receptor and yield lower than actual infiltration rates.

6. Add water to the pit at a rate that will maintain a water level between 3 and 4 feet above the bottom of the pit. A rotometer can be used to measure the flow rate into the pit. A water level of 3 to 4 feet provides for easier measurement and flow stabilization control. However, the depth should not exceed the proposed maximum depth of water expected in the completed facility.

7. Every 15-30 min, record the cumulative volume and instantaneous flow rate in gallons per minute necessary to maintain the water level at the same point (between 3 and 4 feet) on the measuring rod.

8. Add water to the pit until one hour after the flow rate into the pit has stabilized (constant flow rate) while maintaining the same pond water level (usually 17 hours).

9. After the flow rate has stabilized, turn off the water and record the rate of infiltration in inches per hour from the measuring rod data, until the pit is empty.

Data Analysis

1. Calculate and record the infiltration rate in inches per hour in 30 minutes or one-hour increments until one hour after the flow has stabilized.

   NOTE: Use statistical/trend analysis to obtain the hourly flow rate when the flow stabilizes. This would be the lowest hourly flow rate.

2. Apply appropriate correction factors for site heterogeneity, anticipated level of maintenance and treatment to determine the site-specific design infiltration rate (see Table V-B-17).

Table V-B-17. Correction Factors to be Used with In-Situ Infiltration Measurements to Estimate Long-Term Design Infiltration Rates

Issue	Partial Correction Factor
Site variability and number of locations tested	CF_v = 1.5 to 6
Degree of long-term maintenance to prevent siltation and bio-buildup	CF_m = 2 to 6
Degree of influent control to prevent siltation and bio-buildup	CF_i = 2 to 6

Example

The area of the bottom of the test pit is 8.5-ft. by 11.5-ft.

Water flow rate was measured and recorded at intervals ranging from 15 to 30 minutes throughout the test. Between 400 minutes and 1,000 minutes the flow rate stabilized between 10 and 12.5 gallons per minute or 600 to 750 gallons per hour, or an average of (9.8 + 12.3) / 2 = 11.1 inches per hour.

Applying a correction factor of 5.5 for gravelly sand, the design long-term infiltration rate becomes 2 inches per hour, anticipating adequate maintenance and pre-treatment.

Appendix C Geotextile Specifications

Table V-C-18. Geotextile Properties for Underground Drainage Survivability Properties (WSDOT 2008 Standard Specifications or most current version)

Geotextile Property Requirements[1]			
		Low Survivability	**Moderate Survivability**
Geotextile Property	**Test Method**	**Woven/Nonwoven**	**Woven/Nonwoven**
Grab Tensile Strength, min. in machine and x-machine direction	ASTM D4632	180 lbs/115 lbs min.	250 lbs/160 lbs min.
Grab Failure Strain, in machine and x-machine direction	ASTM D4632	<50%/>50%	<50%/>50%
Seam Breaking Strength (if seams are present)	ASTM D4632 and	160 lbs/100 lbs min.	220 lbs/140 lbs min.
Puncture Resistance	ASTM D6241	370 lbs/220lbs min.	495 lbs/310 lbs min.
Tear Strength, min. in machine and x-machine direction	ASTM D4533	67 lbs/40 lbs min.	80 lbs/50 lbs min.
Ultraviolet (UV) Radiation stability	ASTM D4355	50% strength retained min., after 500 hrs. in a xenon arc device	50% strength retained min., after 500 hrs. in a xenon arc device

[1] All geotextile properties are minimum average roll values (i.e., the test result for any sampled roll in a lot shall meet or exceed the values shown in the table).

Table V-C-19. Geotextile for Underground Drainage Filtration Properties (WSDOT 2008 Standard Specifications or most current version)

Geotextile Property Requirements[1]				
Geotextile Property	**Test Method**	**Class A**	**Class B**	**Class C**
AOS[2]	ASTM D4751	0.43 mm max. (#40 sieve)	0.25 mm max. (#60 sieve)	0.18 mm max. (#80 sieve)
Water Permittivity	ASTM D4491	0.5 sec^{-1} min.	0.4 sec^{-1} min.	0.3 sec^{-1} min.

[1] All geotextile properties are minimum average roll values (i.e., the test result for any sampled roll in a lot shall meet or exceed the values shown in the table).

[2] Apparent Opening Size (measure of diameter of the pores in the geotextile)

Table V-C-20. Geotextile Strength Properties for Impermeable Liner Protection

Geotextile Property	Test Method	Geotextile Property Requirements[1]
Grab Tensile Strength, min. in machine and x-machine direction	ASTM D4632	250 lbs min.
Grab Failure Strain, in machine and x-machine direction	ASTM D4632	>50%
Seam Breaking Strength (if seams are present)	ASTM D4632 and ASTM D4884 (adapted for grab test)	220 lbs min.
Puncture Resistance	ASTM D4833	125 lbs min.
Tear Strength, min. in machine and x-machine direction	ASTM D4533	90 lbs min.
Ultraviolet (UV) Radiation	ASTM D4355	50% strength stability retained min., after 500 hrs. in weatherometer

[1] All geotextile properties are minimum average roll values (i.e., the test result for any sampled roll in a lot shall meet or exceed the values shown in the table).

Applications

1. For sand filter drain strip between the sand and the drain rock or gravel layers specify Geotextile Properties for Underground Drainage, moderate survivability, Class A, from Table V-C-18 and Table V-C-19 in the Geotextile Specifications.

2. For sand filter matting located immediately above the impermeable liner and below the drains, the function of the geotextile is to protect the impermeable liner by acting as a cushion. The specification provided in Table V-C-20 should be used to specify survivability properties for the liner protection application. Table V-C-19, Class C should be used for filtration properties. Only nonwoven geotextiles are appropriate for the liner protection application.

3. For an infiltration drain specify Geotextile for Underground Drainage, low survivability, Class C, from Table V-C-18 and Table V-C-19 in the Geotextile Specifications.

4. For a sand bed cover a geotextile fabric is placed exposed on top of the sand layer to trap debris brought in by the stormwater and to protect the sand, facilitating easy cleaning of the surface of the sand layer. However, a geotextile is not the best product for this application. A polyethylene or polypropylene geonet would be better. The geonet material should have high UV resistance (90% or more strength retained after 500 hours in the weatherometer, ASTM D4355), and high permittivity (ASTM D4491, 0.8 sec. -1 or more) and percent open area (CWO-22125, 10% or more). Tensile strength should be on the order of 200 lbs grab (ASTM D4632) or more.

Courtesy of Tony Allen, Geotechnical Engineer-WSDOT

Reference for Tables 1 and 2: Section 9-33.2 "*Geotextile Properties,*" 1998 Standard Specifications for Road, Bridge, and Municipal Construction

Appendix D Turbulence and Short-Circuiting Factor

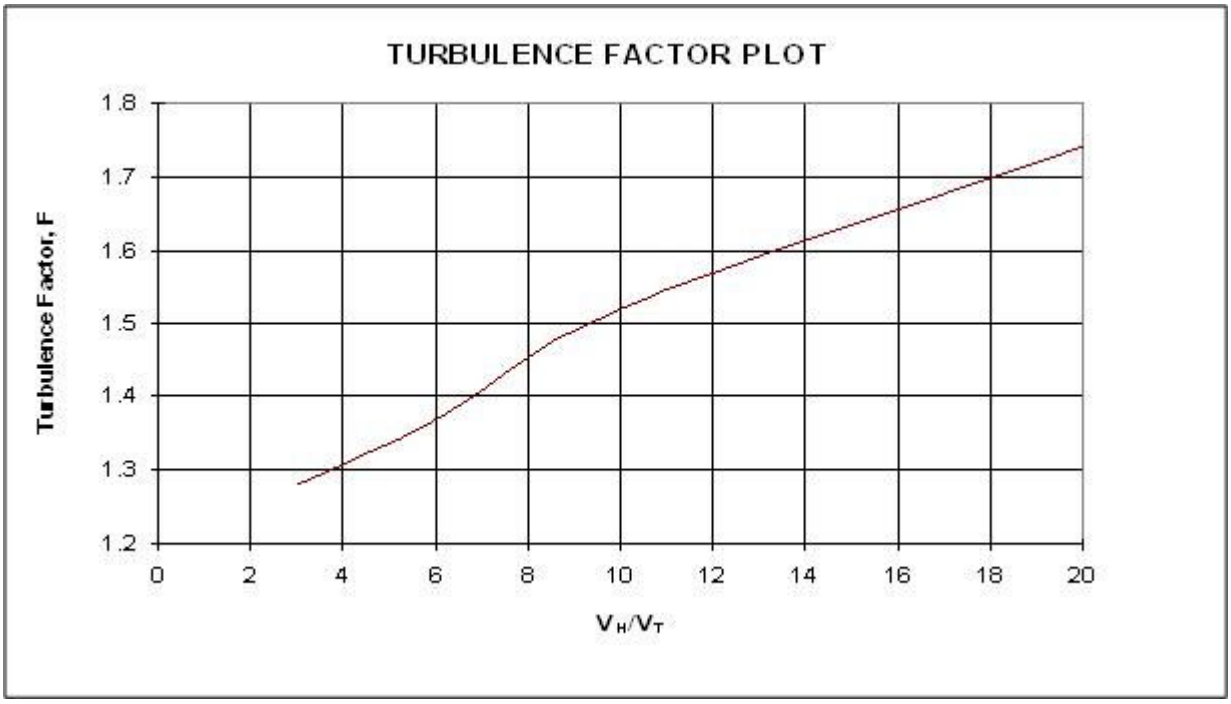

V_H/V_T	Turbulence Factor (F_T)	F = 1.2 (F_T)
20	1.45	1.74
15	1.37	1.64
10	1.27	1.52
6	1.14	1.37
3	1.07	1.28

Figure V-D-40. Recommended Values of* F *for Various Values of v_H/Vt

THIS PAGE INTENTIONALLY LEFT BLANK.

Volume VI – Low-Impact Development and On-Site Stormwater Management Table of Contents

Purpose of this Volume 749
Content and Organization of this Volume 749

Chapter 1 General Requirements 750

1.1 Objectives 750
1.2 Site Assessment 750
1.3 Site Planning and Layout 750
1.4 Retain Native Vegetation 751
1.5 Minimize Clearing and Grading Impacts 751

Chapter 2 Low Impact Development Best Management Practices 752

2.1 Application 752
2.2 Best Management Practices 752
2.2.1 Dispersion and Soil Quality BMPs 753
2.2.1.1 BMP L610 Downspout Dispersion 753
2.2.1.2 BMP L611 Concentrated Flow Dispersion 759
2.2.1.3 BMP L612 Sheet Flow Dispersion 761
2.2.1.4 BMP L613 Post-Construction Soil Quality and Depth 763
2.2.1.5 BMP L614 Full Dispersion 766
2.2.2 Site Design BMPs 769
2.2.2.1 BMP L620 Preserving Natural Vegetation 769
2.2.2.2 BMP L621 Better Site Design 770
2.2.3 Low Impact Development BMPS 771
2.2.3.1 BMP L630 Bioretention Areas (Rain Gardens) 772
2.2.3.2 BMP L631 Vegetated Rooftops (Green Roofs) 779
2.2.3.3 BMP L632 Rainfall Reuse Systems 780
2.2.3.4 BMP L633 Alternate Paving Surfaces 781
2.2.3.5 BMP L634 Minimal Excavation Foundations 786
2.2.3.6 BMP L635 Reverse Slope Sidewalks 787

THIS PAGE INTENTIONALLY LEFT BLANK.

Volume VI

Volume VI: Low Impact Development and On-Site Stormwater Management

Purpose of this Volume

This volume focuses on the concept of low impact development. Low impact development is a stormwater management strategy that emphasizes conservation and use of existing natural site features integrated with engineered, small-scale stormwater controls to more closely mimic predevelopment hydrologic conditions. On-site stormwater management techniques are a key component of low impact development.

All sites required to meet Minimum Requirement #5 must use dispersion and soil quality BMPs described under on-site management below to the maximum extent practicable unless their use would cause flooding or erosion impacts.

This section should be used in conjunction with "Low Impact Development: Technical Guidance Manual for Puget Sound", which can be found on the Puget Sound Partnership website: www.psp.wa.gov/documents.html

Content and Organization of this Volume

Volume VI contains two chapters:

- Chapter 1 provides an overview of the general requirements for low impact development.
- Chapter 2 provides detailed information pertaining to Best Management Practices (BMPS) for low impact development.

Chapter 1 General Requirements

1.1 Objectives

The goal of low impact development is to manage stormwater generated from new development and redevelopment on-site so there will be no negative impacts to adjacent or downstream properties and no degradation to ground or surface waters.

The following are list of objectives for low impact design:

- Minimize the impacts of increased stormwater runoff from new development and redevelopment by maintaining peak flow frequencies and durations of the site's undisturbed hydrologic condition.
- For residential projects, retain and/or restore 65% of the site's native soils and vegetation. For commercial projects, retain and/or restore 25% of the site's native soils and vegetation.
- Retain and incorporate natural site features that promote infiltration of stormwater on the developed site.
- Utilize LID BMPs and minimize the use of traditional technologies to manage stormwater quality and quantity.
- Manage stormwater as close to the source as possible.

1.2 Site Assessment

Before implementing LID practices it is necessary to perform a site assessment which includes an assessment of both on-site and off-site conditions and features. See Chapter 2 of the "Low Impact Development: Technical Guidance Manual for Puget Sound" for more information on steps for performing a site assessment.

1.3 Site Planning and Layout

Sites should be configured to reduce impervious surfaces and utilize natural drainage features. Chapter 3 of the "Low Impact Development: Technical Guidance Manual for Puget Sound" contains information and techniques for site planning. City of Auburn codes must be adhered to.

1.4 Retain Native Vegetation

Retain native vegetation to the maximum extent practicable in order to:

- Reduce total impervious surface coverage
- Provide infiltration areas for overland flows generated in adjacent developed portions of the project
- Maintain the natural hydrology of the site.

See BMP L620 and Chapter 4 of "Low Impact Development: Technical Guidance Manual for Puget Sound" for techniques on retaining native vegetation.

1.5 Minimize Clearing and Grading Impacts

- Conduct a soils analysis prior to clearing and grading to identify predevelopment soil types and infiltration capabilities.
- Keep grading to a minimum by incorporating natural topography.
- Always use appropriate erosion and sediment control techniques when clearing and grading. See Volume 2 of this manual for erosion and sediment control measures.
- Utilize techniques from Chapter 5 of "Low Impact Development: Technical Guidance Manual for Puget Sound".

Chapter 2 Low Impact Development Best Management Practices

This Chapter presents the methods for analysis and design of on-site stormwater management Best Management Practices (BMPs). Design procedures and requirements for stormwater management BMPs meeting Minimum Requirement #7, Flow Control, are contained in Volume 3.

2.1 Application

Most of the on-site BMPs serve to control runoff flow rate as well as to provide runoff treatment. Non-pollution generating surfaces, such as rooftops and patios, may also use the infiltration BMPs contained in Volume 3, which provide flow control only. Pollution generating surfaces, such as driveways, small parking lots, and landscaping, must use on-site BMPs to provide some water quality treatment.

The design criteria components in this manual must be used in order to obtain runoff credits. Runoff credits are considered when determining project thresholds.

2.2 Best Management Practices

The following Low Impact Development BMPs are discussed in this Chapter:

2.2.1 Dispersion and Soil Quality BMPs

BMP L610 Downspout Dispersion
BMP L611 Concentrated Flow Dispersion
BMP L612 Sheet Flow Dispersion
BMP L613 Post-Construction Soil Quality and Depth
BMP L614 Full Dispersion

2.2.2 Site Design BMPs

BMP L620 Preserving Natural Vegetation
BMP L621 Better Site Design

2.2.3 Structural Low Impact Development BMPs

BMP L630 Bioretention Areas (Rain gardens)
BMP L631 Vegetated Rooftops
BMP L632 Rainfall Reuse
BMP L633 Alternate Paving Systems
BMP L634 Minimal Excavation Foundations
BMP L635 Reverse Slope Sidewalks

Infiltration BMPs can be found in Volume 3 and Volume 5.

Projects shall employ these BMPs to infiltrate, disperse, and retain stormwater runoff on site to the maximum extent practicable without causing flooding or erosion impacts. **Infiltration and dispersion systems require approval by the City.** Sites that can fully infiltrate (see Volume 3, Chapter 3 and Volume 5, Chapter 5) or fully disperse (see BMP L614) are not required to provide runoff treatment or flow control facilities. Full dispersion credit is limited to sites with a maximum of 10% effective impervious area that is dispersed through 65% of the site maintained in natural vegetation.

Impervious surfaces that are not fully dispersed should be partially dispersed to the maximum extent practicable and then hydrologically modeled. Minimum requirements still apply to those portions of a site that exceed thresholds described in Volume 1.

2.2.1 Dispersion and Soil Quality BMPs

2.2.1.1 BMP L610 Downspout Dispersion

Purpose and Definition

Downspout dispersion BMPs are splashblocks or gravel-filled dispersion trenches that serve to spread roof runoff over vegetated pervious areas. Dispersion attenuates peak flows by slowing entry of the runoff into the conveyance system, allows for some infiltration, and provides some water quality benefits.

Applications

Downspout dispersion may be used on all sites that cannot infiltrate roof runoff and that meet the feasibility setback requirements.

Flow Credit for Roof Downspout Dispersion

If roof runoff is dispersed according to the requirements of this section, and the vegetative flowpath of the roof runoff is 50 feet or greater through undisturbed native landscape or lawn/landscape area that meets BMP L613, the roof area may be modeled as a grassed surface.

General Design Criteria for Dispersion Trenches and Splashblocks

Also see Additional Design Criteria sections.

- Maintain a vegetated flowpath of at least 50 feet in length between the outlet of the trench and the top of slopes steeper than 20% and greater than 10 feet high. A geotechnical analysis and report must be prepared addressing the potential impact of the facility on the slope.
- Vegetated flowpaths must be covered with well-established lawn or pasture, landscaping with well-established groundcover, or native vegetation with natural groundcover. The groundcover shall be dense enough to help disperse and infiltrate flows and to prevent erosion.
- For sites with multiple dispersion trenches or splashblocks, a minimum separation of 10 feet is required between flowpaths. The City may require a larger separation based upon site conditions such as slope, soil type, and total contributing area.

- Place all dispersions systems at least 10 feet from any structure. If necessary, setbacks shall be increased from the minimum 10 feet in order to maintain a 1:1 side slope for future excavation and maintenance.
- Place all dispersion systems at least 5 feet from any property line. If necessary, setbacks shall be increased from the minimum 5 feet in order to maintain a 1:1 side slope for future excavation and maintenance.
- Setback dispersion systems from sensitive areas, steep slopes, landslide hazard areas, and erosion hazard areas as governed by Auburn City Code.
- No erosion or flooding of downstream properties shall result.
- Runoff discharged towards landslide hazard areas must be evaluated by a geotechnical engineer or qualified geologist. Do not place the discharge point on or above slopes greater than 20% or above erosion hazard areas without evaluation by a geotechnical engineer or qualified geologist and City approval.
- For sites with septic systems, place the discharge point downgradient of the drainfield primary and reserve areas. This requirement can be waived by the City's permit review staff if site topography will clearly prohibit flows from intersecting the drainfield.

Additional Design Criteria for Dispersion Trenches

- Design dispersion trenches as shown in Figure VI-2-1 and Figure VI-2-2.
- Maintain a vegetated flowpath of at least 25 feet in length between the outlet of the trench and any property line, structure, stream, wetland, or impervious surface. Sensitive area buffers may count towards flowpath lengths
- Maintain a vegetated flowpath of at least 50 feet in length between the outlet of the trench and any steep slope.
- Trenches serving up to 700 square feet of roof area may be simple 10-foot-long by 2-foot-wide gravel filled trenches as shown in Figure VI-2-1. For roof areas larger than 700 square feet, a dispersion trench with notched grade board as shown in Figure VI-2-2 may be used as approved by the City. The total length of this design must provide at least 10 feet of trench per 700 square feet of roof area and not exceed 50 feet.

Additional Design Criteria for Splashblocks

In general, if the ground is sloped away from the building foundation, and there is adequate vegetation and area for effective dispersion, splashblocks will adequately disperse storm runoff. If the ground is fairly level, if the structure includes a basement, or if foundation drains are proposed, splashblocks with downspout extensions may be a better choice because the discharge point is moved away from the foundation. Downspout extensions can include piping to a splashblock/discharge point a considerable distance from the downspout, as long as the runoff can travel through a well-vegetated area as described below.

The following conditions must be met to use splashblocks:

- Design splashblocks as shown in Figure VI-2-3.
- Maintain a vegetated flowpath of at least 50 feet between the discharge point and any property line, structure, stream, wetland, lake, or other impervious surface. Sensitive area buffers may count toward flowpath lengths.
- Do not direct flows onto sidewalks.
- A maximum of 700 square feet of roof area may drain to each splashblock.
- Place a splashblock or a pad of crushed rock (2 feet wide by 3 feet long by 6 inches deep) at each downspout discharge point.
- No erosion or flooding of downstream properties may result.
- Splashblocks may not be placed on or above slopes greater than 20% or above erosion hazard areas without evaluation by a geotechnical engineer or qualified geologist and approval by the City.

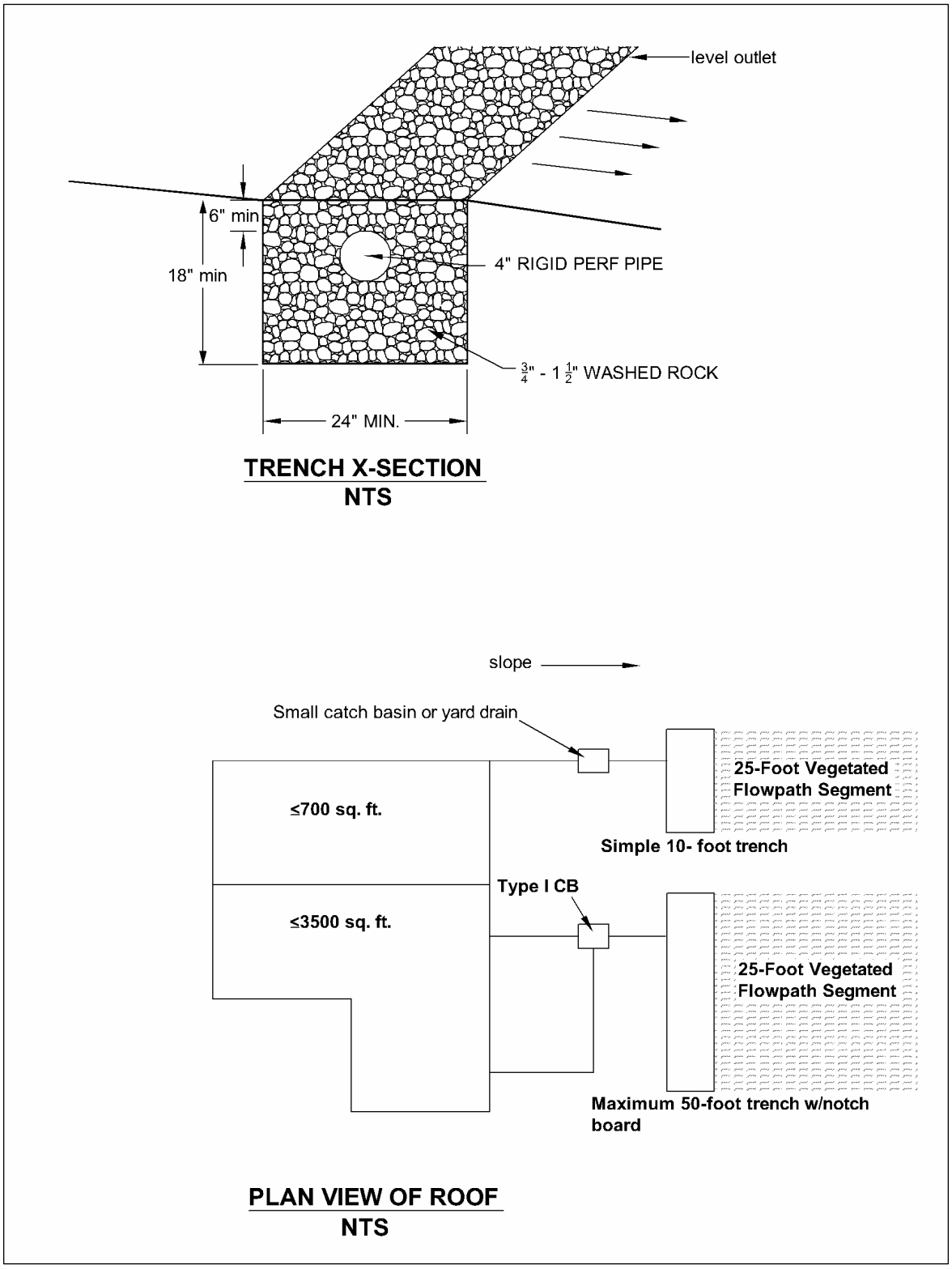

Figure VI-2-1. Typical Dispersion Trench

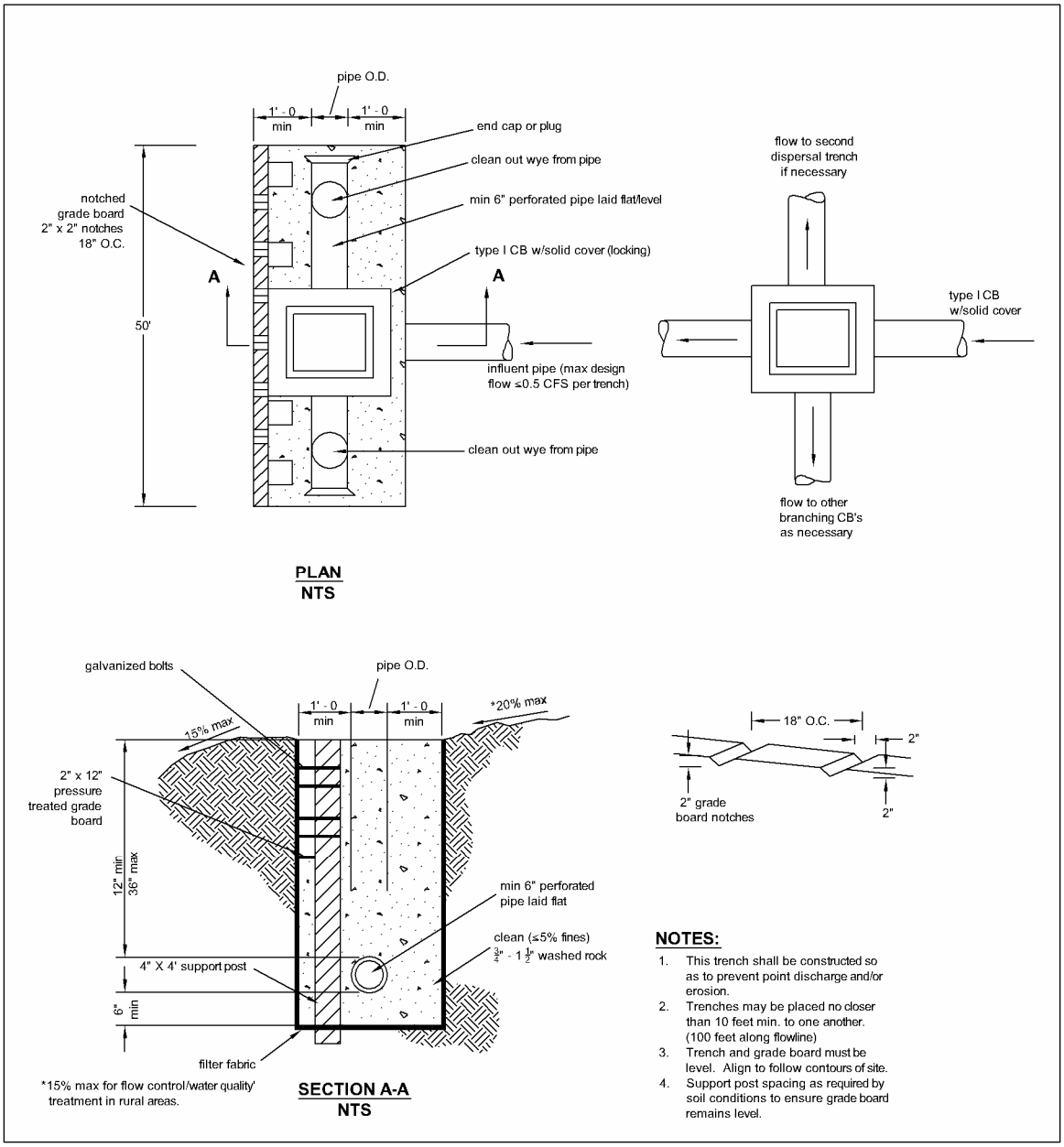

Figure VI-2-2. Standard Dispersion Trench with Notched Grade Board

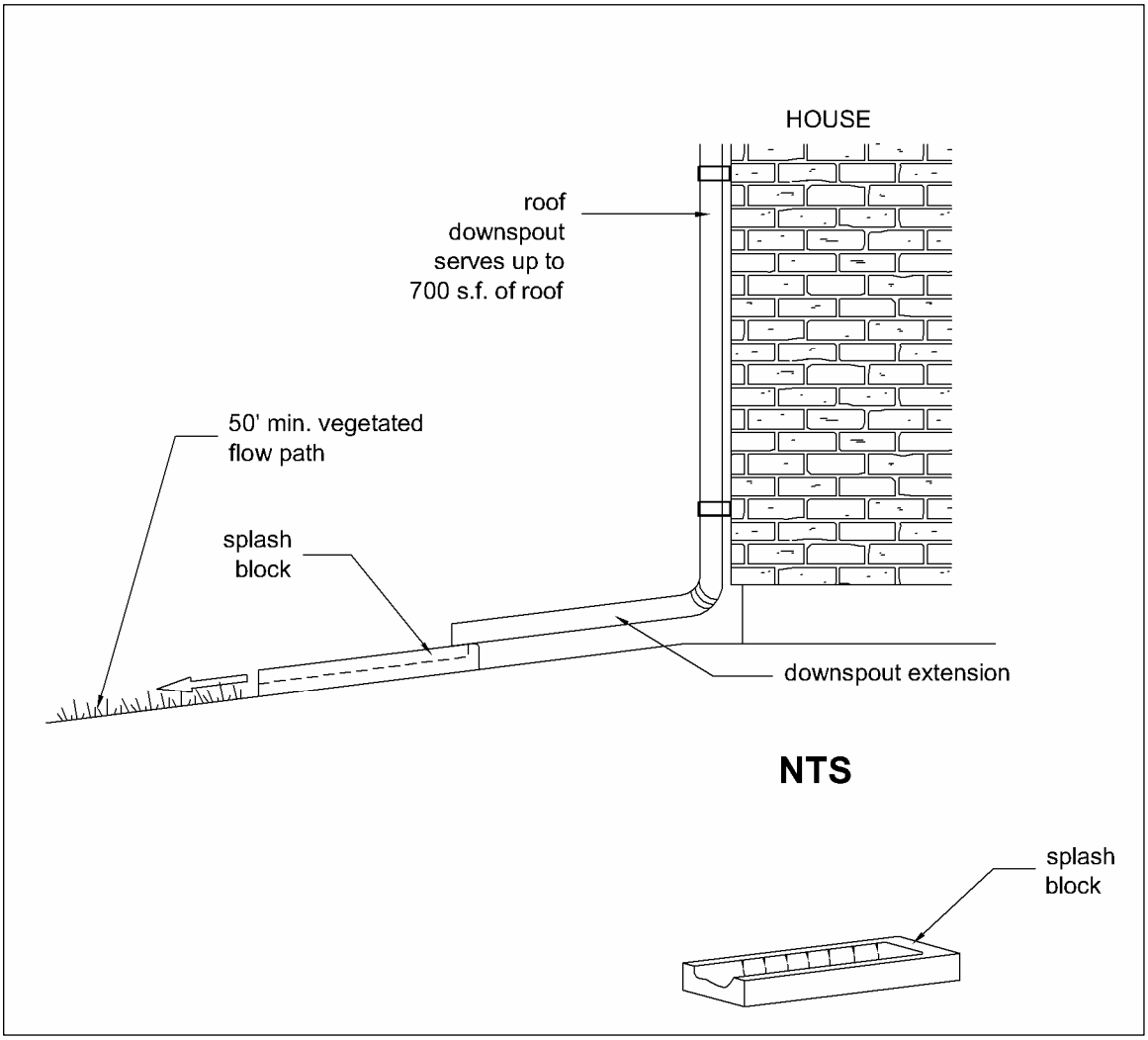

Figure VI-2-3. Typical Downspout Splashblock Dispersion

2.2.1.2 BMP L611 Concentrated Flow Dispersion

Purpose and Definition

Dispersion of concentrated flows from driveways or other pavement through a vegetated pervious area attenuates peak flows by slowing entry of the runoff into the conveyance system, allows for some infiltration, and provides some water quality benefits.

Applications and Limitations

- Any situation where concentrated flow can be dispersed through vegetation.
- Dispersion for driveways will generally only be effective for single-family residences on large lots and in rural short plats. Lots proposed by short plats in urban areas will generally be too small to provide effective dispersion of driveway runoff.
- Figure VI-2-4 shows two possible ways of spreading flows from steep driveways.

Design Criteria

- Maintain a vegetated flowpath of at least 50 feet between the discharge point and any property line, structure, steep slope, stream, lake, wetland, lake, or other impervious surface.
- A maximum of 700 square feet of impervious area may drain to each concentrated flow dispersion BMP.
- Place a pad of crushed rock (2 feet wide by 3 feet long by 6 inches deep) at each discharge point.
- No erosion or flooding of downstream properties shall result.
- Runoff discharged towards landslide hazard areas must be evaluated by a geotechnical engineer or qualified geologist. The discharge point shall not be placed on or above slopes greater than 20% or above erosion hazard areas without evaluation by a geotechnical engineer or qualified geologist and approval by the City.
- For sites with septic systems, locate the discharge point downgradient of the drainfield primary and reserve areas. This requirement may be waived by the City if site topography clearly prohibits flows from intersecting the drainfield or where site conditions indicate that this is unnecessary (see Volume 3, Chapter 2).

Flow Credits for Concentrated Flow Dispersion

Where concentrated flow dispersion is used to disperse runoff into an undisturbed native landscape area or an area that meets the requirements of “Post-Construction Soil Quality and Depth”, and the vegetated flow path is at least 50 feet in length, the impervious area may be modeled as landscaped area.

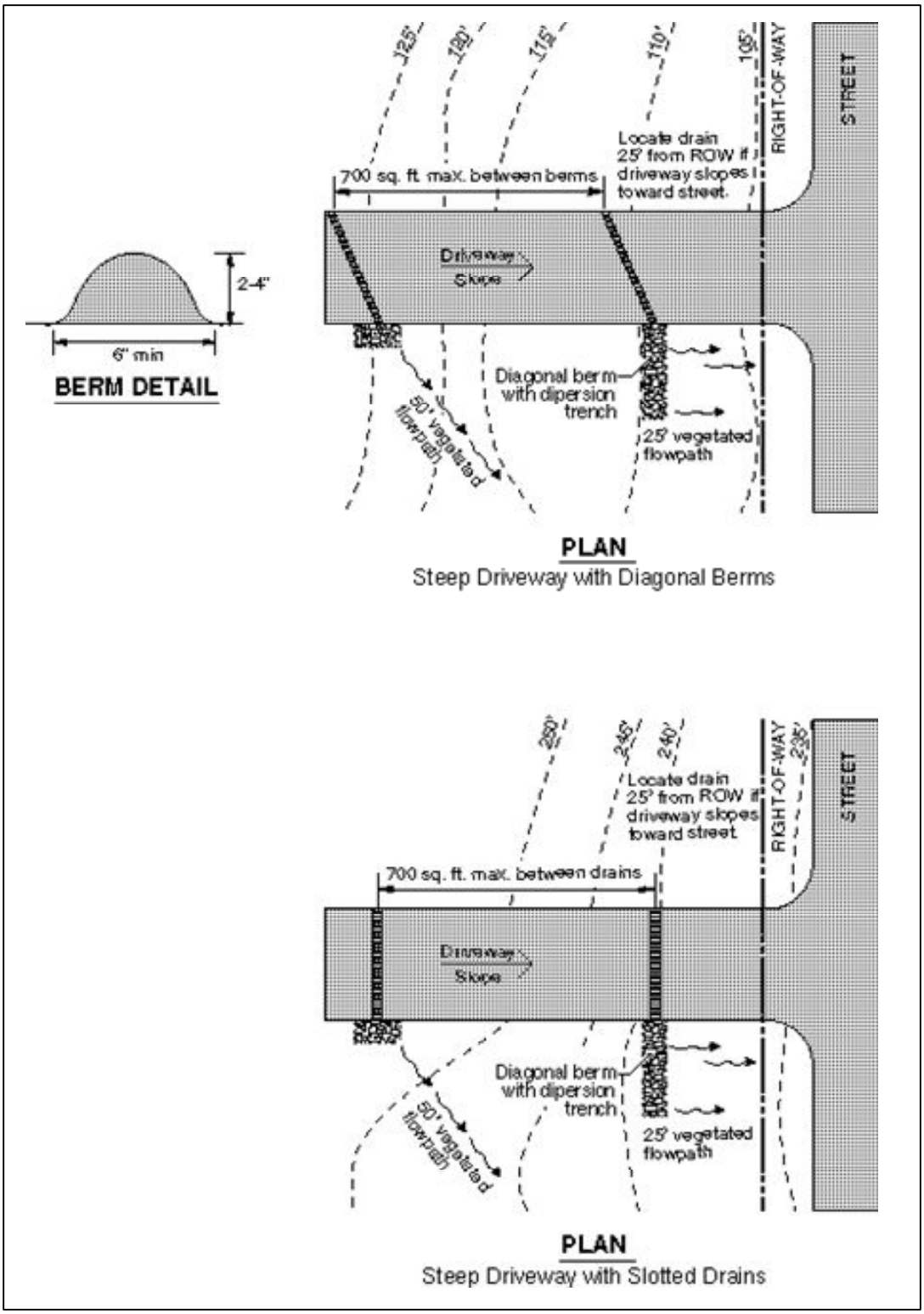

Figure VI-2-4. Typical Concentrated Flow Dispersion for Steep Driveways

2.2.1.3 BMP L612 Sheet Flow Dispersion

Purpose and Definition

Sheet flow dispersion is the simplest method of runoff control. This BMP can be used for any impervious or pervious surface that is graded so as to avoid concentrating flows. Because flows are already dispersed as they leave the surface, they need only traverse a narrow band of adjacent vegetation for effective attenuation and treatment.

Applications and Limitations

Flat or moderately sloping (<15% slope) impervious surfaces such as driveways, sport courts, patios, and roofs without gutters; sloping cleared areas that are comprised of bare soil, non-native landscaping, lawn, and/or pasture; or any situation where concentration of flows can be avoided.

Design Criteria

- See Figure VI-2-5 for details for driveways.
- Provide a 2-foot-wide transition zone to discourage channeling between the edge of the driveway pavement and the downslope vegetation, or under building eaves. This may be an extension of subgrade material (crushed rock), modular pavement, drain rock, or other material acceptable to the City.
- Provide a vegetated buffer width of 10 feet of vegetation for up to 20 feet of width of paved or impervious surface. Add an additional 5 feet of width for each additional 20 feet of width or fraction thereof.
- Provide a vegetated buffer width of 25 feet of vegetation for up to 150 feet of contributing cleared area (i.e., bare soil, non-native landscaping, lawn, and/or pasture). Slopes within the 25-foot minimum flowpath through vegetation should be no steeper than 8 percent. If this criterion cannot be met due to site constraints, the 25-foot flowpath length must be increased 1.5 feet for each percent increase in slope above 8%.
- No erosion or flooding of downstream properties may result.
- Runoff discharge toward landslide hazard areas must be evaluated by a geotechnical engineer or a qualified geologist. Do not place the discharge point on or above slopes greater than 20% or above erosion hazard areas without evaluation by a geotechnical engineer or qualified geologist and approval by the City.
- For sites with septic systems, place the discharge point downgradient of the drainfield primary and reserve areas. This requirement may be waived by the City if site topography clearly prohibits flows from intersecting the drainfield or where site conditions indicate that this is unnecessary (see Volume 3, Chapter 2).

Flow Credits for Sheet Flow Dispersion

Where sheet flow dispersion is used to disperse runoff into an undisturbed native landscape area or an area that meets the requirements of “Post-Construction Soil Quality and Depth”, the impervious area may be modeled as landscaped area.

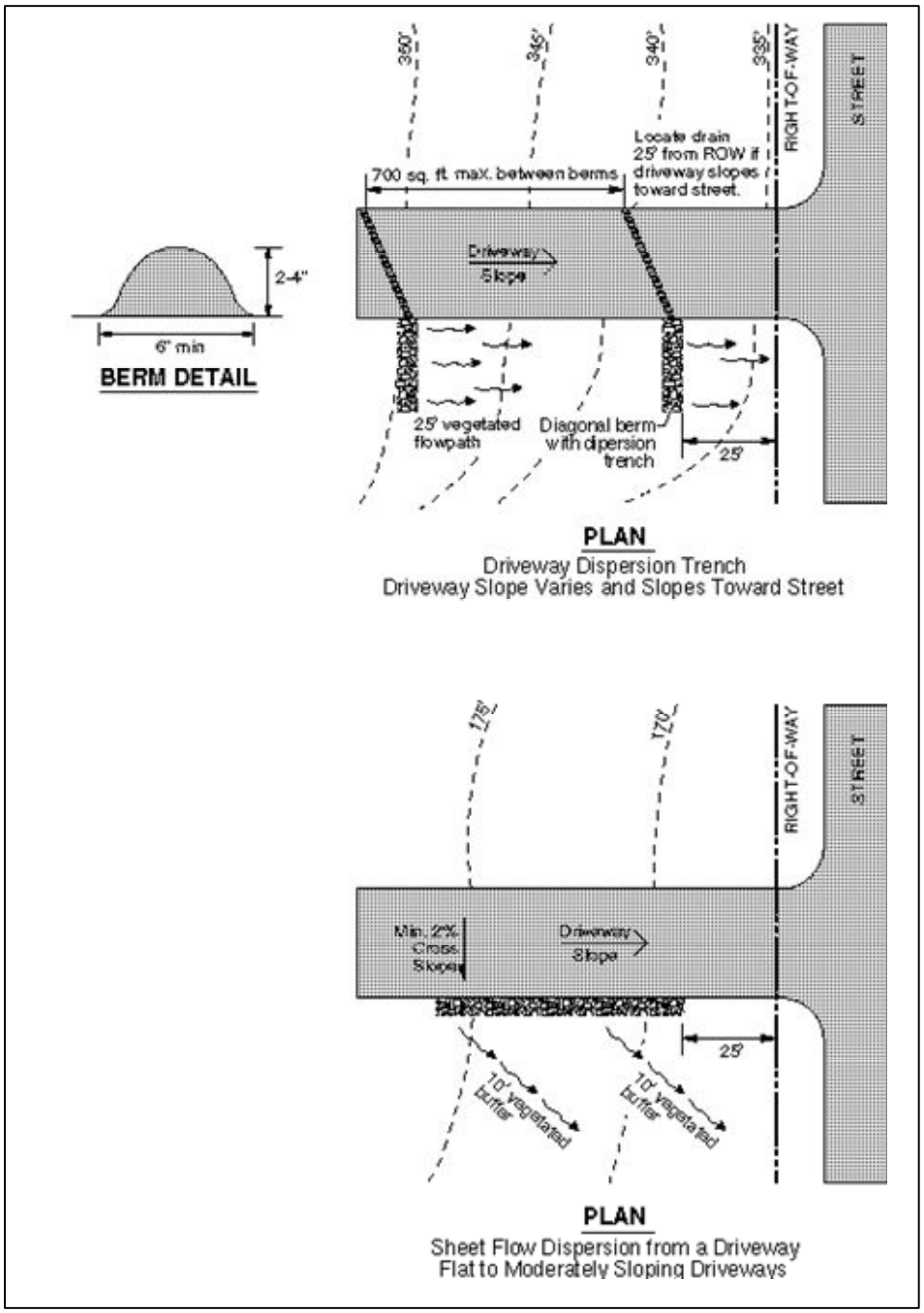

Figure VI-2-5. Sheet Flow Dispersion for Driveways

2.2.1.4 BMP L613 Post-Construction Soil Quality and Depth

Purpose and Definition

Naturally occurring (undisturbed) soil and vegetation provide important stormwater functions including: water infiltration; nutrient, sediment, and pollutant adsorption; sediment and pollutant biofiltration; water interflow storage and transmission; and pollutant decomposition. These functions are largely lost when development strips away native soil and vegetation and replaces it with minimal topsoil and sod. Not only are these important stormwater functions lost, but such landscapes themselves become pollution generating pervious surfaces due to increased use of pesticides, fertilizers, and other landscaping and household/industrial chemicals, the concentration of pet wastes, and pollutants that accompany roadside litter.

Applications and Limitations

- Soil amendments are required for the disturbed areas of sites subject to Minimum Requirement #5.
- Where Minimum Requirement #5 does not apply, and the site is proposing a traditional lawn installation, compost-amended lawn soil is strongly encouraged.
- Use soil amendments in areas that will be incorporated into the stormwater drainage system such as vegetated channels, rain gardens, bioretention areas, and lawn and landscaped areas.

Design Criteria

Soil Retention

- The duff layer and native topsoil should be retained in an undisturbed state to the maximum extent practicable. In any areas requiring grading, remove and stockpile the duff layer and topsoil on site in a designated, controlled area, not adjacent to public resources and critical areas, to be reapplied to other portions of the site where feasible.

Soil Quality

- All areas subject to clearing and grading that have not been covered by impervious surface, incorporated into a drainage facility or engineered as structural fill or slope shall, at project completion, demonstrate the following:
  - A topsoil layer with a minimum organic matter content of ten percent dry weight in planting beds, and 5% organic matter content in turf areas, and a pH from 6.0 to 8.0 or matching the pH of the original undisturbed soil.
  - The topsoil layer shall have a minimum depth of eight inches except where tree roots limit the depth of incorporation of amendments needed to meet the criteria. Subsoils below the topsoil layer should be scarified at least 4 inches with some incorporation of the upper material to avoid stratified layers, where feasible.

- Planting beds have been mulched with 2 inches of organic material
- Quality of compost and other materials used to meet the organic content requirements:
  - The organic content for "pre-approved" amendment rates can be met only using compost that meets the definition of "composted materials" in WAC 173-350-220. The WAC is available online at: http://www.ecy.wa.gov/programs/swfa/facilities/350.html

    The compost must also have an organic matter content of 35% to 65%, and a carbon to nitrogen ratio below 25:1.

    The carbon to nitrogen ratio may be as high as 35:1 for plantings composed entirely of plants native to the Puget Sound Lowlands region.

  - Calculated amendment rates may be met through use of composted materials as defined above; or other organic materials amended to meet the carbon to nitrogen ratio requirements, and meeting the contaminant standards of Grade A Compost.
- The resulting soil is conducive to the type of vegetation to be established.

Implementation Options:

Use one of the following options to meet the post construction soil quality and depth requirements. Use the most recent version of "Guidelines for Resources for Implementing Soil Quality and Depth BMP T5.13" to meet the requirements of this BMP. This guidance can be found online at: www.soilsforsalmon.org

- Leave native vegetation and soil undisturbed, and protect from compaction during construction.
- Amend existing site topsoil or subsoil either at default "pre-approved" rates, or at custom calculated rates based on specifiers' tests of the soil and amendment.
- Stockpile existing topsoil during grading, and replace it prior to planting. Stockpiled topsoil must also be amended if needed to meet the organic matter or depth requirements, either at a default "pre-approved" rate or at a custom calculated rate.
- Import topsoil mix of sufficient organic content and depth to meet the requirements.

More than one method may be used on different portions of the same site. Soil that already meets the depth and organic matter quality standards, and is not compacted, does not need to be amended.

Maintenance

- Soil quality and depth should be established toward the end of construction and once established, should be protected from compaction, such as from large machinery use, and from erosion.
- Soil should be planted and mulched after installation.
- Plant debris or its equivalent should be left on the soil surface to replenish organic matter.
- It should be possible to reduce use of irrigation, fertilizers, herbicides, and pesticides. These activities should be adjusted where possible, rather than continuing to implement formerly established practices.

Flow Reduction Credits for BMP L613

Flow reduction credits can be taken in runoff modeling when Post-Construction Soil Quality and Depth is used as part of a dispersion design under the conditions described in:

BMP L610 Downspout Dispersion
BMP L611 Concentrated Flow Dispersion
BMP L612 Sheet Flow Dispersion
Volume 3, Appendix A

2.2.1.5 BMP L614 Full Dispersion

Purpose and Definition

This BMP allows for "fully dispersing" runoff from impervious surfaces and cleared areas of development sites that preserve at least 65% of the site (or a threshold discharge area on the site) in a forest or native condition.

Applications and Limitations

- Full dispersion can be used as long as the developed areas draining to the native vegetation do not have impervious surfaces that exceed 10% of the entire site.
- Other types of development that retain 65% of the site (or a threshold discharge area on the site) in a forested or native condition may also use these BMPs to avoid triggering the flow control facility requirement.
- Runoff must be dispersed into native areas.

Design Guidelines

- **Roof Downspouts -** Roof surfaces that comply with the downspout infiltration requirements in Volume 3, Chapter 3, are considered to be "fully dispersed" (i.e., zero percent effective imperviousness). All other roof surfaces are considered to be "fully dispersed" (i.e., at or approaching zero percent effective imperviousness) only if they are within a threshold discharge area that is or will be more than 65% forested (or native vegetative cover) and less than 10% impervious (total), and if they comply with the downspout dispersion requirements of BMP L610, and have vegetated flow paths through native vegetation exceeding 100 feet.
- **Driveway Dispersion -** Driveway surfaces are considered to be "fully dispersed" if they are within a threshold discharge area that is or will be more than 65% forested (or native vegetative cover) and less than 10% impervious (total), and if they comply with the driveway dispersion BMPs – BMP L611 and BMP L612 - and have flow paths through native vegetation exceeding 100 feet. This also holds true for any driveway surfaces that comply with the roadway dispersion BMPs described below.
- **Roadway Dispersion BMPs** - Roadway surfaces are considered to be "fully dispersed" if they are within a threshold discharge area that is or will be more than 65% forested (or native vegetative cover) and less than 10% impervious (total), and if they comply with the following dispersion requirements:
    - Roadway runoff dispersion is allowed only on rural neighborhood collectors and local access streets. To the extent feasible, disperse driveways to the same standards as roadways to ensure adequate water quality protection of downstream resources.
    - Design the road section to minimize collection and concentration of roadway runoff. Use sheet flow over roadway fill slopes (i.e., where roadway subgrade is above adjacent right-of-way) wherever possible to avoid concentration.
    - When it is necessary to collect and concentrate runoff from the roadway and adjacent upstream areas (e.g., in a ditch on a cut slope), concentrated flows

shall be incrementally discharged from the ditch via cross culverts or at the ends of cut sections. These incremental discharges of newly concentrated flows shall not exceed 0.5 cfs at any one discharge point from a ditch for the 100-year runoff event. Where flows at a particular ditch discharge point were already concentrated under existing site conditions (e.g., in a natural channel that crosses the roadway alignment), the 0.5-cfs limit would be in addition to the existing concentrated peak flows.

- Ditch discharge points with up to 0.2 cfs discharge for the peak 100-year flow shall use rock pads or dispersion trenches to disperse flows. Ditch discharge points with between 0.2 and 0.5 cfs discharge for the 100-year peak flow shall use only dispersion trenches to disperse flows.
- Dispersion trenches shall be designed to accept storm flows (free discharge) from a pipe, culvert, or ditch end, shall be aligned perpendicular to the flowpath, and shall be minimum 2 feet by 2 feet in section, 50 feet in length, filled with ¾-inch to 1½-inch washed rock, and provided with a level notched grade board (see Figure VI-2-2). Manifolds may be used to split flows up to 2 cfs discharge for the 100-year peak flow between up to 4 trenches. Dispersion trenches shall have a minimum spacing of 50 feet.
- After being dispersed with rock pads or trenches, flows from ditch discharge points must traverse a minimum of 100 feet of undisturbed native vegetation before leaving the project site, or entering an existing onsite channel carrying existing concentrated flows across the road alignment.
- Flowpaths from adjacent discharge points must not intersect within the 100-foot flowpath lengths, and dispersed flow from a discharge point must not be intercepted by another discharge point. To enhance the flow control and water quality effects of dispersion, the flowpath shall not exceed 15% slope, and shall be located within designated open space.
- Ditch discharge points shall be located a minimum of 100 feet upgradient of steep slopes (i.e., slopes steeper than 40%), wetlands, and streams.
- Where the City determines there is a potential for significant adverse impacts downstream (e.g., erosive steep slopes or existing downstream drainage problems), dispersion of roadway runoff may not be allowed, or other measures may be required. See Volume 1, Chapter 2 for geographic specific requirements.

Cleared Area Dispersion BMPs

The runoff from cleared areas that are comprised of bare soil, non-native landscaping, lawn, and/or pasture is considered to be "fully dispersed" if it is dispersed through at least 25 feet of native vegetation in accordance with the following criteria:

- The contributing flowpath of cleared area being dispersed must be no more than 150 feet.
- Slopes within the 25-foot minimum flowpath through native vegetation should be no steeper than 8%. If this criterion cannot be met due to site constraints, the 25-foot flowpath length must be increased 1.5 feet for each percent increase in slope above 8%.

2.2.2 Site Design BMPs

2.2.2.1 BMP L620 Preserving Natural Vegetation

Purpose

Preserving natural vegetation on-site to the maximum extent practicable will minimize the impacts of development on stormwater runoff.

Applications and Limitations

On lots that are one acre or greater, preservation of 65 percent or more of the site in natural vegetation will allow the use of full dispersion techniques presented in BMP L614. Sites that can fully disperse are not required to provide runoff treatment or flow control facilities.

Design Criteria

- Situate the preserved area to maximize the preservation of wetlands, and to buffer stream corridors.
- Place the preserved area in a separate tract or protect through recorded easements for individual lots.
- If feasible, locate the preserved area downslope from the building sites, since flow control and water quality are enhanced by flow dispersion through duff, undisturbed soils, and native vegetation.
- Show the preserved area on all property maps and clearly mark the area during clearing and construction on the site.

Maintenance

- Do not remove vegetation and trees from undisturbed areas, except for approved timber harvest activities and the removal of dangerous and diseased trees.

2.2.2.2 BMP L621 Better Site Design

Purpose

Fundamental hydrological concepts and stormwater management concepts can be applied at the site design phase that are:

- More integrated with natural topography,
- Reinforce the hydrologic cycle,
- More aesthetically pleasing, and
- Often less expensive to build.

Design Criteria

Define Development Envelope and Protected Areas – The first step in site planning is to define the development envelope. This is done by identifying protected areas, setbacks, easements and other site features, and by consulting applicable local standards and requirements. Site features to be protected may include important existing trees, steep slopes, erosive soils, riparian areas, or wetlands.

By keeping the development envelope compact, environmental impacts can be minimized, construction costs can be reduced, and many of the site's most attractive landscape features can be retained. In some cases, economics or other factors may not allow avoidance of all sensitive areas. In these cases, care can be taken to mitigate the impacts of development through site work and other landscape treatments.

Minimize Directly Connected Impervious Areas

Impervious areas directly connected to the storm drain system are the greatest contributors to urban nonpoint source pollution. Minimize these directly connected impervious areas. This can be done by limiting overall impervious land coverage or by infiltrating and/or dispersing runoff from these impervious areas.

- **Maximize Permeability** - Within the development envelope, many opportunities are available to maximize the permeability of new construction. These include minimizing impervious areas, paving with permeable materials, clustering buildings, and reducing the land coverage of buildings by smaller footprints. All of these strategies make more land available for infiltration and dispersion through natural vegetation.
- **Build Narrower Streets** - More than any other single element, street design has a powerful impact on stormwater quantity and quality. In residential development, streets and other transportation-related structures typically can comprise between 60 and 70 percent of the total impervious area, and, unlike rooftops, streets are almost always directly connected to the stormwater conveyance system.
- **Maximize Choices for Mobility** - Given the costs of automobile use, both in land area consumed and pollutants generated, maximizing choices for mobility is a basic principle for environmentally responsible site design. By designing residential

developments to promote alternatives to automobile use, a primary source of stormwater pollution can be mitigated.

- **Use Drainage as a Design Element** - Unlike conveyance storm drain systems that hide water beneath the surface and work independently of surface topography, a drainage system for stormwater infiltration or dispersion can work with natural land forms and land uses to become a major design element of a site plan.

2.2.3 Low Impact Development BMPS

Low impact development BMPs are structural BMPs that can be used to manage stormwater on-site. Using LID techniques can reduce surface runoff. For each category, basic design criteria is included. The design criteria components in this manual must be used in order to obtain runoff credits. Runoff credits are considered when determining project thresholds.

The guidance provided in "Low Impact Development: Technical Guidance Manual for Puget Sound", found on the Puget Sound Partnership website: www.psp.wa.gov, should also be used in design.

2.2.3.1 BMP L630 Bioretention Areas (Rain Gardens)

Purpose and Definition

Bioretention areas are shallow stormwater retention systems designed to mimic forested systems by controlling stormwater through detention, infiltration, and evapotranspiration. Bioretention areas provide water quality treatment through sedimentation, filtration, adsorption, and phytoremediation. Bioretention facilities are integrated into the landscape to mimic natural hydrologic conditions better. Bioretention facilities may be used as a water quality facility or a water quality and flow control (retention) facility.

Applicability and Limitations

- Rain gardens can be used as on-lot retention facilities.
- Rain gardens may be used to receive roof runoff in areas where traditional infiltration is not feasible.
- Three feet of clearance is necessary between the lowest elevation of the bioretention soil or any underlying gravel layer and the seasonal high groundwater elevation or other impermeable layer if the area tributary to the facility meets or exceeds any of the following:
  - 5000 square feet of pollution-generating impervious surface
  - 10,000 square feet of impervious area
  - ¾ acre of lawn and landscape
- For bioretention systems with a contributing area less than the above thresholds, a minimum of 1 foot of clearance is required from the seasonal high groundwater or other impermeable layer.
- Bioretention facilities can be used in parking lots and any other type of development.
- Bioretention systems may meet the requirements for basic and enhanced treatment when soil is designed in accordance with the requirements below and at least 91% of the influent runoff volume using WWHM is infiltrated. Drawdown requirements must also be met.

Setback and Site Constraints

- Assure that water movement through the surface soils and interflow will remain unobstructed and soils will remain uncompacted.
- Locate bioretention facilities at least 10 feet from any structure or property line unless approved in writing by the City.
- Locate bioretention facilities at least 50 feet back from slopes with a grade of 20% or greater. A geotechnical analysis must be prepared addressing the potential impact of the facility on the slope if closer than 50 feet or greater than 20%.

Design Criteria

Flow Entrance/Presetting

- Flow velocity entering the facility should be less than 1 ft/sec.
- Use one of the four types of flow entrances:
  - Dispersed, low velocity flow across a grade or landscape area.
  - Dispersed flow across pavement or gravel and past wheel stops for parking areas.
  - Dispersed curb cuts for driveway or parking lot areas. Include rock or other erosion protection material in the channel entrance to dissipate energy.
  - Pipe flow entrance. Include rock or other erosion protection material at the facility entrance to dissipate energy and/or provide flow dispersion.
- Do not place woody plants directly in the entrance flow path as they can restrict or concentrate flows.
- A minimum 1-inch grade change between the edge of a contributing impervious surface and the vegetated flow entrance is required.
- Install flow diversion and erosion control measures to protect the bioretention area from sedimentation until the upstream area is stabilized.
- If the catchment area exceeds 2,000 square feet, a presettling facility may be required.

Cell Ponding Area

- The ponding area provides for surface storage and particulate settling,
- Ponding depth and drawdown rate provide variable conditions that allow for a range of appropriate plant species. Soil must be allowed to dry out periodically in order to:
  - Restore hydraulic capacity of system.
  - Maintain infiltration rates.
  - Maintain adequate soil oxygen levels for healthy soil biota and vegetation.
  - Provide proper soil conditions for biodegradation and retention of pollutants.
  - Prevent conditions supportive of mosquito breeding.
- The ponding depth shall be a maximum of 12 inches.
- The surface pool drawdown time shall be 24 hours.
- The minimum freeboard measured from the invert of the overflow pipe or earthen channel to facility overtopping elevation shall be 2” for drainage areas less than 1,000 square feet and 6” for drainage areas 1,000 square feet or greater.

- If berming is used to achieve the minimum top elevation, maximum slope on berm shall be 4H:1V, and minimum top width of design berm shall be 1 foot. Soil for berming shall be imported bioretention soil or amended native soil compacted to a minimum of 90% dry density.

Overflow

- Unless designed for full infiltration of the entire runoff volume, bioretention systems must include an overflow.
- A drain pipe installed at the designed maximum ponding elevation and connected to a downstream BMP or an approved discharge point can be used as the overflow.
- Overflow shall be designed to convey the 100-year recurrence interval flow.

Soils

- For bioretention systems to meet the requirements for basic and enhanced treatment the following requirements must be met:
- The bioretention soil mix (BSM) shall meet the following requirements:
  - Have an infiltration rate between 1 and 2.4 inches per hour.
  - The CEC must be at least 5 meq/100 grams of dry soil.
  - The soil mix should be about 40% by volume compost and about 60% by volume aggregate component. The aggregate component shall meet the specifications in Table VI-2-1
  - The compost component shall be stable, mature, and derived from organic waste materials including yard debris, wood wastes, or other organic matter. Compost must meet the Washington State compost regulations in WAC 173-350, which is available at http://www.ecy.wa.gov/programs/compost

Table VI-2-1. Bioretention Soil Mix Aggregate Component

Sieve Size	Percent Passing
3/8”	100
#4	95-100
#10	75-90
#40	25-40
#100	4-10
#200	2-5

  - Minimum depth of treatment soil must be 18 inches.
  - Soil depths of 24” and greater should be considered to provide improved removal of nutrients as needed, including phosphorus.

- For facilities that infiltrate and do not have an underdrain, a soils report, prepared by a soils professional, shall be required and must address the following for each bioretention area:
  - A minimum of one soil log or test pit is required at each facility.
  - The soil log shall extend a minimum of 4 feet below the bottom of the subgrade (the lowest point of excavation).
  - The soil log must describe the USDA textural class of the soil horizon through the depth of the log and note any evidence of high groundwater level, such as mottling.
  - Use infiltration rates of the native soil when sizing and modeling bioretention systems.

Underdrain

Only install underdrains in bioretention areas if:

- Infiltration is not permitted and/or a liner is used, or
- Where infiltration rates are not adequate to meet the maximum pool drawdown time.
- Where the facility is not utilized for infiltration.

Underdrain pipe diameter will depend on hydraulic capacity required, 6-inch minimum.

Use a geotextile fabric between the soil layer and underdrain.

Planting

- Plants must be tolerant of summer drought, ponding fluctuations, and saturated soil conditions.
- Consider rooting depth when choosing plants. Roots must not damage underground infrastructure.
- Locate slotted and perforated pipe at least 5 feet from tree roots and side sewer pipes.
- Consider adjacent plant communities and potential invasive species.
- Consider aesthetics, rain gardens should blend into surrounding landscapes.
- The “Low Impact Development: Technical Guidance Manual for Puget Sound” Appendix 3 contains information for selecting proper bioretention vegetation.

Mulch Layer

- Bioretention areas should be designed with a mulch layer. Properly selected mulch material reduces weed establishment, regulates soil temperatures and moisture, and adds organic matter to soil. Mulch should be:
  - Compost in the bottom of the facilities,
  - Wood chip mulch composed of shredded or chipped hardwood or softwood on cell slopes,
  - Free of weed seeds, soil, roots, and other material that is not trunk or branch wood and bark,
  - A maximum of 3 inches thick for compost or 4 inches thick for wood chips.
- Mulch shall not include grass clippings, mineral aggregate or pure bark.
- A dense groundcover can be used as an alternative to mulch though mulch most be used until the dense groundcover is established.

Modeling and Sizing

For sites with contributing area less than 2,000 square feet:

Table VI-2-2 provides the square footage of the bottom of the rain garden per 1000 square feet of roof area.

The same method of sizing can be used for rain gardens receiving driveway runoff if the soils meet the water quality treatment requirements outlined in Section 2.2.3.1 in the Soils subsection, or the runoff passes through a basic treatment facility before reaching the rain garden. Collection areas greater than 2000 square feet must be designed by a professional engineer.

Table VI-2-2. Sizing Table for Rain Gardens

Soil Type	Raingarden bottom (square feet)
Coarse sands and cobbles	25
Medium sands	60
Fine sands, loamy sands	130
Sandy loam	160
Loam	225

For sites with contributing areas 2,000 square feet or more:

Use WWHM and model the facility as an infiltration facility with appropriate stage-storage and overflow/outflow rates. Bioretention cells may be modeled as a layer of soil with infiltration to underlying soil, ponding, and overflow. The tributary area, cell bottom area, and ponding depth should be iteratively sized until the duration curves and/or peak volumes meet the flow control requirements.

NOTE: WWHM Pro has the ability to model bioretention areas with or without underdrains so facility will be sized differently than described above. Contact the Washington State Department of Ecology for more information. Use the assumptions in Table VI-2-3 when sizing the facilities.

Table VI-2-3. Modeling Assumptions for Rain Garden Sizing

Variable	Assumption
Computational Time Step	15 minutes
Inflows to Facility	Surface flow and interflow from drainage area routed to facility
Precipitation and Evaporation Applied to Facility	Yes
Bioretention Soil Infiltration Rate	For imported soils, for sites that have a contributing area of less than 5,000 square feet of pollution generating surfaces, less than 10,000 square feet of impervious area, and less than ¾ acre of landscaped area, reduce the infiltration rate of the BSM by a factor of 2. For sites above these thresholds, a reductions factor of 4 shall be applied. For compost amended native soil, rate is equal to native soil design infiltration rate.
Bioretention Soil Porosity	40%
Bioretention Soil Depth	Minimum of 18 inches.
Native Soil Infiltration Rate	Measured infiltration rate with applicable safety factors. See Volume III for more information on infiltration rate determination.
Infiltration Across Wetted Surface Area	Only if sides slopes are 3:1 or flatter
Overflow	Overflow elevation set at maximum ponding elevation (excluding freeboard). May be modeled as weir flow over rider edge or riser notch.

2.2.3.2 BMP L631 Vegetated Rooftops (Green Roofs)

Purpose and Definition

Vegetated rooftops, also know as green roofs or eco-roofs, are veneers of living vegetation that are installed on top of conventional roofs. A green roof is an extension of the existing roof, which involves a special root repelling membrane, a drainage system, a lightweight growing medium, and plants. Vegetated walls and slopes may also be allowed.

Applications and Limitations

Vegetated rooftops offer a practical method of managing runoff in densely developed urban neighborhoods and can be engineered to achieve specific stormwater runoff control objectives.

Design Guidelines

- Soil or growth media must have a high field capacity.
- Soil or growth media must have a saturated hydraulic conductivity of ≥1 inch/hour.
- Drainage layer must allow free drainage under the soil/growth media.
- Vegetative cover must be both drought and wet tolerant.
- There must be a waterproof membrane between the drain layer and the structural roof support.
- The maximum slope shall be 20%.

Flow Credits for Vegetated Roofs

Where vegetated roofs are used, the impervious areas may be modeled based on the thickness of the soil media:

- For roofs with 3-8” of soil/growing media, model the roof as 50% till landscaped and 50% impervious.
- For roofs with ≥8” of soil/growing media, model the roof as 50% till pasture and 50% impervious.

Resource Material

Miller, C. and Grantley Pyke. Methodology for the Design of Vegetated Roof Covers, Proceedings of the 1999 International Water Resources Engineering Conference, Seattle, Washington.

2.2.3.3 BMP L632 Rainfall Reuse Systems

Purpose and Definition

Rainfall reuse systems are designed to collect stormwater runoff from non-pollution generating surfaces and make use of the collected water. Rainfall reuse systems are also known as rainwater harvesting systems and rainfall catchment systems.

Applications and Limitations

Highly developed areas where large buildings encompass nearly all of the area.

Approval of the water reuse system requires approval of the appropriate state and local agencies as required for any water right.

Design Guidelines

- Where captured water is solely for outdoor use, density shall be 4 homes per acre or less can be used.
- Cisterns can be incorporated into the aesthetics of the building and garden.
- If a rainwater reuse system holds more than 6 inches depth of water, it should be covered securely or have a top opening of 4 inches or less to prevent small children from gaining access to the standing water.
- Design and maintain the system to minimize clogging by leaves and other debris.

Flow Credits for Rainfall Reuse Systems

The drainage area to the rainfall reuse system does not need to be entered into the runoff model when:

- 100% of the annual average runoff volume (using WWHM) is reused, or
- Interior uses have a monthly water balance that demonstrates adequate capacity for each month and reuse of all stored water annually.

2.2.3.4 BMP L633 Alternate Paving Surfaces

Purpose and Definition

Alternate paving surfaces include porous asphalt pavement, porous concrete, grid and lattice rigid plastic or paving blocks where the holes are filled with soil, sand, or gravel; and cast-in-place paver systems. Porous surfaces are designed to accommodate pedestrian, bicycle, and auto traffic while allowing infiltration and storage of stormwater.

Alternate paving systems may be designed with an underdrain to collect stormwater or without an underdrain as an infiltration facility.

Applications and Limitations

- Appropriate application for alternative porous surfaces depend on the type of paving system, but typically include parking overflow areas, parking stalls, low volume residential roads, low-volume parking areas, alleys, driveways, sidewalks/pathways, and patios.
- Porous paving surfaces can provide some attenuation and uptake of stormwater runoff even on cemented till soils while still providing the structural integrity required for a roadway surface to support heavy loads.
- Porous paving surfaces work well in concert with other LID BMPs such as porous parking stalls adjacent to bioretention areas, and porous roadway surfaces bordered by vegetated swales.
- Although there is a drop of infiltration rates over time, the long-term infiltration rate is still substantial enough to provide significant reductions in runoff.
- Infiltration through pervious pavement surfaces shall not be allowed with land uses that generate heavy pollutant loads. The potential sediment loading for each application should be considered when determining if the application of alternate surfaces is appropriate.
- Runoff generated from lawns or other pervious surfaces shall not be directed onto porous surfaces.
- No point discharges may be directed to porous surfaces.
- Sheet flow runoff may be directed onto a porous surface provided that the length of sheet flow across the paved section is no more than twice the length of sheet flow across the porous pavement section.

Design Criteria

- Unless approved in writing by The City, maximum slopes for alternative paving surfaces are:
    - 5% for porous asphalt
    - 6% for porous concrete
    - 10% for interlocking pavers
    - 5-6% grid and lattice systems

- Follow manufacturer's recommendations for design, installation, and maintenance.
- Subgrade infiltration rates less than 2.4 inches/hour and a cation exchange capacity of 5 milliequivalents CEC/100 grams dry soil (or greater) will provide water quality treatment.
- Typical cross-sections of porous paving systems consist of:
  - A top layer with either porous asphalt, porous concrete, concrete block pavers, or a plastic grid paver filled with sand topsoil or gravel.
  - An aggregate subbase with larger rock at the bottom and smaller rock directly under the top surface.
  - For open-celled paving grids and blocks, a leveling course consisting of finer aggregate.
  - A geotextile fabric
- Both gravel and soil with vegetation can be used to fill the opening in paver and rigid grid systems. Manufacturer recommendations should be followed to apply the appropriate material.
- Porous systems that use pavers shall be confined with a rigid edge system to prevent gradual movement of the paving stones.
- Subgrade layer:
  - Compact the subgrade to the minimum necessary for structural stability. Do not allow heavy compaction. The subgrade should not be subject to truck traffic.
  - Use on soil types A through C.
- Geotextile
  - Use geotextile between subgrade and base material to keep soil out of base layer.
  - The geotextile must pass water at a greater rate than the subgrade soils.
- Separation or Bottom Filter Layer (optional but recommended)
  - A layer of sand or crushed stone graded flat is recommended to promote infiltration across the surface, stabilize the base layer, protect the underlying soil from compaction, and serve as a transition between the base course and the underlying geotextile.
- Base Material

  Material must be free draining. Below are examples of possible base material specifications. See Chapter 6 of the "Low Impact Development: Technical Guidance Manual for Puget Sound" for more detailed information.

Driveway base material:

- >4” layer of free-draining crushed rock, screened gravel, or washed sand.
- <5% fines (material passing the #200 sieve) based on fraction passing the #4 sieve.

Roads and Parking Lots

- Follow the standard material and quantities used for asphalt roads.

- Wearing Layer
  - A minimum infiltration rate of 10 inches/hour is required though higher infiltration rates are desirable.
  - For *porous asphalt*, products must have adequate void space, commonly 12-20%.
  - For *porous concrete*, products must have adequate void space, commonly 15-21%.
  - For *grid/lattice systems* filled with gravel, sand, or a soil of finer particles with or without grass, fill must be at least 2”. Fill should be underlain with 6” or more of sand or gravel to provide an adequate base. Locate fill at or slightly below the top elevation the top elevation of the grid/lattice structure. Modular grid openings must be at least 40% of the total surface area.
  - For *paving blocks*, fill spaces between blocks with 6” of free draining sand or aggregate material. Provide a minimum of 12% free draining surface area.
- Drainage Conveyance
  - Design roads with adequate drainage conveyance facilities if the road surface was impermeable.
  - Design drainage flow paths to move water safely away from the road prism and into the roadside drainage facility for roads with base courses that extend below the surrounding grade.
- Acceptance Test
  - Test all permeable surfaces by throwing a bucket of water on the surface. If anything runs off the surface or puddles, additional testing is necessary prior to accepting the construction.
  - As directed by The City, test with a 6” ring infiltrometer or sprinkle infiltrometer. Wet the road surface continuously for 10 minutes. Test to determine compliance with 10 inches/hour minimum infiltration rate.
  - For facilities designed to infiltrate, the bucket test shall be completed annually.
  - Test documentation shall be retained with maintenance records.

Maintenance

- Follow manufacturer's suggestions for maintenance.
- Inspect project upon completion to correct accumulation of fine material. Conduct periodic visual inspections to determine if surfaces are clogged.
- Sweep non-planted surfaces with a high-efficiency sweeper twice per year, one in autumn, and one in early spring. Sweeping frequency can be reduced if infiltration rate testing indicates that a rate of 10 inches/hour or greater is being maintained.
- Maintenance records shall be retained and provided to the City upon request.

Flow Credits for Alternate Paving Systems

Flow credits for alternate paving systems are based on the base material and type of alternate surface. The following lists the possible credits that can be achieved by using alternative paving systems:

For porous asphalt or concrete systems used as public road or public parking lot configurations:

Where base material is laid above surrounding grade:

- Without an underdrain, model the surface as grass over underlying soil type.
- With an underdrain either at or below the bottom of the base layer or elevated within the base course, model the surface as impervious.

Where base material is laid partially or completely below surrounding grade:

- Without an underdrain, model the surface as grass over underlying soil type or impervious surface routed to an infiltration.
- With an underdrain at or below bottom of base layer or elevated within the base course, model the surface as impervious.

For porous asphalt or concrete systems used at private facilities such as driveways, parking lots, walks, and patios:

Where the base material is laid below ground:

- Without an underdrain, model the surface as 50% grass on underlying soil and 50% impervious.
- With a pipe underdrain, model the surface as impervious.

For grid/lattice systems and paving blocks used as public road or public parking lot:

Where base material is laid above the surrounding grade:

- Without an underdrain, model grid/lattice systems as grass on underlying soil and model paving blocks as 50% grass on underlying soil with 50% impervious.
- With an underdrain, model the surface as impervious.

Where base material is laid partially or completely below surround ground:

- Without an underdrain, model grid/lattice systems as grass on underlying soil and model paving blocks as 50% grass with 50% impervious or model both grid/lattice systems and paving blocks as impervious surfaces routed to an infiltration basin.
- With an underdrain, at or below bottom of the base layer, model the surface as impervious.

With an underdrain elevated within the base course, model the surface as impervious routed to an infiltration basin.

For grid/lattice systems and paving blocks used at private facilities (driveways, parking lots, walks, patios, etc.):

Where base material is laid partially or completely below surrounding ground:

- Without an underdrain, model the surface as 50% grass and 50% impervious.
- With an underdrain, model the surface as impervious.

2.2.3.5 BMP L634 Minimal Excavation Foundations

Purpose and Definition

Minimal excavation foundation systems are those techniques that minimize disturbance to the natural soil profile within the footprint of the structure. This preserves most of the hydrologic properties of the native soil. Pin foundations are an example of a minimal excavation foundation.

Applications Limitations

- Suitable for pier and perimeter wall configurations for residential or commercial structures up to three stories high.
- Useful for elevated paths and foot-bridges in environmentally sensitive areas.
- Heavy equipment cannot be used within or immediately surrounding the building. Terracing of the foundation area may be accomplished by tracked, blading equipment not exceeding 650 psf.

Design Criteria

See Chapter 6 of "Low Impact Development: Technical Guidance Manual for Puget Sound" for design information.

Flow Credits for Minimal Excavation Foundation Systems

- Where roof runoff is dispersed on the up gradient side of a structure in accordance with the design criteria in "Downspout Dispersion", model the tributary roof area as pasture on the native soil.
- Where "step forming" is used on a slope, the square footage of roof that can be modeled as pasture must be reduced to account for lost soils. In "step forming," the building area is terraced in cuts of limited depth. This results in a series of level plateaus on which to erect the form boards.

  The following equation can be used to reduce the roof area that can be modeled as pasture.

$$A_1 - \frac{dC(.5)}{dP} \times A_1 = A_2$$

A_1 = roof area draining to up gradient side of structure
dC = depth of cuts into the soil profile
dP = permeable depth of soil (the A horizon plus an additional few inches of the B horizon where roots permeate into ample pore space of soil).
A_2 = roof area that can be modeled as pasture on the native soil

- If roof runoff is dispersed down gradient of the structure in accordance with the design criteria and guidelines "Downspout Dispersion", and there is at least 50 feet of vegetated flow path through native material or lawn/landscape area that meets the guidelines in BMP L613 of Volume 5, Chapter 5, model the tributary roof areas as landscaped area.

2.2.3.6 BMP L635 Reverse Slope Sidewalks

Definition and Purpose

Reverse slope sidewalks are sloped to drain away from the road and onto adjacent vegetated areas.

Design Criteria for Reverse Slope Sidewalks

- There must be ≥10 feet of vegetated surface downslope that is not directly connected into the storm drainage system.
- Vegetated area receiving flow from sidewalk must be native soil or meet the guidelines in BMP L613: Post-Construction Soil Quality and Depth.

Flow Credits for Reverse Slope Sidewalks

- Model the sidewalk area as landscaped area over the underlying soil type.

THIS PAGE INTENTIONALLY LEFT BLANK.

Glossary

The following terms are provided for reference and use with this manual. They shall be superseded by any other definitions for these terms adopted by ordinance, unless they are defined in a Washington State WAC or RCW, or are used and defined as part of the Minimum Requirements for all new development and redevelopment.

Term	Definition
AASHTO classification	The official classification of soil materials and soil aggregate mixtures for highway construction, used by the American Association of State Highway and Transportation Officials.
ACC	Auburn City Code.
Absorption	The penetration of a substance into or through another, such as the dissolving of a soluble gas in a liquid.
Adjacent steep slope	A slope with a gradient of 20 percent or steeper within five hundred feet of the site.
Adjustment	A variation in the application of a Minimum Requirement to a particular project. Adjustments provide equivalent environmental protection.
Adsorption	The adhesion of a substance to the surface of a solid or liquid; often used to extract pollutants by causing them to be attached to such adsorbents as activated carbon or silica gel. Hydrophobic, or water-repulsing adsorbents, are used to extract oil from waterways when oil spills occur. Heavy metals such as zinc and lead often adsorb onto sediment particles.
Aeration	The process of being supplied or impregnated with air. In waste treatment, the process used to foster biological and chemical purification. In soils, the process by which air in the soil is replenished by air from the atmosphere. In a well aerated soil, the soil air is similar in composition to the atmosphere above the soil. Poorly aerated soils usually contain a much higher percentage of carbon dioxide and a correspondingly lower percentage of oxygen.
Aerobic	Living or active only in the presence of free (dissolved or molecular) oxygen.
Aerobic bacteria	Bacteria that require the presence of free oxygen for their metabolic processes.
Aggressive plant species	Opportunistic species of inferior biological value that tend to out-compete more desirable forms and become dominant; applied to native species in this manual.
Algae	Primitive plants, many microscopic, containing chlorophyll and forming the base of the food chain in aquatic environments. Some species may create a nuisance when environmental conditions are suitable for prolific growth.
Algal bloom	Proliferation of living algae on the surface of lakes, streams or ponds; often stimulated by phosphate over-enrichment. Algal blooms reduce the oxygen available to other aquatic organisms.

Term	Definition
American Public Works Association (APWA)	The Washington State Chapter of the American Public Works Association.
Anadromous	Fish that grow to maturity in the ocean and return to rivers for spawning.
Anaerobic	Living or active in the absence of oxygen.
Anaerobic bacteria	Bacteria that do not require the presence of free or dissolved oxygen for metabolism.
Annual flood	The highest peak discharge on average which can be expected in any given year.
Antecedent moisture conditions	The degree of wetness of a watershed or within the soil at the beginning of a storm.
Anti-seep collar	A device constructed around a pipe or other conduit and placed through a dam, levee, or dike for the purpose of reducing seepage losses and piping failures.
Anti-vortex device	A facility placed at the entrance to a pipe conduit structure such as a drop inlet spillway or hood inlet spillway to prevent air from entering the structure when the pipe is flowing full.
Applicable BMPs	As used in Volume 4, applicable BMPs are those source control BMPs that are expected to be required by local governments at new development and redevelopment sites. Applicable BMPs will also be required if they are incorporated into NPDES permits, or they are included by local governments in a stormwater program for existing facilities.
Applicant	The person who has applied for a development permit or approval.
Appurtenances	Machinery, appliances, or auxiliary structures attached to a main structure, but not considered an integral part thereof, for the purpose of enabling it to function.
Aquifer	A geologic stratum containing groundwater that can be withdrawn and used for human purposes.
Arterial	A road or street primarily for through traffic. A major arterial connects an Interstate Highway to cities and counties. A minor arterial connects major arterials to collectors. A collector connects an arterial to a neighborhood. A collector is not an arterial. A local access road connects individual homes to a collector.
As-built drawings	Engineering plans which have been revised to reflect all changes to the plans which occurred during construction.
As-graded	The extent of surface conditions on completion of grading.
BSBL	See Building set back line.
Background	A description of pollutant levels arising from natural sources, and not due to human activities.
Backwater	Water upstream from an obstruction which is deeper than it would normally be without the obstruction.
Baffle	A device to check, deflect, or regulate flow.

Term	Definition
Bank full discharge	A flow condition where streamflow completely fills the stream channel up to the top of the bank. In undisturbed watersheds, the discharge conditions occur on average every 1.5 to 2 years and controls the shape and form of natural channels.
Base flood	A flood having a one percent chance of being equaled or exceeded in any given year. This is also referred to as the 100-year flood.
Base flood elevation	The water surface elevation of the base flood. It shall be referenced to the National Geodetic Vertical Datum of 1929 (NGVD).
Baseline sample	A sample collected during dry-weather flow (i.e., it does not consist of runoff from a specific precipitation event).
Basin plan	A plan that assesses, evaluates, and proposes solutions to existing and potential future impacts to the beneficial uses of, and the physical, chemical, and biological properties of waters of the state within a basin. Basins typically range in size from 1 to 50 square miles. A plan should include but not be limited to recommendations for: • Stormwater requirements for new development and redevelopment; • Capital improvement projects; • Land Use management through identification and protection of critical areas, comprehensive land use and transportation plans, zoning regulations, site development standards, and conservation areas; • Source control activities including public education and involvement, and business programs; • Other targeted stormwater programs and activities, such as maintenance, inspections and enforcement; • Monitoring; and • An implementation schedule and funding strategy. A plan that is “adopted and implemented” must have the following characteristics: • It must be adopted by legislative or regulatory action of jurisdictions with responsibilities under the plan; • Ordinances, regulations, programs, and procedures recommended by the plan should be in effect or on schedule to be in effect; and, • An implementation schedule and funding strategy that are in progress.
Bearing capacity	The maximum load that a material can support before failing.
Bedrock	The more or less solid rock in place either on or beneath the surface of the earth. It may be soft, medium, or hard and have a smooth or irregular surface.

Term	Definition
Bench	A relatively level step excavated into earth material on which fill is to be placed.
Berm	A constructed barrier of compacted earth, rock, or gravel. In a stormwater facility, a berm may serve as a vertical divider typically built up from the bottom.
Best management practice (BMP)	The schedules of activities, prohibitions of practices, maintenance procedures, and structural and/or managerial practices, that when used singly or in combination, prevent or reduce the release of pollutants and other adverse impacts to waters of Washington State.
Biochemical oxygen demand (BOD)	An indirect measure of the concentration of biologically degradable materials present in organic wastes. The amount of free oxygen utilized by aerobic organisms when allowed to attack the organic material in an aerobically maintained environment at a specified temperature (20°C) for a specific time period (5 days), and thus stated as BOD5. It is expressed in milligrams of oxygen utilized per liter of liquid waste volume (mg/l) or in milligrams of oxygen per kilogram of waste solution (mg/kg = ppm = parts per million parts). Also called biological oxygen demand.
Biodegradable	Capable of being readily broken down by biological means, especially by microbial action. Microbial action includes the combined effect of bacteria, fungus, flagellates, amoebae, ciliates, and nematodes. Degradation can be rapid or may take many years depending upon such factors as available oxygen and moisture.
Bioengineering	The combination of biological, mechanical, and ecological concepts (and methods) to control erosion and stabilize soil through the use of vegetation or in combination with construction materials.
Biofilter	A designed treatment facility using a combined soil and vegetation system for filtration, infiltration, adsorption, and biological uptake of pollutants in stormwater when runoff flows over and through. Vegetation growing in these facilities acts as both a physical filter which causes gravity settling of particulates by regulating velocity of flow, and also as a biological sink when direct uptake of dissolved pollutants occurs. The former mechanism is probably the most important in western Washington where the period of major runoff coincides with the period of lowest biological activity.
Biofiltration	The process of reducing pollutant concentrations in water by filtering the polluted water through biological materials.
Biological control	A method of controlling pest organisms by means of introduced or naturally occurring predatory organisms, sterilization, the use of inhibiting hormones, or other means, rather than by mechanical or chemical means.
Biological magnification	The increasing concentration of a substance along succeeding steps in a food chain. Also called biomagnification.
Bollard	A post (may or may not be removable) used to prevent vehicular access.

Term	Definition
Bond	A surety bond, cash deposit or escrow account, assignment of savings, irrevocable letter of credit or other means acceptable to or required by the manager to guarantee that work is completed in compliance with the project's drainage plan and in compliance with all local government requirements.
Borrow area	A source of earth fill material used in the construction of embankments or other earth fill structures.
Buffer	The zone contiguous with a sensitive area that is required for the continued maintenance, function, and structural stability of the sensitive area. The critical functions of a riparian buffer (those associated with an aquatic system) include shading, input of organic debris and coarse sediments, uptake of nutrients, stabilization of banks, interception of fine sediments, overflow during high water events, protection from disturbance by humans and domestic animals, maintenance of wildlife habitat, and room for variation of aquatic system boundaries over time due to hydrologic or climatic effects. The critical functions of terrestrial buffers include protection of slope stability, attenuation of surface water flows from stormwater runoff and precipitation, and erosion control.
Building setback line (BSBL)	A line measured parallel to a property, easement, drainage facility, or buffer boundary, that delineates the area (defined by the distance of separation) where buildings or other obstructions are prohibited (including decks, patios, outbuildings, or overhangs beyond 18 inches). Wooden or chain link fences and landscaping are allowable within a building setback line. In this manual the minimum building setback line shall be 5 feet.
Capital Improvement Project or Program (CIP)	A project prioritized and scheduled as a part of an overall construction program or, the actual construction program.
Catch basin	A chamber or well, usually built at the curb line of a street, for the admission of surface water to a sewer or subdrain, having at its base a sediment sump designed to retain grit and detritus below the point of overflow.
Catchline	The point where a severe slope intercepts a different, more gentle slope.
Catchment	Surface drainage area.
Cation Exchange Capacity (CEC)	The amount of exchangeable cations that a soil can adsorb at pH 7.0.
Certified Erosion and Sediment Control Lead (CESCL)	An individual who is knowledgeable in the principles and practices of erosion and sediment control. The CESCL must have the skills to assess: the site conditions and construction activities that could impact the quality of the stormwater; and the effectiveness of erosion and sediment control measures used to control the quality of stormwater discharges. The CESCL must have current certification through an approved erosion and sediment control training program that meets the minimum training standards established by Ecology.
Channel	A feature that conveys surface water and is open to the air.
Channel, constructed	Channels or ditches constructed (or reconstructed natural channels) to convey surface water.
Channel, natural	Streams, creeks, or swales that convey surface/groundwater and have existed long enough to establish a stable route and/or biological community.

Term	Definition
Channel stabilization	Erosion prevention and stabilization of velocity distribution in a channel using vegetation, jetties, drops, revetments, and/or other measures.
Channel storage	Water temporarily stored in channels while enroute to an outlet.
Channelization	Alteration of a stream channel by widening, deepening, straightening, cleaning, or paving certain areas to change flow characteristics.
Check dam	Small dam constructed in a gully or other small watercourse to decrease the streamflow velocity, minimize channel scour, and promote deposition of sediment.
Chemical oxygen demand (COD)	A measure of the amount of oxygen required to oxidize organic and oxidizable inorganic compounds in water. The COD test, like the BOD test, is used to determine the degree of pollution in water.
Civil engineer	A professional engineer licensed in the State of Washington in Civil Engineering.
Civil engineering	The application of the knowledge of the forces of nature, principles of mechanics and the properties of materials to the evaluation, design and construction of civil works for the beneficial uses of mankind.
Clay lens	A naturally-occurring localized area of clay which acts as an impermeable layer to runoff infiltration.
Clearing	The destruction and removal of vegetation by manual, mechanical, or chemical methods.
Closed depression	An area which is low-lying and either has no, or such a limited, surface water outlet that during storm events the area acts as a retention basin.
Cohesion	The capacity of a soil to resist shearing stress, exclusive of functional resistance.
Coliform bacteria	Microorganisms common in the intestinal tracts of man and other warm-blooded animals; all the aerobic and facultative anaerobic, gram-negative, nonspore-forming, rod-shaped bacteria which ferment lactose with gas formation within 48 hours at 35°C. Used as an indicator of bacterial pollution.
Commercial agriculture	Those activities conducted on lands defined in RCW 84.34.020(2), and activities involved in the production of crops or livestock for wholesale trade. An activity ceases to be considered commercial agriculture when the area on which it is conducted is proposed for conversion to a nonagricultural use or has lain idle for more than five (5) years, unless the idle land is registered in a federal or state soils conservation program, or unless the activity is maintenance of irrigation ditches, laterals, canals, or drainage ditches related to an existing and ongoing agricultural activity.
Commercial sites	Sites as defined in Title 18 of ACC.
Compaction	The densification, settlement, or packing of soil in such a way that permeability of the soil is reduced. Compaction effectively shifts the performance of a hydrologic group to a lower permeability hydrologic group. For example, a group B hydrologic soil can be compacted and be effectively converted to a group C hydrologic soil in the way it performs in regard to runoff. Compaction may also refer to the densification of a fill by mechanical means.

Term	Definition
Compensatory storage	New excavated storage volume equivalent to the flood storage capacity eliminated by filling or grading within the flood fringe. Equivalent shall mean that the storage removed shall be replaced by equal volume between corresponding one-foot contour intervals that are hydraulically connected to the floodway through their entire depth.
Compost	Organic residue or a mixture of organic residues and soil, that has undergone biological decomposition until it has become relatively stable humus.
Composted Mulch	Mulch prepared from decomposed organic materials that have undergone a controlled process to minimize weed seeds. Acceptable feedstocks include, but are not limited to, yard debris, wood waste, land clearing debris, brush, and branches.
Composting	A controlled process of degrading organic matter by microorganisms. Present day composting is the aerobic, hemophilic decomposing of organic waste to relatively stable humus. Composting is the process of making usable, organic matter that is beneficial to plants and has converted nutrients into slow-release forms (versus mineralized water-soluble forms found in fertilizer).
Comprehensive planning	Planning that takes into account all aspects of water, air, and land resources and their uses and limits.
Conservation district	A public organization created under state enabling law as a special-purpose district to develop and carry out a program of soil, water, and related resource conservation, use, and development within its boundaries, usually a subdivision of state government with a local governing body and always with limited authority. Often called a soil conservation district or a soil and water conservation district.
Constructed wetland	Those wetlands intentionally created on sites that are not wetlands for the primary purpose of wastewater or stormwater treatment and managed as such. Constructed wetlands are normally considered as part of the stormwater collection and treatment system.
Contour	An imaginary line on the surface of the earth connecting points of the same elevation.
Conveyance	A mechanism for transporting water from one point to another, including pipes, ditches, and channels.
Conveyance system	The drainage facilities, both natural and man-made, which collect, contain, and provide for the flow of surface and stormwater from the highest points on the land down to a receiving water. The natural elements of the conveyance system include swales and small drainage courses, streams, rivers, lakes, and wetlands. The human-made elements of the conveyance system include gutters, ditches, pipes, channels, and most retention/detention facilities.
Cover crop	A close-growing crop grown primarily for the purpose of protecting and improving soil between periods of permanent vegetation.
Created wetland	Means those wetlands intentionally created from nonwetland sites to produce or replace natural wetland habitat (e.g., compensatory mitigation projects).

Term	Definition
Critical Areas	At a minimum, areas which include wetlands, areas with a critical recharging effect on aquifers used for potable water, fish and wildlife habitat conservation areas, frequently flooded areas, geologically hazardous areas, including unstable slopes, and associated areas and ecosystems.
Critical Drainage Area	An area with such severe flooding, drainage and/or erosion/sedimentation conditions that the area has been formally adopted as a Critical Drainage Area by rule under the procedures specified in an ordinance.
Critical reach	The point in a receiving stream below a discharge point at which the lowest dissolved oxygen level is reached and stream recovery begins.
Culvert	Pipe or concrete box structure that drains open channels, swales or ditches under a roadway or embankment. Typically with no catchbasins or manholes along its length.
Cut	Portion of land surface or area from which earth has been removed or will be removed by excavating; the depth below original ground surface to excavated surface.
Cut-and-fill	Process of earth moving by excavating part of an area and using the excavated material for adjacent embankments or fill areas.
Cut slope	A slope formed by excavating overlying material to connect the original ground surface with a lower ground surface created by the excavation. A cut slope is distinguished from a bermed slope, which is constructed by importing soil to create the slope.
DNS	See Determination of Nonsignificance.
Dead storage	The volume available in a depression in the ground below any conveyance system, or surface drainage pathway, or outlet invert elevation that could allow the discharge of surface and stormwater runoff.
Dedication of land	Refers to setting aside a portion of a property for a specific use or function.
Degradation	(Biological or chemical) The breakdown of complex organic or other chemical compounds into simpler substances, usually less harmful than the original compound, as with the degradation of a persistent pesticide. (Geological) Wearing down by erosion. (Water) The lowering of the water quality of a watercourse by an increase in the pollutant loading.
Degraded (disturbed) wetland (community)	A wetland (community) in which the vegetation, soils, and/or hydrology have been adversely altered, resulting in lost or reduced functions and values; generally, implies topographic isolation; hydrologic alterations such as hydroperiod alteration (increased or decreased quantity of water), diking, channelization, and/or outlet modification; soils alterations such as presence of fill, soil removal, and/or compaction; accumulation of toxicants in the biotic or abiotic components of the wetland; and/or low plant species richness with dominance by invasive weedy species.
Denitrification	The biochemical reduction of nitrates or nitrites in the soil or organic deposits to ammonia or free nitrogen.

Term	Definition
Depression storage	The amount of precipitation that is trapped in depressions on the surface of the ground.
Design engineer	The professional civil engineer licensed in the State of Washington who prepares the analysis, design, and engineering plans for an applicant's permit or approval submittal.
Design storm	A prescribed hyetograph and total precipitation amount (for a specific duration recurrence frequency) used to estimate runoff for a hypothetical storm of interest or concern for the purposes of analyzing existing drainage, designing new drainage facilities or assessing other impacts of a proposed project on the flow of surface water. (A hyetograph is a graph of percentages of total precipitation for a series of time steps representing the total time during which the precipitation occurs.)
Detention	The release of stormwater runoff from the site at a slower rate than it is collected by the stormwater facility system, the difference being held in temporary storage.
Detention facility	An above or below ground facility, such as a pond or tank, that temporarily stores stormwater runoff and subsequently releases it at a slower rate than it is collected by the drainage facility system. There is little or no infiltration of stored stormwater.
Detention time	The theoretical time required to displace the contents of a stormwater treatment facility at a given rate of discharge (volume divided by rate of discharge).
Determination of Nonsignificance (DNS)	The written decision by the responsible official of the lead agency that a proposal is not likely to have a significant adverse environmental impact, and therefore an EIS is not required.
Development	Means new development, redevelopment, or both. See definitions for each.
Discharge	Runoff leaving a new development or redevelopment via overland flow, built conveyance systems, or infiltration facilities. A hydraulic rate of flow, specifically fluid flow; a volume of fluid passing a point per unit of time, commonly expressed as cubic feet per second, cubic meters per second, gallons per minute, gallons per day, or millions of gallons per day.
Dispersion	Release of surface and stormwater runoff from a drainage facility system such that the flow spreads over a wide area and is located so as not to allow flow to concentrate anywhere upstream of a drainage channel with erodible underlying granular soils.
Ditch	A long narrow excavation dug in the earth for drainage with its top width less than 10 feet at design flow.
Divide, Drainage	The boundary between one drainage basin and another.
Drain	A buried pipe or other conduit (closed drain). A ditch (open drain) for carrying off surplus surface water or groundwater.
(To) Drain	To provide channels, such as open ditches or closed drains, so that excess water can be removed by surface flow or by internal flow. To lose water (from the soil) by percolation.

Term	Definition
Drainage	Refers to the collection, conveyance, containment, and/or discharge of surface and stormwater runoff.
Drainage basin	A geographic and hydrologic subunit of a watershed.
Drainage channel	A drainage pathway with a well-defined bed and banks indicating frequent conveyance of surface and stormwater runoff.
Drainage course	A pathway for watershed drainage characterized by wet soil vegetation; often intermittent in flow.
Drainage easement	A legal encumbrance that is placed against a property's title to reserve specified privileges for the users and beneficiaries of the drainage facilities contained within the boundaries of the easement.
Drainage pathway	The route that surface and stormwater runoff follows downslope as it leaves any part of the site.
Drainage review	An evaluation by City development review staff of a proposed project's compliance with the drainage requirements in this manual or its technical equivalent.
Drainage, Soil	As a natural condition of the soil, soil drainage refers to the frequency and duration of periods when the soil is free of saturation; for example, in well-drained soils the water is removed readily but not rapidly; in poorly drained soils the root zone is waterlogged for long periods unless artificially drained, and the roots of ordinary crop plants cannot get enough oxygen; in excessively drained soils the water is removed so completely that most crop plants suffer from lack of water. Strictly speaking, excessively drained soils are a result of excessive runoff due to steep slopes or low available water-holding capacity due to small amounts of silt and clay in the soil material. The following classes are used to express soil drainage: • Well drained - Excess water drains away rapidly and no mottling occurs within 36 inches of the surface. • Moderately well drained - Water is removed from the soil somewhat slowly, resulting in small but significant periods of wetness. Mottling occurs between 18 and 36 inches. • Somewhat poorly drained - Water is removed from the soil slowly enough to keep it wet for significant periods but not all of the time. Mottling occurs between 8 and 18 inches. • Poorly drained - Water is removed so slowly that the soil is wet for a large part of the time. Mottling occurs between 0 and 8 inches. • Very poorly drained - Water is removed so slowly that the water table remains at or near the surface for the greater part of the time. There may also be periods of surface ponding. The soil has a black to gray surface layer with mottles up to the surface.
Drawdown	Lowering of the water surface (in open channel flow), water table or piezometric surface (in groundwater flow) resulting from a withdrawal of water.

Term	Definition
Drop-inlet spillway	Overall structure in which the water drops through a vertical riser connected to a discharge conduit.
Drop spillway	Overall structure in which the water drops over a vertical wall onto an apron at a lower elevation.
Drop structure	A structure for dropping water to a lower level and dissipating its surplus energy; a fall. A drop may be vertical or inclined.
Dry weather flow	The combination of groundwater seepage and allowed non-stormwater flows found in storm sewers during dry weather. Also that flow in streams during the dry season.
EIS	See Environmental Impact Statement.
ESC	Erosion and Sediment Control (Plan).
Earth material	Any rock, natural soil or fill and/or any combination thereof. Earth material shall not be considered topsoil used for landscape purposes. Topsoil used for landscaped purposes shall comply with ASTM D 5268 specifications. Engineered soil/landscape systems are also defined independently.
Easement	The legal right to use a parcel of land for a particular purpose. It does not include fee ownership, but may restrict the owners use of the land.
Effective Impervious Surface	Those impervious surfaces that are connected via sheet flow or discrete conveyance to a drainage system. Impervious surfaces on residential development sites are considered ineffective if the runoff is dispersed through at least one hundred feet of native vegetation in accordance with BMP L614 - “Full Dispersion,” as described in Chapter 2 of Volume 6. Impervious surfaces infiltrated according to this manual are also considered ineffective.
Embankment	A structure of earth, gravel, or similar material raised to form a pond bank or foundation for a road.
Emergent plants	Aquatic plants that are rooted in the sediment but whose leaves are at or above the water surface. These wetland plants often have high habitat value for wildlife and waterfowl, and can aid in pollutant uptake.
Emergency spillway	A vegetated earth channel used to safely convey flood discharges in excess of the capacity of the principal spillway.
Emerging technology	Treatment technologies that are currently being evaluated for performance.
Energy dissipater	Any means by which the total energy of flowing water is reduced. In stormwater design, they are usually mechanisms that reduce velocity prior to, or at, discharge from an outfall in order to prevent erosion. They include rock splash pads, drop manholes, concrete stilling basins or baffles, and check dams.
Energy gradient	The slope of the specific energy line (i.e., the sum of the potential and velocity heads).

Term	Definition
Engineered soil/ landscape system	This is a self-sustaining soil and plant system that simultaneously supports plant growth, soil microbes, water infiltration, nutrient and pollutant adsorption, sediment and pollutant biofiltration, water interflow, and pollution decomposition. The system shall be protected from compaction and erosion. The system shall be planted and/or mulched as part of the installation. The engineered soil/plant system shall have the following characteristics: • Be protected from compaction and erosion. • Have a plant system to support a sustained soil quality. • Possess permeability characteristics of not less than 6.0, 2.0, and 0.6 inches/hour for hydrologic soil groups A, B, and C, respectively (per ASTM D 3385). D is less than 0.6 inches/hour. • Possess minimum percent organic matter of 12, 14, 16, and 18 percent (dry-weight basis) for hydrologic soil groups A, B, C, and D, respectively (per ASTM D 2974).
Engineering geology	The application of geologic knowledge and principles in the investigation and evaluation of naturally occurring rock and soil for use in the design of civil works.
Engineering plan	A plan prepared and stamped by a professional civil engineer.
Enhancement	To raise value, desirability, or attractiveness of an environment associated with surface water.
Environmental Impact Statement (EIS)	A document that discusses the likely significant adverse impacts of a proposal, ways to lessen the impacts, and alternatives to the proposal. They are required by the national and state environmental policy acts when projects are determined to have significant environmental impact.
Erodible granular soils	Soil materials that are easily eroded and transported by running water, typically fine or medium grained sand with minor gravel, silt, or clay content. Such soils are commonly described as Everett or Indianola series soil types in the SCS classification. Also included are any soils showing examples of existing severe stream channel incision as indicated by unvegetated streambanks standing over two feet high above the base of the channel.

Term	Definition
Erosion	The wearing away of the land surface by running water, wind, ice, or other geological agents, including such processes as gravitational creep. Also, detachment and movement of soil or rock fragments by water, wind, ice, or gravity. The following terms are used to describe different types of water erosion: • **Accelerated erosion** - Erosion much more rapid than normal or geologic erosion, primarily as a result of the influence of the activities of man or, in some cases, of the animals or natural catastrophes that expose bare surfaces (e.g., fires). • **Geological erosion** - The normal or natural erosion caused by geological processes acting over long geologic periods and resulting in the wearing away of mountains, the building up of floodplains, coastal plains, etc. Synonymous with natural erosion. • **Gully erosion** - The erosion process whereby water accumulates in narrow channels and, over short periods, removes the soil from this narrow area to considerable depths, ranging from 1 to 2 feet to as much as 75 to 100 feet. • **Natural erosion** - Wearing away of the earth's surface by water, ice, or other natural agents under natural environmental conditions of climate, vegetation, etc., undisturbed by man. Synonymous with geological erosion. • **Normal erosion** - The gradual erosion of land used by man which does not greatly exceed natural erosion. • **Rill erosion** - An erosion process in which numerous small channels only several inches deep are formed; occurs mainly on recently disturbed and exposed soils. See Rill. • **Sheet erosion** - The removal of a fairly uniform layer of soil from the land surface by runoff. • **Splash erosion** - The spattering of small soil particles caused by the impact of raindrops on wet soils. The loosened and spattered particles may or may not be subsequently removed by surface runoff.
Erosion classes (soil survey)	A grouping of erosion conditions based on the degree of erosion or on characteristic patterns. Applied to accelerated erosion, not to normal, natural, or geological erosion. Four erosion classes are recognized for water erosion and three for wind erosion.
Erosion and sedimentation control	Any temporary or permanent measures taken to reduce erosion; control siltation and sedimentation; and ensure that sediment-laden water does not leave the site.

Term	Definition
Erosion and sediment control facility	A type of drainage facility designed to hold water for a period of time to allow sediment contained in the surface and stormwater runoff directed to the facility to settle out so as to improve the quality of the runoff.
Escarpment	A steep face or a ridge of high land.
Estuarine wetland	Generally, an eelgrass bed; salt marsh; or rocky, sandflat, or mudflat intertidal area where fresh and salt water mix. (Specifically, a tidal wetland with salinity greater than 0.5 parts per thousand, usually semi-enclosed by land but with partially obstructed or sporadic access to the open ocean).
Estuary	An area where fresh water meets salt water, or where the tide meets the river current (e.g., bays, mouths of rivers, salt marshes and lagoons). Estuaries serve as nurseries and spawning and feeding grounds for large groups of marine life and provide shelter and food for birds and wildlife.
Eutrophication	Refers to the process where nutrient over-enrichment of water leads to excessive growth of aquatic plants, especially algae.
Evapotranspiration	The collective term for the processes of evaporation and plant transpiration by which water is returned to the atmosphere.
Excavation	The mechanical removal of earth material.
Exception	Relief from the application of a Minimum Requirement to a project.
Exfiltration	The downward movement of runoff through the bottom of an infiltration BMP into the soil layer or the downward movement of water through soil.
Existing site condition	Actual land coverage of the site at the time of proposed development.
FIRM	See Flood Insurance Rate Map.
Fertilizer	Any material or mixture used to supply one or more of the essential plant nutrient elements.
Field Capacity	Amount of soil moisture or water content held in soul after excess water has drained away and the rate of downward movement has materially decreased.
Fill	A deposit of earth material placed by artificial means.
Filter fabric	A woven or non-woven, water-permeable material generally made of synthetic products such as polypropylene and used in stormwater management and erosion and sediment control applications to trap sediment or prevent the clogging of aggregates by fine soil particles.
Filter fabric fence	A temporary sediment barrier consisting of a filter fabric stretched across and attached to supporting posts and entrenched. The filter fence is constructed of stakes and synthetic filter fabric with a rigid wire fence backing where necessary for support.
Filter strip	A grassy area with gentle slopes that treats stormwater runoff from adjacent paved areas before it concentrates into a discrete channel.
Flocculation	The process by which suspended colloidal or very fine particles are assembled into larger masses or floccules which eventually settle out of suspension. This process occurs naturally but can also be caused through the use of such

Term	Definition
	chemicals as alum.
Flood	An overflow or inundation that comes from a river or any other source, including (but not limited to) streams, tides, wave action, storm drains, or excess rainfall. Any relatively high stream flow overtopping the natural or artificial banks in any reach of a stream.
Flood control	Methods or facilities for reducing flood flows and the extent of flooding.
Flood control project	A structural system installed to protect land and improvements from floods by the construction of dikes, river embankments, channels, or dams.
Flood frequency	The frequency with which the flood of interest may be expected to occur at a site in any average interval of years. Frequency analysis defines the "n-year flood" as being the flood that will, over a long period of time, be equaled or exceeded on the average once every "n" years.
Flood fringe	That portion of the floodplain outside of the floodway which is covered by floodwaters during the base flood; it is generally associated with slower moving or standing water rather than rapidly flowing water.
Flood hazard areas	Those areas subject to inundation by the base flood. Includes, but is not limited to streams, lakes, wetlands, and closed depressions.
Flood Insurance Rate Map (FIRM)	The official map on which the Federal Emergency Management Agency has delineated many areas of flood hazard, floodway, and the risk premium zones.
Flood Insurance Study	The official report provided by the Federal Emergency Management Agency that includes flood profiles and the FIRM.
Flood peak	The highest value of the stage or discharge attained by a flood; thus, peak stage or peak discharge.
Floodplain	The total area subject to inundation by a flood including the flood fringe and floodway.
Flood-proofing	Adaptations that ensure a structure is substantially impermeable to the passage of water below the flood protection elevation that resists hydrostatic and hydrodynamic loads and effects of buoyancy.
Flood protection elevation	The base flood elevation or higher as defined by the local government.
Flood protection facility	Any levee, berm, wall, enclosure, raise bank, revetment, constructed bank stabilization, or armoring, that is commonly recognized by the community as providing significant protection to a property from inundation by flood waters.
Flood routing	An analytical technique used to compute the effects of system storage dynamics on the shape and movement of flow represented by a hydrograph.
Flood stage	The stage at which overflow of the natural banks of a stream begins.
Floodway	The channel of the river or stream and those portions of the adjoining floodplains that are reasonably required to carry and discharge the base flood flow. The portions of the adjoining floodplains which are considered to be "reasonably required" is defined by flood hazard regulations.

Term	Definition
Flow control facility	A drainage facility designed to mitigate the impacts of increased surface and stormwater runoff flow rates generated by development. Flow control facilities are designed either to hold water for a considerable length of time and then release it by evaporation, plant transpiration, and/or infiltration into the ground, or to hold runoff for a short period of time, releasing it to the conveyance system at a controlled rate.
Flow duration	The aggregate time that peak flows are at or above a particular flow rate of interest. For example, the amount of time that peak flows are at or above 50% of the 2-year peak flow rate for a period of record.
Flow frequency	The inverse of the probability that the flow will be equaled or exceeded in any given year (the exceedance probability). For example, if the exceedance probability is 0.01 or 1 in 100, that flow is referred to as the 100-year flow.
Flow path	The route that stormwater runoff follows between two points of interest.
Forebay	An easily maintained, extra storage area provided near an inlet of a BMP to trap incoming sediments before they accumulate in a pond or wetland BMP.
Forest practice	Any activity conducted on or directly pertaining to forest land and relating to growing, harvesting, or processing timber, including but not limited to: • Road and trail construction. • Harvesting, final and intermediate. • Precommercial thinning. • Reforestation. • Fertilization. • Prevention and suppression of diseases and insects. • Salvage of trees. • Brush control.
Forested communities (wetlands)	In general terms, communities (wetlands) characterized by woody vegetation that is greater than or equal to 6 meters in height; in this manual the term applies to such communities (wetlands) that represent a significant amount of tree cover consisting of species that offer wildlife habitat and other values and advance the performance of wetland functions overall.
Freeboard	The vertical distance between the design water surface elevation and the elevation of the barrier that contains the water.
Frequently flooded areas	The 100-year floodplain designations of the Federal Emergency Management Agency and the National Flood Insurance Program or as defined by the local government.
Frost-heave	The upward movement of soil surface due to the expansion of water stored between particles in the first few feet of the soil profile as it freezes. May cause surface fracturing of asphalt or concrete.

Term	Definition
Frequency of storm (design storm frequency)	The anticipated period in years that will elapse, based on average probability of storms in the design region, before a storm of a given intensity and/or total volume will recur; thus a 10-year storm can be expected to occur on the average once every 10 years. Sewers designed to handle flows that occur under such storm conditions would be expected to be surcharged by any storms of greater amount or intensity
Functions	The ecological (physical, chemical, and biological) processes or attributes of a wetland without regard for their importance to society (see also values). Wetland functions include food chain support, provision of ecosystem diversity and fish and wildlife habitat, floodflow alteration, groundwater recharge and discharge, water quality improvement, and soil stabilization.
Gabion	A rectangular or cylindrical wire mesh cage (a chicken wire basket) filled with rock and used as a protecting agent, revetment, etc., against erosion. Soft gabions, often used in streambank stabilization, are made of geotextiles filled with dirt, in between which cuttings are placed.
Gage or gauge	A device for registering precipitation, water level, discharge, velocity, pressure, temperature, etc. Also, a measure of the thickness of metal; e.g., diameter of wire, wall thickness of steel pipe.
Gauging station	A selected section of a stream channel equipped with a gauge, recorder, or other facilities for determining stream discharge.
Geologist	A person who has earned a degree in geology from an accredited college or university or who has equivalent educational training and has at least five years of experience as a practicing geologist or four years of experience and at least two years post-graduate study, research or teaching. The practical experience shall include at least three years work in applied geology and landslide evaluation, in close association with qualified practicing geologists or geotechnical professional/civil engineers.
Geologically hazardous areas	Areas that, because of their susceptibility to erosion, sliding, earthquake, or other geological events, are not suited to the siting of commercial, residential, or industrial development consistent with public health or safety concerns.
Geometrics	The mathematical relationships between points, lines, angles, and surfaces used to measure and identify areas of land.
Geotechnical professional civil engineer	A practicing, geotechnical/civil engineer licensed as a professional Civil Engineer with the State of Washington who has at least four years of professional employment as a geotechnical engineer in responsible charge, including experience with landslide evaluation.
Grade	The slope of a road, channel, or natural ground. The finished surface of a canal bed, roadbed, top of embankment, or bottom of excavation; any surface prepared for the support of construction such as paving or the laying of a conduit.
(To) Grade	To finish the surface of a canal bed, roadbed, top of embankment or bottom of excavation.

Term	Definition
Gradient terrace	An earth embankment or a ridge-and-channel constructed with suitable spacing and an acceptable grade to reduce erosion damage by intercepting surface runoff and conducting it to a stable outlet at a stable nonerosive velocity.
Grassed waterway	A natural or constructed waterway, usually broad and shallow, covered with erosion-resistant grasses, used to conduct surface water from an area at a reduced flow rate. See also biofilter.
Groundwater	Water in a saturated zone or stratum beneath the land surface or a surface waterbody.
Groundwater recharge	Inflow to a groundwater reservoir.
Groundwater table	The free surface of the groundwater, that surface subject to atmospheric pressure under the ground, generally rising and falling with the season, the rate of withdrawal, the rate of restoration, and other conditions. It is seldom static.
Gully	A channel caused by the concentrated flow of surface and stormwater runoff over unprotected erodible land.
Habitat	The specific area or environment in which a particular type of plant or animal lives. An organism's habitat must provide all of the basic requirements for life and should be protected from harmful biological, chemical, and physical alterations.
Hardpan	A cemented or compacted and often clay-like layer of soil that is impenetrable by roots. Also known as glacial till.
Harmful pollutant	A substance that has adverse effects to an organism including immediate death, impaired reproduction, cancer or other effects.
Head (hydraulics)	The height of water above any plane of reference. The energy, either kinetic or potential, possessed by each unit weight of a liquid, expressed as the vertical height through which a unit weight would have to fall to release the average energy possessed. Used in various compound terms such as pressure head, velocity head, and head loss.
Head loss	Energy loss due to friction, eddies, changes in velocity, or direction of flow.
Heavy metals	Metals of high specific gravity, present in municipal and industrial wastes, that pose long-term environmental hazards. Such metals include cadmium, chromium, cobalt, copper, lead, mercury, nickel, and zinc.

Term	Definition
High-use site	High-use sites are those that typically generate high concentrations of oil due to high traffic turnover or the frequent transfer of oil. High-use sites include: • An area of a commercial or industrial site subject to an expected average daily traffic (ADT) count equal to or greater than 100 vehicles per 1,000 square feet of gross building area; • An area of a commercial or industrial site subject to petroleum storage and transfer in excess of 1,500 gallons per year, not including routinely delivered heating oil; • An area of a commercial or industrial site subject to parking, storage or maintenance of 25 or more vehicles that are over 10 tons gross weight (trucks, buses, trains, heavy equipment, etc.); • A road intersection with a measured ADT count of 25,000 vehicles or more on the main roadway and 15,000 vehicles or more on any intersecting roadway, excluding projects proposing primarily pedestrian or bicycle use.
Highway	A main public road connecting towns and cities.
Hog fuel	See wood-based mulch.
Horton overland flow	A runoff process whereby the rainfall rate exceeds the infiltration rate, so that the precipitation that does not infiltrate flows downhill over the soil surface.
HSPF	**Hydrological Simulation Program-Fortran.** A continuous simulation hydrologic model that transforms an uninterrupted rainfall record into a concurrent series of runoff or flow data by means of a set of mathematical algorithms which represent the rainfall-runoff process at some conceptual level.
Humus	Organic matter in or on a soil, composed of partly or fully decomposed bits of plant tissue or from animal manure.
Hydraulic Conductivity	The quality of saturated soil that enables water or air to move through it. Also known as permeability coefficient.
Hydraulic gradient	Slope of the potential head relative to a fixed datum.
Hydrodynamics	The dynamic energy, force, or motion of fluids as affected by the physical forces acting upon those fluids.
Hydrograph	A graph of runoff rate, inflow rate or discharge rate, past a specific point over time.
Hydrologic cycle	The circuit of water movement from the atmosphere to the earth and return to the atmosphere through various stages or processes as precipitation, interception, runoff, infiltration, percolation, storage, evaporation, and transpiration.

Term	Definition
Hydrologic Soil Groups	A soil characteristic classification system defined by the U.S. Soil Conservation Service in which a soil may be categorized into one of four soil groups (A, B, C, or D) based upon infiltration rate and other properties. **Type A:** Low runoff potential. Soils having high infiltration rates, even when thoroughly wetted, and consisting chiefly of deep, well drained to excessively drained sands or gravels. These soils have a high rate of water transmission. **Type B:** Moderately low runoff potential. Soils having moderate infiltration rates when thoroughly wetted, and consisting chiefly of moderately fine to moderately coarse textures. These soils have a moderate rate of water transmission. **Type C:** Moderately high runoff potential. Soils having slow infiltration rates when thoroughly wetted, and consisting chiefly of soils with a layer that impedes downward movement of water, or soils with moderately fine to fine textures. These soils have a slow rate of water transmission. **Type D:** High runoff potential. Soils having very slow infiltration rates when thoroughly wetted, and consisting chiefly of clay soils with a high swelling potential, soils with a permanent high water table, soils with a hardpan, till, or clay layer at or near the surface, soils with a compacted subgrade at or near the surface, and shallow soils or nearly impervious material. These soils have a very slow rate of water transmission.[1] [1] Vladimir Novotny and Harvey Olem. *Water Quality Prevention, Identification, and Management of Diffuse Pollution,* Van Nostrand Reinhold: New York, 1994, p. 109.
Hydrology	The science of the behavior of water in the atmosphere, on the surface of the earth, and underground.
Hydroperiod	A seasonal occurrence of flooding and/or soil saturation; it encompasses depth, frequency, duration, and seasonal pattern of inundation.
Hyetograph	A graph of percentages of total precipitation for a series of time steps representing the total time in which precipitation occurs.
Illicit discharge	All non-stormwater discharges to stormwater drainage systems that cause or contribute to a violation of state water quality, sediment quality or groundwater quality standards, including but not limited to sanitary sewer connections, industrial process water, interior floor drains, car washing, and greywater systems.
Impact basin	A device used to dissipate the energy of flowing water. Generally constructed of concrete in the form of a partially depressed or partially submerged vessel, it may utilize baffles to dissipate velocities.
Impervious	Not allowing penetration.

Term	Definition
Impervious surface	A hard surface area which either prevents or retards the entry of water into the soil mantle as under natural conditions prior to development. A hard surface area which causes water to run off the surface in greater quantities or at an increased rate of flow from the flow present under natural conditions prior to development. Common impervious surfaces include, but are not limited to, rooftops, walkways, patios, driveways, parking lots or storage areas, concrete or asphalt paving, gravel roads, oil mat roads, packed earthen materials, and oiled, macadam or other surfaces which similarly impede the natural infiltration of stormwater. Open, uncovered retention/detention facilities shall not be considered as impervious surfaces for the purposes of determining whether the thresholds for application of minimum requirements are exceeded. Open, uncovered retention/detention facilities shall be considered impervious surfaces for purposes of runoff modeling.
Impoundment	A natural or man-made containment for surface water.
Improvement	Streets (with or without curbs or gutters), sidewalks, crosswalks, parking lots, water mains, sanitary and storm sewers, drainage facilities, street trees and other appropriate items.
Industrial activities	Material handling, transportation, or storage; manufacturing; maintenance; treatment; or disposal. Areas with industrial activities include plant yards, access roads and rail lines used by carriers of raw materials, manufactured products, waste material, or by-products; material handling sites; refuse sites; sites used for the application or disposal of process waste waters; sites used for the storage and maintenance of material handling equipment; sites used for residual treatment, storage, or disposal; shipping and receiving areas; manufacturing buildings; storage areas for raw materials, and intermediate and finished products; and areas where industrial activity has taken place in the past and significant materials remain and are exposed to stormwater.
Industrial sites	Those sites required to obtain the National Pollutant Discharge Elimination System (NPDES) Industrial Stormwater General Permit coverage in accordance with 40 CFR 122.26. These sites include industrial areas that manufacture, process, or store raw materials.
Infiltration	Means the downward movement of water from the surface to the subsoil.
Infiltration facility (or system)	A drainage facility designed to use the hydrologic process of surface and stormwater runoff soaking into the ground, commonly referred to as a percolation, to dispose of surface and stormwater runoff.
Infiltration rate	The rate, usually expressed in inches/hour, at which water moves downward (percolates) through the soil profile. Short-term infiltration rates may be inferred from soil analysis or texture or derived from field measurements. Long-term infiltration rates are affected by variability in soils and subsurface conditions at the site, the effectiveness of pretreatment or influent control, and the degree of long-term maintenance of the infiltration facility.
Ingress/egress	The points of access to and from a property.
Inlet	A form of connection between surface of the ground and a drain or sewer for the admission of surface and stormwater runoff.

Term	Definition
Insecticide	A substance, usually chemical, that is used to kill insects.
Interception (Hydraulics)	The process by which precipitation is caught and held by foliage, twigs, and branches of trees, shrubs, and other vegetation. Often used for "interception loss" or the amount of water evaporated from the precipitation intercepted.
Interflow	That portion of rainfall that infiltrates into the soil and moves laterally through the upper soil horizons until intercepted by a stream channel or until it returns to the surface for example, in a roadside ditch, wetland, spring or seep. Interflow is a function of the soil system depth, permeability, and water-holding capacity.
Intermittent stream	A stream or portion of a stream that flows only in direct response to precipitation. It receives little or no water from springs and no long-continued supply from melting snow or other sources. It is dry for a large part of the year, ordinarily more than three months.
Invasive weedy plant species	Opportunistic species of inferior biological value that tend to out-compete more desirable forms and become dominant; applied to non-native species in this manual.
Invert	The lowest point on the inside of a sewer or other conduit.
Invert elevation	The vertical elevation of a pipe or orifice in a pond that defines the water level.
Isopluvial map	A map with lines representing constant depth of total precipitation for a given return frequency.
Lag time	The interval between the center of mass of the storm precipitation and the peak flow of the resultant runoff.
Lake	An area permanently inundated by water in excess of two meters deep and greater than 20 acres in size as measured at the ordinary high water marks.
Land disturbing activity	Any activity that results in a movement of earth or a change in the existing soil cover (both vegetative and non-vegetative) and/or the existing soil topography. Land disturbing activities include, but are not limited to clearing, grading, filling, and excavation. Compaction that is associated with stabilization of structures and road construction shall also be considered a land disturbing activity. Vegetation maintenance practices are not considered land-disturbing activity.
Landslide	Episodic downslope movement of a mass of soil or rock that includes but is not limited to rockfalls, slumps, mudflows, and earthflows. For the purpose of these rules, snow avalanches are considered to be a special case of landsliding.
Landslide hazard areas	Those areas subject to a severe risk of landslide.
Leachable materials	Those substances that, when exposed to rainfall, measurably alter the physical or chemical characteristics of the rainfall runoff. Examples include erodible soils, uncovered process wastes, manure, fertilizers, oil substances, ashes, kiln dust, and garbage dumpster leakage.
Leachate	Liquid that has percolated through soil and contains substances in solution or suspension.
Leaching	Removal of the more soluble materials from the soil by percolating waters.

Term	Definition
Legume	A member of the legume or pulse family, Leguminosae, one of the most important and widely distributed plant families. The fruit is a "legume" or pod. Includes many valuable food and forage species, such as peas, beans, clovers, alfalfas, sweet clovers, and vetches. Practically all legumes are nitrogen-fixing plants.
Level pool routing	The basic technique of storage routing used for sizing and analyzing detention storage and determining water levels for ponding water bodies. The level pool routing technique is based on the continuity equation: Inflow – Outflow = Change in storage.
Level spreader	A temporary ESC device used to spread out stormwater runoff uniformly over the ground surface as sheet flow (i.e., not through channels). The purpose of level spreaders is to prevent concentrated, erosive flows from occurring, and to enhance infiltration.
LID	See Low impact development.
Local government	Any county, city, town, or special purpose district having its own incorporated government for local affairs.
Low flow channel	An incised or paved channel from inlet to outlet in a dry basin which is designed to carry low runoff flows and/or baseflow, directly to the outlet without detention.
Low impact development	A stormwater management strategy that emphasizes conservation and the use of existing natural site features integrated with engineered, small-scale stormwater controls to more closely mimic predevelopment hydrologic conditions.
Low permeable liner	A layer of compacted till or clay, or a geomembrane.
Lowest floor	The lowest enclosed area (including basement) of a structure. An area used solely for parking of vehicles, building access, or storage, in an area other than a basement area, is not considered a building's lowest floor, provided that the enclosed area meets all of the structural requirements of the flood hazard standards.
MDNS	A Mitigated Determination of Nonsignificance (See DNS and Mitigation).
Maintenance	Repair and maintenance includes activities conducted on currently serviceable structures, facilities, and equipment that involves no expansion or use beyond that previously existing and resulting in no significant adverse hydrologic impact. It includes those usual activities taken to prevent a decline, lapse, or cessation in the use of structures and systems and includes replacement of dysfunctioning facilities, including cases where environmental permits require replacing an existing structure with a different type structure, as long as the functioning characteristics of the original structure are not changed. For example, replacing a collapsed, fish blocking, round culvert with a new box culvert under the same span, or width, of roadway. For further details on the application of this manual to various road management functions, please see Volume 1, Section 3.2.1.

Term	Definition
Manning's equation	An equation used to predict the velocity of water flow in an open channel or pipelines: $V = \frac{1.486R^{2/3}S^{1/2}}{n}$ where: V is the mean velocity of flow in feet per second R is the hydraulic radius in feet S is the slope of the energy gradient or, for assumed uniform flow, the slope of the channel in feet per foot; and n is Manning's roughness coefficient or retardance factor of the channel lining.
Mass wasting	The movement of large volumes of earth material downslope.
Master drainage plan	A comprehensive drainage control plan intended to prevent significant adverse impacts to the natural and manmade drainage system, both on and off-site.
Mean annual water level fluctuation	Derived as follows: (1) Measure the maximum water level (e.g., with a crest stage gage, Reinelt and Horner 1990) and the existing water level at the time of the site visit (e.g., with a staff gage) on at least eight occasions spread through a year. (2) Take the difference of the maximum and existing water level on each occasion and divide by the number of occasions.
Mean depth	Average depth; cross-sectional area of a stream or channel divided by its surface or top width.
Mean velocity	The average velocity of a stream flowing in a channel or conduit at a given cross-section or in a given reach. It is equal to the discharge divided by the cross-sectional area of the reach.
Measuring weir	A shaped notch through which water flows are measured. Common shapes are rectangular, trapezoidal, and triangular.
Mechanical analysis	The analytical procedure by which soil particles are separated to determine the particle size distribution.
Mechanical practices	Soil and water conservation practices that primarily change the surface of the land or that store, convey, regulate, or dispose of runoff water without excessive erosion.
Metals	Elements, such as mercury, lead, nickel, zinc and cadmium, which are of environmental concern because they do not degrade over time. Although many are necessary nutrients, they are sometimes magnified in the food chain, and they can be toxic to life in high enough concentrations. They are also referred to as heavy metals.

Term	Definition
Microbes	The lower trophic levels of the soil food web. They are normally considered to include bacteria, fungi, flagellates, amoebae, ciliates, and nematodes. These in turn support the higher trophic levels, such as mites and earthworms. Together they are the basic life forms that are necessary for plant growth. Soil microbes also function to bioremediate pollutants such as petroleum, nutrients, and pathogens.
Mitigation	To lessen known impacts to the environment. Mitigation should be conducted in the following order of preference: (1) Avoiding the impact altogether by not taking a certain action or part of an action; (2) Minimizing impacts by limiting the degree or magnitude of the action and its implementation, by using appropriate technology, or by taking affirmative steps to avoid or reduce impacts; (3) Rectifying the impact by repairing, rehabilitating or restoring the affected environment; (4) Reducing or eliminating the impact over time by preservation and maintenance operations during the life of the action; and (5) Compensating for the impact by replacing, enhancing, or providing substitute resources or environments.
Modification, modified (wetland)	A wetland whose physical, hydrological, or water quality characteristics have been purposefully altered for a management purpose, such as by dredging, filling, forebay construction, and inlet or outlet control.
Monitor	To systematically and repeatedly measure something in order to track changes.
Monitoring	The collection of data by various methods for the purposes of understanding natural systems and features, evaluating the impacts of development proposals on such systems, and assessing the performance of mitigation measures imposed as conditions of development.
Multifamily sites	Sites defined as multifamily in ACC Title 18.
NGPE	See Native Growth Protection Easement.
NGVD	National Geodetic Vertical Datum.
NPDES	The National Pollutant Discharge Elimination System as established by the Federal Clean Water Act.
National Pollutant Discharge Elimination System (NPDES)	The part of the federal Clean Water Act, which requires point source dischargers to obtain permits. These permits are referred to as NPDES permits and, in Washington State, are administered by the Washington State Department of Ecology
Native Growth Protection Easement (NGPE)	An easement granted for the protection of native vegetation within a sensitive area or its associated buffer. The NGPE shall be recorded on the appropriate documents of title and filed with the County Records Division.

Term	Definition
Native vegetation	Vegetation comprised of plant species, other than noxious weeds, that are indigenous to the coastal region of the Pacific Northwest and which reasonably could have been expected to naturally occur on the site. Examples include trees such as Douglas fir, Western Hemlock, Western Red Cedar, Alder, Big-leaf Maple, and Vine Maple; shrubs such as willow, elderberry, salmonberry and salal; and herbaceous plants such as sword fern, foam flower, and fireweed.
Natural location	Means the location of those channels, swales, and other non-manmade conveyance systems as defined by the first documented topographic contours existing for the subject property, either from maps or photographs, or such other means as appropriate. In the case of outwash soils with relatively flat terrain, no natural location of surface discharge may exist.
New development	Land disturbing activities, including Class IV -general forest practices that are conversions from timber land to other uses; structural development, including construction or installation of a building or other structure; creation of impervious surfaces; and subdivision, short subdivision and binding site plans, as defined and applied in Chapter 58.17 RCW. Projects meeting the definition of redevelopment shall not be considered new development.
Nitrate (NO_3)	A form of nitrogen which is an essential nutrient to plants. It can cause algal blooms in water if all other nutrients are present in sufficient quantities. It is a product of bacterial oxidation of other forms of nitrogen, from the atmosphere during electrical storms and from fertilizer manufacturing.
Nitrification	The biochemical oxidation process by which ammonia is changed first to nitrites and then to nitrates by bacterial action, consuming oxygen in the water.
Nitrogen, Available	Usually ammonium, nitrite, and nitrate ions, and certain simple amines available for plant growth. A small fraction of organic or total nitrogen in the soil is available at any time.
Nonpoint source pollution	Pollution that enters a waterbody from diffuse origins on the watershed and does not result from discernible, confined, or discrete conveyances.
Normal depth	The depth of uniform flow. This is a unique depth of flow for any combination of channel characteristics and flow conditions. Normal depth is calculated using Manning's Equation.
NRCS Method	See SCS Method.
Nutrients	Essential chemicals needed by plants or animals for growth. Excessive amounts of nutrients can lead to degradation of water quality and algal blooms. Some nutrients can be toxic at high concentrations.
Off-line facilities	Water quality treatment facilities to which stormwater runoff is restricted to some maximum flow rate or volume by a flow-splitter.
Offsite drainage	Any area lying upstream of the site that drains onto the site and any area lying downstream of the site to which the site drains.
Off-system storage	Facilities for holding or retaining excess flows over and above the carrying capacity of the stormwater conveyance system, in chambers, tanks, lagoons, ponds, or other basins that are not a part of the subsurface sewer system.

Term	Definition
Oil/water separator	A vault, usually underground, designed to provide a quiescent environment to separate oil from water.
On-line facilities	Water quality treatment facilities which receive all of the stormwater runoff from a drainage area. Flows above the water quality design flow rate or volume are passed through at a lower percent removal efficiency.
On-site drainage	Drainage originating within the site.
On-site Stormwater Management BMPs	Site development techniques that serve to infiltrate, disperse, and retain stormwater runoff on-site.
Operational BMPs	Operational BMPs are a type of Source Control BMP. They are schedules of activities, prohibition of practices, and other managerial practices to prevent or reduce pollutants from entering stormwater. Operational BMPs include formation of a pollution prevention team, good housekeeping, preventive maintenance procedures, spill prevention and clean-up, employee training, inspections of pollutant sources and BMPs, and record keeping. They can also include process changes, raw material/product changes, and recycling wastes.
Ordinary high water mark	The term ordinary high water mark means the line on the shore established by the fluctuations of water and indicated by physical characteristics such as a clear, natural line impressed on the bank; shelving; changes in the character of soil destruction on terrestrial vegetation, or the presence of litter and debris; or other appropriate means that consider the characteristics of the surrounding area. The ordinary high water mark will be found by examining the bed and banks of a stream and ascertaining where the presence and action of waters are so common and usual, and so long maintained in all ordinary years, as to mark upon the soil a character distinct from that of the abutting upland, in respect to vegetation. In any area where the ordinary high water mark cannot be found, the line of mean high water shall substitute. In any area where neither can be found, the channel bank shall be substituted. In braided channels and alluvial fans, the ordinary high water mark or substitute shall be measured so as to include the entire stream feature.
Organic matter	Organic matter as decomposed animal or vegetable matter. It is measured by ASTM D 2974. Organic matter is an important reservoir of carbon and a dynamic component of soil and the carbon cycle. It improves soil and plant efficiency by improving soil physical properties including drainage, aeration, and other structural characteristics. It contains the nutrients, microbes, and higher-form soil food web organisms necessary for plant growth. The maturity of organic matter is a measure of its beneficial properties. Raw organic matter can release water-soluble nutrients (similar to chemical fertilizer). Beneficial organic matter has undergone a humification process either naturally in the environment or through a composting process.
Orifice	An opening with closed perimeter, usually sharp-edged, and of regular form in a plate, wall, or partition through which water may flow, generally used for the purpose of measurement or control of water.
Outlet	Point of water disposal from a stream, river, lake, tidewater, or artificial drain.

Term	Definition
Outlet channel	A waterway constructed or altered primarily to carry water from man-made structures, such as terraces, tile lines, and diversions.
Outwash soils	Soils formed from highly permeable sands and gravels.
Overflow	A device that allows the portion of flow above which can be handled to discharge downstream.
Overflow rate	Detention basin release rate divided by the surface area of the basin. It can be thought of as an average flow rate through the basin.
Overtopping	To flow over the limits of a containment or conveyance element.
Particle Size	The effective diameter of a particle as measured by sedimentation, sieving, or micrometric methods.
Peak discharge	The maximum instantaneous rate of flow during a storm, usually in reference to a specific design storm event.
Peak-shaving	Controlling post-development peak discharge rates to pre-development levels by providing temporary detention in a BMP.
Percolation	The movement of water through soil.
Percolation rate	The rate, often expressed in minutes/inch, at which clear water, maintained at a relatively constant depth, will seep out of a standardized test hole that has been previously saturated. The term percolation rate is often used synonymously with infiltration rate (short-term infiltration rate).
Permanent Stormwater Control (PSC) Plan	A plan which includes permanent BMPs for the control of pollution from stormwater runoff after construction and/or land disturbing activity has been completed.
Permeable soils	Soil materials with a sufficiently rapid infiltration rate so as to greatly reduce or eliminate surface and stormwater runoff. These soils are generally classified as SCS hydrologic soil types A and B.
Person	Any individual, partnership, corporation, association, organization, cooperative, public or municipal corporation, agency of the state, or local government unit, however designated.
Perviousness	Related to the size and continuity of void spaces in soils; related to a soil's infiltration rate.
Pesticide	A general term used to describe any substance - usually chemical - used to destroy or control organisms; includes herbicides, insecticides, algicides, fungicides, and others. Many of these substances are manufactured and are not naturally found in the environment. Others, such as pyrethrum, are natural toxins that are extracted from plants and animals.
pH	A measure of the alkalinity or acidity of a substance which is conducted by measuring the concentration of hydrogen ions in the substance. A pH of 7.0 indicates neutral water. A 6.5 reading is slightly acid.
Physiographic	Characteristics of the natural physical environment (including hills).

Term	Definition
Plan Approval Authority	The Plan Approval Authority is defined as that department within a local government that has been delegated authority to approve stormwater site plans.
Planned unit development (PUD)	A special classification authorized in some zoning ordinances, where a unit of land under control of a single developer may be used for a variety of uses and densities, subject to review and approval by the local governing body. The locations of the zones are usually decided on a case-by-case basis.
Plat	A map or representation of a subdivision showing the division of a tract or parcel of land into lots, blocks, streets, or other divisions and dedications.
Plunge pool	A device used to dissipate the energy of flowing water that may be constructed or made by the action of flowing. These facilities may be protected by various lining materials.
Point discharge	The release of collected and/or concentrated surface and stormwater runoff from a pipe, culvert, or channel.
Point of compliance	The location at which compliance with a discharge performance standard or a receiving water quality standard is measured.
Pollution	Contamination or other alteration of the physical, chemical, or biological properties, of waters of the state, including change in temperature, taste, color, turbidity, or odor of the waters, or such discharge of any liquid, gaseous, solid, radioactive or other substance into any waters of the state as will or is likely to create a nuisance or render such waters harmful, detrimental or injurious to the public health, safety or welfare, or to domestic, commercial, industrial, agricultural, recreational, or other legitimate beneficial uses, or to livestock, wild animals, birds, fish or other aquatic life.
Pollution-generating impervious surface (PGIS)	Those impervious surfaces considered to be a significant source of pollutants in stormwater runoff. Such surfaces include those which are subject to: vehicular use; industrial activities (as further defined in this glossary); or storage of erodible or leachable materials, wastes, or chemicals, and which receive direct rainfall or the run-on or blow-in of rainfall. Erodible or leachable materials, wastes, or chemicals are those substances which, when exposed to rainfall, measurably alter the physical or chemical characteristics of the rainfall runoff. Examples include erodible soils that are stockpiled, uncovered process wastes, manure, fertilizers, oily substances, ashes, kiln dust, and garbage dumpster leakage. Metal roofs are also considered to be PGIS unless they are coated with an inert, non-leachable material (e.g., baked-on enamel coating). A surface, whether paved or not, shall be considered subject to vehicular use if it is regularly used by motor vehicles. The following are considered regularly-used surfaces: roads, non-vegetated road shoulders, bike lanes within the traveled lane of a roadway, driveways, parking lots, unfenced fire lanes, vehicular equipment storage yards, and airport runways. The following are not considered regularly-used surfaces: paved bicycle pathways separated from and not subject to drainage from roads for motor vehicles, fenced fire lanes, and infrequently used maintenance access roads.

Term	Definition
Pollution-generating pervious surface (PGPS)	Any non-impervious surface subject to use of pesticides and fertilizers or loss of soil. Typical PGPS include lawns, landscaped areas, golf courses, parks, cemeteries, and sports fields
Predeveloped Condition	The native vegetation and soils that existed at a site prior to the influence of Euro-American settlement. The pre-developed condition shall be assumed to be forested land cover unless reasonable, historic information is provided that indicates the site was prairie prior to settlement.
Prediction	For the purposes of this document an expected outcome based on the results of hydrologic modeling and/or the judgment of a trained professional civil engineer or geologist.
Pretreatment	The removal of material such as solids, grit, grease, and scum from flows prior to physical, biological, or physical treatment processes to improve treatability. Pretreatment may include screening, grit removal, settling, oil/water separation, or application of a Basic Treatment BMP prior to infiltration.
Priority peat systems	Unique, irreplaceable fens that can exhibit water pH in a wide range from highly acidic to alkaline, including fens typified by Sphagnum species, Ledum groenlandicum (Labrador tea), Drosera rotundifolia (sundew), and Vaccinium oxycoccos (bog cranberry); marl fens; estuarine peat deposits; and other moss peat systems with relatively diverse, undisturbed flora and fauna. Bog is the common name for peat systems having the Sphagnum association described, but this term applies strictly only to systems that receive water income from precipitation exclusively.
Professional civil engineer	A person registered with the state of Washington as a professional engineer in civil engineering.
Project	Any proposed action to alter or develop a site. The proposed action of a permit application or an approval, which requires drainage review.
Project site	That portion of a property, properties, or right of way subject to land disturbing activities, new impervious surfaces, or replaced impervious surfaces. On-site and associated off-site improvements shall be added together when determining if a project site exceeds a threshold. The City shall make the final determination of the project site.
Properly Functioning Soil System (PFSS)	Equivalent to engineered soil/landscape system. This can also be a natural system that has not been disturbed or modified.
Puget Sound basin	Puget Sound south of Admiralty Inlet (including Hood Canal and Saratoga Passage); the waters north to the Canadian border, including portions of the Strait of Georgia; the Strait of Juan de Fuca south of the Canadian border; and all the lands draining into these waters as mapped in Water Resources Inventory Areas numbers 1 through 19, set forth in WAC 173-500-040.
R/D	See retention/detention facility.
Rare, threatened, or endangered species	Plant or animal species that are regional relatively uncommon, are nearing endangered status, or whose existence is in immediate jeopardy and is usually restricted to highly specific habitats. Threatened and endangered species are officially listed by federal and state authorities, whereas rare species are unofficial species of concern that fit the above definitions.

Term	Definition
Rational method	A means of computing storm drainage flow rates (Q) by use of the formula Q = CIA, where C is a coefficient describing the physical drainage area, I is the rainfall intensity and A is the area.
Reach	A length of channel with uniform characteristics.
Receiving waters	Bodies of water or surface water systems to which surface runoff is discharged via a point source of stormwater or via sheet flow.
Recharge	The addition of water to the zone of saturation (i.e., an aquifer).
Recommended BMPs	As used in Volume 4, recommended BMPs are those BMPs that are not expected to be mandatory by local governments at new development and redevelopment sites. However, they may improve pollutant control efficiency, and may provide a more comprehensive and environmentally effective stormwater management program.
Redevelopment	On a site that is already substantially developed (i.e., has 35% or more of existing impervious surface coverage), the creation or addition of impervious surfaces; the expansion of a building footprint or addition or replacement of a structure; structural development including construction, installation or expansion of a building or other structure; replacement of impervious surface that is not part of a routine maintenance activity; and land disturbing activities.
Regional	An action (here, for stormwater management purposes) that involves more than one discrete property.
Regional detention facility	A stormwater quantity control structure designed to correct existing surface water runoff problems of a basin or sub-basin. The area downstream has been previously identified as having existing or predicted significant and regional flooding and/or erosion problems. This term is also used when a detention facility is sited to detain stormwater runoff from a number of new developments or areas within a catchment.
Release rate	The computed peak rate of surface and stormwater runoff from a site.
Removed impervious surface	Areas where the impervious surface covering (i.e. building, pavement, gravel, etc.) has been removed, the soil has been amended in accordance with the BMP L613 (Volume 6, Section 2.2.1.4) and the area is left as a permanent pervious surface (landscaping, natural areas) and planted with native vegetation including evergreen trees. Removed impervious surfaces are not required to be added to the impervious area totals to determine compliance with Minimum Requirements #6 and #7.
Replaced impervious surface	For structures, the removal and replacement of any exterior impervious surfaces or foundation. For other impervious surfaces, the removal down to bare soil or base course and replacement.
Residential density	The number of dwelling units per unit of surface area. Net density includes only occupied land. Gross density includes unoccupied portions of residential areas, such as roads and open space.

Term	Definition
Restoration	Actions performed to reestablish wetland functional characteristics and processes that have been lost by alterations, activities, or catastrophic events in an area that no longer meets the definition of a wetland
Retention	The process of collecting and holding surface and stormwater runoff with no surface outflow.
Retention/detention facility (R/D)	A type of drainage facility designed either to hold water for a considerable length of time and then release it by evaporation, plant transpiration, and/or infiltration into the ground; or to hold surface and stormwater runoff for a short period of time and then release it to the surface and stormwater management system.
Retrofitting	The renovation of an existing structure or facility to meet changed conditions or to improve performance.
Return frequency	A statistical term for the average time of expected interval that an event of some kind will equal or exceed given conditions (e.g., a stormwater flow that occurs every 2 years)
Rhizome	A modified plant stem that grows horizontally underground.
Riffles	Fast sections of a stream where shallow water races over stones and gravel. Riffles usually support a wider variety of bottom organisms than other stream sections.
Rill	A small intermittent watercourse with steep sides, usually only a few inches deep. Often rills are caused by an increase in surface water flow when soil is cleared of vegetation.
Riprap	A facing layer or protective mound of rocks placed to prevent erosion or sloughing of a structure or embankment due to flow of surface and stormwater runoff.
Riparian	Pertaining to the banks of streams, wetlands, lakes, or tidewater.
Riser	A vertical pipe extending from the bottom of a pond BMP that is used to control the discharge rate from a BMP for a specified design storm.
Road Related Project	A project whose objective is the construction or maintenance of a road. Roads built as a requirement for permit issuance are not included in this category.
Rodenticide	A substance used to destroy rodents.
Runoff	Water originating from rainfall and other precipitation that is found in drainage facilities, rivers, streams, springs, seeps, ponds, lakes and wetlands as well as shallow groundwater. As applied in this manual, it also means the portion of rainfall or other precipitation that becomes surface flow and interflow.
SCS	Soil Conservation Service (now the Natural Resources Conservation Service), U.S. Department of Agriculture
SCS Method	A single-event hydrologic analysis technique for estimating runoff based on the Curve Number method. The Curve Numbers are published by NRCS *in Urban Hydrology for Small Watersheds, 55 TR, June 1976*. With the change in name to the Natural Resource Conservation Service, the method may be referred to as the NRCS Method.
SEPA	See State Environmental Policy Act.
Salmonid	A member of the fish family Salmonidae. Chinook, coho, chum, sockeye and

Term	Definition
	pink salmon; cutthroat, brook, brown, rainbow, and steelhead trout; Dolly Varden, kokanee, and char are examples of salmonid species.
Sand filter	A man-made depression or basin with a layer of sand that treats stormwater as it percolates through the sand and is discharged via a central collector pipe
Saturation point	In soils, the point at which a soil or an aquifer will no longer absorb any amount of water without losing an equal amount.
Scour	Erosion of channel banks due to excessive velocity of the flow of surface and stormwater runoff.
Sediment	Fragmented material that originates from weathering and erosion of rocks or unconsolidated deposits, and is transported by, suspended in, or deposited by water.
Sedimentation	The depositing or formation of sediment.
Sensitive emergent vegetation communities	Assemblages of erect, rooted, herbaceous vegetation, excluding mosses and lichens, at least some of whose members have relatively narrow ranges of environmental requirements, such as hydroperiod, nutrition, temperature, and light. Examples include fen species such as sundew and, as well as a number of species of Carex (sedges).
Sensitive life stages	Stages during which organisms have limited mobility or alternatives in securing the necessities of life, especially including reproduction, rearing, and migration periods.
Sensitive scrub-shrub vegetation communities	Assemblages of woody vegetation less than 6 meters in height, at least some of whose members have relatively narrow ranges of environmental requirements, such as hydroperiod, nutrition, temperature, and light. Examples include fen species such as Labrador tea, bog laurel, and cranberry.
Settleable solids	Those suspended solids in stormwater that separate by settling when the stormwater is held in a quiescent condition for a specified time.
Sheet erosion	The relatively uniform removal of soil from an area without the development of conspicuous water channels.
Sheet flow	Runoff that flows over the ground surface as a thin, even layer, not concentrated in a channel.
Shoreline development	The proposed project as regulated by the Shoreline Management Act. Usually the construction over water or within a shoreline zone (generally 200 feet landward of the water) of structures such as buildings, piers, bulkheads, and breakwaters, including environmental alterations such as dredging and filling, or any project which interferes with public navigational rights on the surface waters.
Short circuiting	The passage of runoff through a BMP in less than the design treatment time.
Siltation	The process by which a river, lake, or other waterbody becomes clogged with sediment. Silt can clog gravel beds and prevent successful salmon spawning.
Site	The legal boundaries of a parcel or parcels of land that is (are) subject to new development or redevelopment. For road projects, the length of the project site and the right-of-way boundaries define the site.

Term	Definition
Slope	Degree of deviation of a surface from the horizontal; measured as a numerical ratio, percent, or in degrees. Expressed as a ratio, the first number is the horizontal distance (run) and the second is the vertical distance (rise), as 2:1. A 2:1 slope is a 50 percent slope. Expressed in degrees, the slope is the angle from the horizontal plane, with a 90° slope being vertical (maximum) and 45° being a 1:1 or 100 percent slope.
Sloughing	The sliding of overlying material. It is the same effect as caving, but it usually occurs when the bank or an underlying stratum is saturated or scoured.
Soil	The unconsolidated mineral and organic material on the immediate surface of the earth that serves as a natural medium for the growth of land plants. See also topsoil, engineered soil/landscape system, and properly functioning soil system.
Soil group, hydrologic	A classification of soils by the Soil Conservation Service into four runoff potential groups. The groups range from A soils, which are very permeable and produce little or no runoff, to D soils, which are not very permeable and produce much more runoff.
Soil horizon	A layer of soil, approximately parallel to the surface, which has distinct characteristics produced by soil-forming factors.
Soil profile	A vertical section of the soil from the surface through all horizons, including C horizons.
Soil structure	The relation of particles or groups of particles which impart to the whole soil a characteristic manner of breaking; some types are crumb structure, block structure, platy structure, and columnar structure.
Soil permeability	The ease with which gases, liquids, or plant roots penetrate or pass through a layer of soil.
Soil stabilization	The use of measures such as rock lining, vegetation or other engineering structures to prevent the movement of soil when loads are applied to the soil.
Soil Texture Class	The relative proportion, by weight, of particle sizes, based on the USDA system, of individual soil grains less than 2 mm equivalent diameter in a mass of soil. The basic texture classes in the approximate order of increasing proportions of fine particles include: sand, loamy sand, sandy loam, loam, silt loam, silt, clay loam, sandy clay, silty clay, and clay.
Sorption	The physical or chemical binding of pollutants to sediment or organic particles.
Source control BMP	A structure or operation that is intended to prevent pollutants from coming into contact with stormwater through physical separation of areas or careful management of activities that are sources of pollutants. This manual separates source control BMPs into two types. *Structural source control BMPs* are physical, structural, or mechanical devices or facilities that are intended to prevent pollutants from entering stormwater. *Operational BMPs* are non-structural practices that prevent or reduce pollutants from entering stormwater. See Volume 4 for details.

Term	Definition
Spill control device	A Tee section or turn down elbow designed to retain a limited volume of pollutant that floats on water, such as oil or antifreeze. Spill control devices are passive and must be cleaned-out for the spilled pollutant to actually be removed.
Spillway	A passage such as a paved apron or channel for surplus water over or around a dam or similar obstruction. An open or closed channel, or both, used to convey excess water from a reservoir. It may contain gates, either manually or automatically controlled, to regulate the discharge of excess water.
State Environmental Policy Act (SEPA) **RCW 43.21C**	The Washington State law intended to minimize environmental damage. SEPA requires that state agencies and local governments consider environmental factors when making decisions on activities, such as development proposals over a certain size and comprehensive plans. As part of this process, environmental documents are prepared and opportunities for public comment are provided.
Steep slope	Slopes of 40 percent gradient or steeper within a vertical elevation change of at least ten feet. A slope is delineated by establishing its toe and top, and is measured by averaging the inclination over at least ten feet of vertical relief. For the purpose of this definition: The toe of a slope is a distinct topographic break in slope that separates slopes inclined at less than 40% from slopes 40% or steeper. Where no distinct break exists, the toe of a steep slope is the lower-most limit of the area where the ground surface drops ten feet or more vertically within a horizontal distance of 25 feet; AND The top of a slope is a distinct topographic break in slope that separates slopes inclined at less than 40% from slopes 40% or steeper. Where no distinct break exists, the top of a steep slope is the upper-most limit of the area where the ground surface drops ten feet or more vertically within a horizontal distance of 25 feet.
Storage routing	A method to account for the attenuation of peak flows passing through a detention facility or other storage feature.
Storm drains	The enclosed conduits that transport surface and stormwater runoff toward points of discharge (sometimes called storm sewers).
Storm drain system	Refers to the system of gutters, pipes, streams, or ditches used to carry surface and stormwater from surrounding lands to streams, lakes, or Puget Sound.
Storm frequency	The time interval between major storms of predetermined intensity and volumes of runoff for which storm sewers and other structures are designed and constructed to handle hydraulically without surcharging and backflooding, e.g., a 2-year, 10-year or 100-year storm.
Storm sewer	A sewer that carries stormwater and surface water, street wash and other wash waters or drainage, but excludes sewage and industrial wastes. Also called a storm drain.
Stormwater	That portion of precipitation that does not naturally percolate into the ground or evaporate, but flows via overland flow, interflow, pipes and other features of a stormwater drainage system into a defined surface waterbody, or a constructed infiltration facility.

Term	Definition
Stormwater drainage system	Constructed and natural features which function together as a system to collect, convey, channel, hold, inhibit, retain, detain, infiltrate, divert, treat or filter stormwater.
Stormwater facility	A constructed component of a stormwater drainage system, designed or constructed to perform a particular function, or multiple functions. Stormwater facilities include, but are not limited to, pipes, swales, ditches, culverts, street gutters, detention ponds, retention ponds, constructed wetlands, infiltration devices, catch basins, oil/water separators, and biofiltration swales.
Stormwater Management Manual for Western Washington (Stormwater Manual)	The manual prepared by Ecology which contains BMPs to prevent, control or treat pollution in stormwater and reduce other stormwater-related impacts to waters of the State. The Stormwater Manual is intended to provide guidance on measures necessary in western Washington to control the quantity and quality of stormwater runoff from new development and redevelopment. This manual is equivalent to the Ecology manual and must be used for projects located within the City of Auburn.
Stormwater Program	Either the Basic Stormwater Program or the Comprehensive Stormwater Program (as appropriate to the context of the reference) called for under the Puget Sound Water Quality Management Plan
Stormwater Site Plan	The comprehensive report containing all of the technical information and analysis necessary for regulatory agencies to evaluate a proposed new development or redevelopment project for compliance with stormwater requirements. Contents of the Stormwater Site Plan will vary with the type and size of the project, and individual site characteristics. It includes a Construction Stormwater Pollution Prevention Plan (Construction SWPPP) and a Permanent Stormwater Control Plan (PSC Plan). Guidance on preparing a Stormwater Site Plan is contained in Volume 1, Chapter 4.
Stream gauging	The quantitative determination of stream flow using gages, current meters, weirs, or other measuring instruments at selected locations. See Gauging station.
Streambanks	The usual boundaries, not the flood boundaries, of a stream channel. Right and left banks are named facing downstream.
Streams	Those areas where surface waters flow sufficiently to produce a defined channel or bed. Lands and waters contained within a channel which supports hydrophytes and where the substrate is predominantly undrained hydric soils, nonsoil and/or is saturated with water or covered by water each growing season. The channel or bed need not contain water year-round. This definition is not meant to include irrigation ditches, canals, stormwater runoff devices or other entirely artificial watercourses unless they are used to convey streams naturally occurring prior to construction. Those topographic features that resemble streams but have no defined channels (i.e. swales) shall be considered streams when hydrologic and hydraulic analyses done pursuant to a development proposal predict formation of a defined channel after development.
Structure	A catch basin or manhole in reference to a storm drainage system.

Term	Definition
Structural source control BMPs	Physical, structural, or mechanical devices or facilities that are intended to prevent pollutants from entering stormwater. Structural source control BMPs typically include: • Enclosing and/or covering the pollutant source (building or other enclosure, a roof over storage and working areas, temporary tarp, etc.). • Segregating the pollutant source to prevent run-on of stormwater, and to direct only contaminated stormwater to appropriate treatment BMPs.
Stub-out	A short length of pipe provided for future connection to a storm drainage system.
Subbasin	A drainage area that drains to a water-course or waterbody named and noted on common maps and which is contained within a basin.
Subcatchment	A subdivision of a drainage basin (generally determined by topography and pipe network configuration).
Subdrain	A pervious backfilled trench containing stone or a pipe for intercepting groundwater or seepage.
Subgrade	A layer of stone or soil used as the underlying base for a BMP.
Subsoil	The B horizons of soils with distinct profiles. In soils with weak profile development, the subsoil can be defined as the soil below the plowed soil (or its equivalent of surface soil), in which roots normally grow. Although a common term, it cannot be defined accurately. It has been carried over from early days when "soil" was conceived only as the plowed soil and that under it as the "subsoil."
Substrate	The natural soil base underlying a BMP.
Surcharge	The flow condition occurring in closed conduits when the hydraulic grade line is above the crown of the sewer.
Surface and stormwater	Water originating from rainfall and other precipitation that is found in drainage facilities, rivers, streams, springs, seeps, ponds, lakes, and wetlands as well as shallow groundwater.
Surface and stormwater management system	Drainage facilities and any other natural features that collect, store, control, treat and/or convey surface and stormwater.
Suspended solids	Organic or inorganic particles that are suspended in and carried by the water. The term includes sand, mud, and clay particles (and associated pollutants) as well as solids in stormwater.
Swale	A shallow drainage conveyance with relatively gentle side slopes, generally with flow depths less than one foot.
Terrace	An embankment or combination of an embankment and channel across a slope to control erosion by diverting or storing surface runoff instead of permitting it to flow uninterrupted down the slope.

Term	Definition
Threshold Discharge Area	An onsite area draining to a single natural discharge location or multiple natural discharge locations that converge within one-quarter mile downstream (as determined by the shortest flowpath). The examples in Figure ***1*** illustrate this definition. 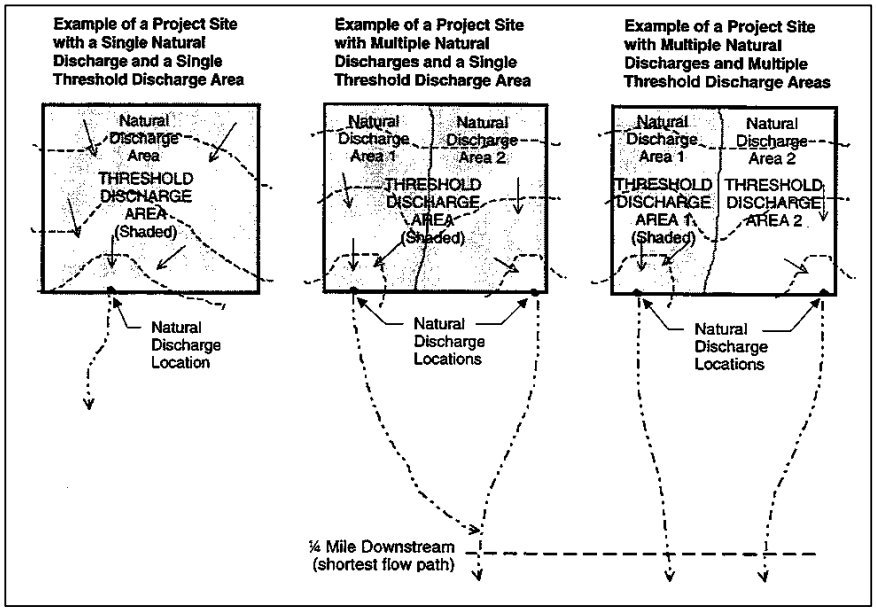 ***Figure 1. Threshold Discharge Area*** The purpose of this definition is to clarify how the thresholds of this manual are applied to project sites with multiple discharge points.
Tightline	A continuous length of pipe that conveys water from one point to another (typically down a steep slope) with no inlets or collection points in between.
Tile, Drain	Pipe made of burned clay, concrete, or similar material, in short lengths, usually laid with open joints to collect and carry excess water from the soil.
Tile drainage	Land drainage by means of a series of tile lines laid at a specified depth and grade.
Till	A layer of poorly sorted soil deposited by glacial action that generally has very low infiltration rates.
Time of concentration	The time period necessary for surface runoff to reach the outlet of a subbasin from the hydraulically most remote point in the tributary drainage area.
Topography	General term to include characteristics of the ground surface such as plains, hills, mountains, degree of relief, steepness of slopes, and other physiographic features.

Term	Definition
Topsoil	Topsoil shall be per ASTM D5268 standard specification, and water permeability shall be 0.6 inches per hour or greater. Organic matter shall have not more than 10 percent of nutrients in mineralized water-soluble forms. Topsoil shall not have phytotoxic characteristics.
Total dissolved solids	The dissolved salt loading in surface and subsurface waters.
Total Petroleum Hydrocarbons (TPH)	A large family of chemical compounds that come from crude oil. Two types important to stormwater include: • TPH-Gx: The qualitative and quantitative method (extended) for volatile ("gasoline") petroleum products in water; and • TPH-Dx: The qualitative and quantitative method (extended) for semi-volatile ("diesel") petroleum products in water.
Total solids	The solids in water, sewage, or other liquids, including the dissolved, filterable, and nonfilterable solids. The residue left when the moisture is evaporated and the remainder is dried at a specified temperature, usually 130°C.
Total suspended solids	That portion of the solids carried by stormwater that can be captured on a standard glass filter.
Total Maximum Daily Load (TMDL) – Water Cleanup Plan	A calculation of the maximum amount of a pollutant that a waterbody can receive and still meet water quality standards, and an allocation of that amount to the pollutant's sources. A TMDL (also known as a Water Cleanup Plan) is the sum of the allowable loads of a single pollutant from all contributing point and nonpoint sources. The calculation must include a margin of safety to ensure that the waterbody can be used for the purposes the State has designated. The calculation must also account for seasonable variation in water quality. Water quality standards are set by states, territories, and tribes. They identify the uses for each waterbody, for example, drinking water supply, contact recreation (swimming), and aquatic like support (fishing), and the scientific criteria to support that use. The Clean Water Act, Section 303, establishes the water quality standards and TMDL programs.
Toxic	Poisonous, carcinogenic, or otherwise directly harmful to life.
Tract	A legally created parcel of property designated for special nonresidential and noncommercial uses.
Trash rack	A structural device used to prevent debris from entering a spillway or other hydraulic structure.
Travel time	The estimated time for surface water to flow between two points of interest.
Treatment BMP	A BMP that is intended to remove pollutants from stormwater. A few examples of treatment BMPs are detention ponds, oil/water separators, biofiltration swales, and constructed wetlands.
Treatment liner	A layer of soil that is designed to slow the rate of infiltration and provide sufficient pollutant removal so as to protect groundwater quality.
Treatment train	A combination of two or more treatment facilities connected in series.

Term	Definition
Trunk main	Public stormwater drainage pipes equal to or greater than 36 inches and installed at a minimum slope of 0.5% Some 36-inch mains may be installed at less than the minimum slope. These shall not be considered trunk mains.
Turbidity	Dispersion or scattering of light in a liquid, caused by suspended solids and other factors; commonly used as a measure of suspended solids in a liquid.
Underdrain	Plastic pipes with holes drilled through the top, installed on the bottom of an infiltration BMP, which are used to collect and remove excess runoff.
Undisturbed buffer	A zone where development activity shall not occur, including logging, and/or the construction of utility trenches, roads, and/or surface and stormwater facilities.
Undisturbed low gradient uplands	Forested land, sufficiently large and flat to infiltrate surface and storm runoff without allowing the concentration of water on the surface of the ground.
Unstable slopes	Those sloping areas of land which have in the past exhibited, are currently exhibiting, or will likely in the future exhibit, mass movement of earth.
Unusual biological community types	Assemblages of interacting organisms that are relatively uncommon regionally.
Urbanized area	Areas designated and identified by the U.S. Bureau of Census according to the following criteria: an incorporated place and densely settled surrounding area that together have a maximum population of 50,000.
U.S. EPA	The United States Environmental Protection Agency.
Values	Wetland processes or attributes that are valuable or beneficial to society (also see Functions). Wetland values include support of commercial and sport fish and wildlife species, protection of life and property from flooding, recreation, education, and aesthetic enhancement of human communities.
Variance	See Exception.
Vegetated flowpath	A route with established vegetation measured from the downspout or dispersion system discharge point to the downstream property line, stream, wetland or other impervious surface. For flow credits, this path must contain undisturbed native landscape or lawn landscape meeting BMP L613: Post Construction Soil Quality and Depth.
Vegetation	All organic plant life growing on the surface of the earth.
Waterbody	Surface waters including rivers, streams, lakes, marine waters, estuaries, and wetlands.
Water Cleanup Plan	See Total Maximum Daily Load.
Water quality	A term used to describe the chemical, physical, and biological characteristics off water, usually in respect to its suitability for a particular purpose.
Water quality design storm	The 24-hour rainfall amount with a 6-month return frequency. Commonly referred to as the 6-month, 24-hour storm.

Term	Definition
Water quality standards	Minimum requirements of purity of water for various uses; for example, water for agricultural use in irrigation systems should not exceed specific levels of sodium bicarbonate, pH, total dissolved salts, etc. In Washington, the Department of Ecology sets water quality standards.
Watershed	A geographic region within which water drains into a particular river, stream, or body of water. Watersheds can be as large as those identified and numbered by the State of Washington Water Resource Inventory Areas (WRIAs) as defined in Chapter 173-500 WAC.
Water table	The upper surface or top of the saturated portion of the soil or bedrock layer, indicates the uppermost extent of groundwater.
Weir	Device for measuring or regulating the flow of water.
Weir notch	The opening in a weir for the passage of water.
Wetlands	Those areas that are inundated or saturated by surface or groundwater at a frequency and duration sufficient to support, and that under normal circumstances do support, a prevalence of vegetation typically adapted for life in saturated soil conditions. Wetlands generally include swamps, marshes, bogs, and similar areas. Wetlands do not include those artificial wetlands intentionally created from nonwetland sites, including, but not limited to, irrigation and drainage ditches, grass-lined swales, canals, detention facilities, wastewater treatment facilities, farm ponds, and landscape amenities, or those wetlands created after July 1, 1990, that were unintentionally created as a result of the construction of a road, street, or highway. Wetlands may include those artificial wetlands intentionally created from nonwetland areas to mitigate the conversion of wetlands. (Waterbodies not included in the definition of wetlands as well as those mentioned in the definition are still waters of the state.)
Wetland edge	Delineation of the wetland edge shall be based on the U.S. Army Corps of Engineers Wetlands Delineation Manual, Technical Report Y-87-1, U.S. Army Engineers Waterways Experiment Station, Vicksburg, Miss. (1987)
Wetponds and wetvaults	Drainage facilities for water quality treatment that contain permanent pools of water that are filled during the initial runoff from a storm event. They are designed to optimize water quality by providing retention time in order to settle out particles of fine sediment to which pollutants such as heavy metals absorb, and to allow biologic activity to occur that metabolizes nutrients and organic pollutants
Zoning ordinance	An ordinance based on the police power of government to protect the public health, safety, and general welfare. It may regulate the type of use and intensity of development of land and structures to the extent necessary for a public purpose. Requirements may vary among various geographically defined areas called zones. Regulations generally cover such items as height and bulk of buildings, density of dwelling units, off-street parking, control of signs, and use of land for residential, commercial, industrial, or agricultural purposes. A zoning ordinance is one of the major methods for implementation of a comprehensive plan.

References

General References

Azous, A.L. and Horner R.R., "Wetlands and Urbanization, Implications for the Future," Final Report of the Puget Sound Wetlands and Stormwater Management Research Program, 1997.

Booth, Derek B. and Jackson, C. Rhett, "Urbanization of Aquatic Systems: Degradation Thresholds, Stormwater Detection, and the Limits of Mitigation," *Journal of the American Water Resources Association*, October 1997

Herrera, 1993 Cost Analysis – Washington Department of Ecology Minimum Requirements for Stormwater Management, Herrera Environmental Consultants/Ecology, 1993

Hydrosphere Data Products, Inc., CD-ROM Hydrodata, USGS Daily and Peak Values

Issaquah Creek Basin and Nonpoint Action Plan, King County Surface Water Management Division, Dec. 1996.

Karr, J.R., "Biological Integrity: A Long-Neglected Aspect of Water Resources Management," *Ecological Applications* 1(1):66-84, 1991.

Kleindl, W., A Benthic Index of Biotic Integrity for Puget Sound Lowland Streams, Masters Thesis, University of Washington, Seattle, Washington. 68 pp., 1995

Langbein, W.B., "Annual Floods and the Partial-Duration Flood Series," Transactions American Geophysical Union, Vol. 30, pp. 879-881, 1949.

Lucchetti, G. and Fuerstenberg, R., "Relative Fish Use in Urban and Non-Urban Streams," *Proceedings of the Conference on Wild Salmon*, Vancouver, B.C., 1993.

May Christopher, et al, "Effects of Urbanization on Small Streams in the Puget Sound Lowland Ecoregion," *Watershed Protection Techniques*, Vol. 2, No. 4, June 1997.

Miller, J.F., Frederick, R.H. and Tracey, R.S., NOAA ATLAS 2, Precipitation - Frequency Atlas of the Western United States, Volume IX - Washington, U.S. Dept. of Commerce, NOAA, National Weather Service, Washington, D.C., 1973.

Perrich, Jerry R., The ESE National Precipitation Databook, Cahners Publishing Co., 1992.

Puget Sound Water Quality Management Plan, Puget Sound Water Quality Authority, 1987, 1989, 1991, 1994

Schaefer, M.G., "Regional Analyses of Precipitation Annual Maxima in Washington State," Water Resources Research, Vol. 26, No. 1 pp. 119-132, January 1990.

Schaefer, M.G., Technical Note 3: Design Storm Construction, Dam Safety Guidelines, Washington State Department of Ecology, publication 92-55G, April 1993.

Strecker, Eric W., et al, Analysis of Oregon Urban Runoff Water Quality Monitoring Data Collected From 1990 to 1996, The Oregon Association of Clean Water Agencies, 1997.

Tri-County Road Maintenance ESA Technical Working Group, under the Tri-County ESA Response Effort (King, Pierce, Snohomish and other municipalities and entities in Washington State), Regional Road Maintenance Endangered Species Act – Program Guidelines, under final review 2002.

References for Western Washington Hydrology Model

Beyerlein, D.C. 1996. Effective Impervious Area: The Real Enemy. Presented at the Impervious Surface Reduction Research Symposium, The Evergreen State College. Olympia, WA.

Bicknell, B.R., J.C. Imhoff, J.L. Kittle Jr, A.S. Donigian Jr, and R.C. Johanson. 1997. Hydrological Simulation Program – Fortran User's Manual for Version 11. EPA/600/R-97/080. National Exposure Research Laboratory. Office of Research and Development. U.S. Environmental Protection Agency. Research Triangle Park, NC.

Dinicola, R.S. 1990. Characterization and Simulation of Rainfall-Runoff Relations for Headwater Basins in Western King and Snohomish Counties, Washington. Water-Resources Investigations Report 89-4052. U.S. Geological Survey. Tacoma, WA.

King County. 1998. Surface Water Design Manual. Department of Natural Resources. Seattle, WA.

United States Water Resources Council. 1981. Guidelines for Determining Flood Flow Frequency. Bulletin #17B of the Hydrology Committee. Washington, DC.

Resource Materials – Management of Street Wastes

Austin, City of, Removal Efficiencies of Stormwater Control Structures. Environmental and Conservation Services Department, 1990.

City of Portland Vactor Waste Decant Data, Personal Communication with Katie Bretsch, April 2000.

Campbell, Robert, Street Waste Characterization Testing Program, VTP-1, Snohomish County Public Works Maintenance & Operations Division, March 1994.

Collins, Jay, Oregon Department of Transportation, Street Waste Issues and Options FHWA-OR-RD-99-05, July 1998.

Ecology, Interim TPH Policy, Publication N. ECY 97-600, 1997.

Ecology, Analytical Methods for Petroleum Hydrocarbons, Publication No. ECY 97-602, June 1997.

Ecology, Dangerous Waste Regulations, Chapter 173-303 WAC.

Ecology, Discussion Draft - Recommendations for Management of Street Waste, June 1999.

Ecology, Guidance for Remediation of Petroleum Contaminated Soils, pub 91-30, 1994.

Ecology, Model Toxics Control Act (MTCA) Cleanup Regulations, Chapter 173-340 WAC.

Ecology, Solid Waste Handling Standards, Chapter 173-350 WAC.

Ecology, Water Quality Standards For Surface Waters of the State of Washington, Chapter 173-201A.

Hazardous Waste Management Act of 1976, Chapter 70.105 RCW.

Herrera Environmental Consultants, Inc., King County Maintenance Waste Disposal Characterization Study, prepared for King County Surface Water Management Division, January Draft, 1995.

Herrera Environmental Consultants, Inc., Street Truck Operations and Disposal Practices, 1991.

Holz, Thomas, Street Waste Disposal, Thurston County, Washington: Final Engineering Report and One Year Certification, Grant No. Tzx 91-129, May, 1994.

Jacobson, Michael, Data Summary of Catch Basin and Vactor Waste Contamination in Washington State, Final Report, Center for Urban Water Resources, University of Washington, 1993.

King County, Vactor Waste Disposal Plan, King County Surface Water Management Division, Water Quality Unit, 1994.

King County's Renton Facility Decant Data, Personal Correspondence with Jerry Creek, and Susan Turner, June 1999.

Landau Associates, Inc. Snohomish County Street Waste Characterization, Final Report, December 1995.

Pitt, R. and P. Bissonnette, Bellevue Urban Runoff Program; Summary Report, Prepared for City of Bellevue Storm and Surface Water Utility,1984.

Pitt, R., 1985, Characterizing and Controlling Urban Runoff through Street and Sewer Cleaning, EPA/600/2-85/038.

Pond, Rodney, South Base Pond Report - The Response of Wetland Plants to Stormwater Runoff From a Transit Base, Municipality of Metropolitan Seattle Publication 775, 1993.

Schueler, Thomas R., Pollutant Dynamics of Pond Muck, Wat. Prot. Techniques, 1 (2). Summer 1994.

Serdar, Dave, Ecology, Contaminants in Vactor Truck Wastes, April 1993.

Thurston County Environmental Health Division, (Environmental Health Division-Unpublished data), 1993

Thurston County Environmental Health Division, Report on Street Facility Monitoring Grant Tax No. 91-129, April 1993.

TYMCO, Inc., Best Management Practices - Street Sweeping, Waco, Texas, 1993.

US Environmental Protection Agency, Test Methods for Evaluating Solid Wastes, (SW-846), 3rd Edition, 1986.

W&H Pacific, Inc., Street and Street Sweeping Waste Characteristics Snohomish County, Washington, February 1994.

Resource Materials –

Association of General Contractors of Washington, Field Manual for Sediment/Erosion Control Best Management Practices. 2002.

Center for Watershed Protection, Ellicott City, Maryland. 2005.

King County. Surface Water Design Manual. 2005.

Pierce County. Stormwater Pollution Prevention Manual. 2005.

Washington State Department of Ecology, Stormwater Management Manual for Western Washington, 2005.